Critical Release Notice

Publication number: 297-8021-547
Publication release: Standard 17.07

The content of this customer NTP supports the SN08 (DMS) software release.

Bookmarks used in this NTP highlight the changes between the NA015 baseline and the current release. The bookmarks provided are color-coded to identify release-specific content changes. NTP volumes that do not contain bookmarks indicate that the NA015 baseline remains unchanged and is valid for the current release.

Bookmark Color Legend

Black: Applies to content for the NA015 baseline that is valid through the current release.

Red: Applies to new or modified content for NA017 that is valid through the current release.

Blue: Applies to new or modified content for NA018 (SN05 DMS) that is valid through the current release.

Green: Applies to new or modified content for SN06 (DMS) that is valid through the current release.

Purple: Applies to new or modified content for SN07 (DMS) that is valid through the current release.

Pink: Applies to new or modified content for SN08 (DMS) that is valid through the current release.

Attention!
Adobe® Acrobat® Reader™ 5.0 or higher is required to view bookmarks in color.

Publication History

March 2005

Standard release 17.07 for software release SN08 (DMS). No changes have been made for SN08 (DMS) features.

Volume 7

New procedure – Backplane replacement, "NTRX4002 in NTRX40AA" due to CR Q01166307.

March 2005

Standard release 17.06 for software release SN08 (DMS). This release is current for the SN08 (DMS) software release, although no changes have been made for SN08 (DMS) features.

Volume 3

Modified procedure – Replacing processor and memory cards in an XPM (step 26). This change corrects the re-direction from step 26, and is due to CR Q01047311.

December 2004

Standard release 17.05 for software release SN07 (DMS).

Volume 7

New procedure for CR Q00840334 – NTMX82 in a DTCO2

September 2004

Standard release 17.04 for software release SN07 (DMS). This release is current for the SN07 (DMS) software release, although no changes have been made for SN07 (DMS) features.

Volume 2

Modified procedure - Bus interface cards in an LCD
Modified procedure - NTBX71 in an LCME
Modified procedure - NT9X30 in an LPP LIS

Volume 3

Modified procedure - NT2X70 in an XPM

Volumes 5

All of the changes below are due to CR Q00855532:

Modified procedure - NT6X40 in an SMA
Modified procedure - NT6X40 in an SMA-MVI-20
Modified procedure - NT6X40 in an SMA2

Modified procedure - NT6X40 in an SMS
Modified procedure - NT6X40 in an SMU

March 2004

Standard release 17.03 for software release SN06 (DMS). Updates made for this release are shown below:

Volume 1

Modified card replacement procedure: Power converter cards in a SuperNode SE 16k ENET - Card NT9X30AB is Manufacture Discontinued and is replaced by new card NT9X30AC (Note - there is a bookmark for each changed reference).

Volume 2

No changes

Volume 3

Modified card replacement procedure: Power converter cards in trunk and service modules.

Volumes 4 - 7

No changes

September 2003

Standard release 17.02 for software release SN06 (DMS). Updates made for this release are shown below:

Volume 1

Modified card replacement procedure: Power converter cards in a Supernode SE CM/SLM.

Volume 2

Modified card replacement procedure: NT6X30 in LCE-type frames.

Volumes 3 - 7

No changes

June 2003

Preliminary release 17.01 for software release SN06 (DMS). Updates for this release are shown below:

Volume 1

No changes

Volume 2

No changes

Volume 3

Added new card replacement procedure: SPM NTLX99BA STM-1 for DMS Spectrum Peripheral Module.

Volumes 4 - 7

No changes

297-8021-547

DMS-100 Family

North American DMS-100

Card Replacement Procedures

Volume 4 of 7

LET0015 and up Standard 14.02 May 2001

NORTEL NETWORKS™

DMS-100 Family

North American DMS-100

Card Replacement Procedures

Volume 4 of 7

Publication number: 297-8021-547
Product release: LET0015 and up
Document release: Standard 14.02
Date: May 2001

Copyright © 1996-2001 Nortel Networks,
All Rights Reserved

Printed in the United States of America

NORTEL NETWORKS CONFIDENTIAL: The information contained herein is the property of Nortel Networks and is strictly confidential. Except as expressly authorized in writing by Nortel Networks, the holder shall keep all information contained herein confidential, shall disclose the information only to its employees with a need to know, and shall protect the information, in whole or in part, from disclosure and dissemination to third parties with the same degree of care it uses to protect its own confidential information, but with no less than reasonable care. Except as expressly authorized in writing by Nortel Networks, the holder is granted no rights to use the information contained herein.

Information is subject to change without notice. Nortel Networks reserves the right to make changes in design or components as progress in engineering and manufacturing may warrant. Changes or modification to the DMS-100 without the express consent of Nortel Networks may void its warranty and void the user's authority to operate the equipment.

Nortel Networks, the Nortel Networks logo, the Globemark, How the World Shares Ideas, Unified Networks, DMS, DMS-100, Helmsman, MAP, Meridian, Nortel, Northern Telecom, NT, SuperNode, and TOPS are trademarks of Nortel Networks.

Contents

Card Replacement Procedures
Volume 4 of 7

NTP Summary Contents vii

1 XPM card replacement procedures 1-1

NT0X10 in an IOPAC RMM 1-2
NT0X10 in an OPM RMM 1-6
NT0X10 in an RLCM-EDC RMM 1-10
NT0X10 in an RLCM RMM 1-14
NT0X10 in an RSC RMM 1-18
NT0X10 in an RSC-S (DS-1) Model A RMM 1-25
NT0X10 in an RSC-S (DS-1) Model B RMM 1-31
NT0X10 in an RSC-S (PCM-30) Model A RMM 1-37
NT0X10 in an RSC-S (PCM-30) Model B RMM 1-43
NT0X91 in an IOPAC FSP 1-49
NT0X91 in an RLCM 1-61
NT0X91 in an RSC 1-74
NT0X91AA in an OPM 1-90
NT0X91AE in an OPM 1-96
NT0X91AE in an RLCE 1-105
NT2X06 in an IOPAC RMM 1-114
NT2X06 in an OPM RMM 1-121
NT2X06 in an RLCM RMM 1-129
NT2X06 in an RSC RMM 1-136
NT2X06 in an RSC-S (DS-1) Model A RMM 1-144
NT2X06 in an RSC-S (DS-1) Model B RMM 1-153
NT2X06 in an RSC-S (PCM-30) Model A RMM 1-162
NT2X09 in an IOPAC RMM 1-171
NT2X09 in an OPM RMM 1-178
NT2X09 in an RLCM RMM 1-186
NT2X09 in an RSC RMM 1-194
NT2X09 in an RSC-S (DS-1) Model A RMM 1-202
NT2X09 in an RSC-S (DS-1) Model B RMM 1-211
NT2X09 in an RSC-S (PCM-30) Model A RMM 1-220
NT2X10 in an OPM RMM 1-229
NT2X10 in an RLCM RMM 1-233
NT2X10 in an RSC RMM 1-237

NT2X10 in an RSC-S (DS-1) Model A RMM 1-244
NT2X10 in an RSC-S (DS-1) Model B RMM 1-251
NT2X10 in an RSC-S (PCM-30) Model A RMM 1-258
NT2X11 in an OPAC RMM 1-265
NT2X11 in an OPM RMM 1-270
NT2X11 in an RLCM-EDC RMM 1-274
NT2X11 in an RLCM RMM 1-278
NT2X11 in an RSC RMM 1-282
NT2X11 in an RSC-S (DS-1) Model A RMM 1-289
NT2X11 in an RSC-S (DS-1) Model B RMM 1-298
NT2X11 in an RSC-S (PCM-30) Model A RMM 1-307
NT2X48 in an IOPAC RMM 1-316
NT2X48 in an OPM RMM 1-321
NT2X48 in an RLCM RMM 1-326
NT2X55 in an RSC RMM 1-331
NT2X57 in an IOPAC RMM 1-338
NT2X57 in an OPM RMM 1-342
NT2X57 in an RLCM-EDC RMM 1-346
NT2X57 in an RLCM RMM 1-350
NT2X57 in an RSC RMM 1-355
NT2X57 in an RSC-S (DS-1) Model A RMM 1-362
NT2X57 in an RSC-S (DS-1) Model B RMM 1-369
NT2X57 in an RSC-S (PCM-30) Model A RMM 1-376
NT2X59 in an IOPAC RMM 1-383
NT2X59 in an OPM RMM 1-387
NT2X59 in an RLCM-EDC RMM 1-394
NT2X59 in an RLCM RMM 1-401
NT2X59 in an RSC RMM 1-406
NT2X59 in an RSC-S (DS-1) Model A RMM 1-413
NT2X59 in an RSC-S (DS-1) Model B RMM 1-420
NT2X59 in an RSC-S (PCM-30) Model A RMM 1-427
NT2X70 in an IOPAC HIE 1-434
NT2X70 in an OPM HIE 1-441
NT2X70 in an RLCM-EDC HIE 1-455
NT2X70 in an RLCM HIE 1-464
NT2X70 in an RSC 1-478
NT2X70 in an SMA 1-490
NT2X70 in an SMA-MVI-20 1-498
NT2X70 in an SMS 1-506
NT2X70 in an SMS-R 1-517
NT2X70 in an SMU 1-526
NT2X90 in an IOPAC RMM 1-533
NT2X90 in an OPAC RMM 1-538
NT2X90 in an OPM RMM 1-543
NT2X90 in an RLCM-EDC RMM 1-551
NT2X90 in an RLCM RMM 1-557
NT2X90 in an RSC RMM 1-562
NT2X90 in an RSC-S (DS-1) Model A RMM 1-569
NT2X90 in an RSC-S (DS-1) Model B RMM 1-576
NT3X04 in an RSC RMM 1-583
NT3X09 in an IOPAC RMM 1-590

NT3X09 in an OPAC RMM 1-596
NT3X09 in an OPM RMM 1-601
NT3X09 in an RLCM-EDC RMM 1-607
NT3X09 in an RLCM RMM 1-612
NT3X09 in an RSC RMM 1-617
NT3X09 in an RSC-S (DS-1) Model A RMM 1-624
NT3X09 in an RSC-S (DS-1) Model B RMM 1-634
NT3X09 in an RSC-S (PCM-30) Model B RMM 1-644
NT3X82 in an RSC RMM 1-653
NT3X83 in an RSC RMM 1-660
NT4X97 in an IOPAC RMM 1-668
NT4X97 in an RSC-S (PCM-30) Model A RMM 1-673
NT4X97 in an RSC-S (PCM-30) Model B RMM 1-680
NT4X98 in an IOPAC RMM 1-687
NT4X98 in an RSC-S (PCM-30) Model B RMM 1-694
NT6X17 in an IOPAC ILCM 1-703
NT6X17 in an OPM 1-707
NT6X17 in an RLCM 1-711
NT6X17 in an RSC LCM 1-715
NT6X17 in an RSC-S (DS-1) Model A LCME 1-723
NT6X17 in an RSC-S (DS-1) Model B LCME 1-731
NT6X17 in a STAR or RLD 1-739
NT6X18 in an IOPAC ILCM 1-743
NT6X18 in an OPAC LCM 1-747
NT6X18 in an OPM 1-751
NT6X18 in an RLCM 1-755
NT6X18 in an RSC LCM 1-759
NT6X18 in an RSC-S (DS-1) Model A LCME 1-767
NT6X18 in an RSC-S (DS-1) Model B LCME 1-775
NT6X18 in a STAR or RLD 1-783
NT6X19 in an IOPAC ILCM 1-787
NT6X19 in an OPM 1-791
NT6X19 in an RLCM 1-795
NT6X19 in an RSC LCM 1-799
NT6X19 in an RSC-S (DS-1) Model A LCME 1-807
NT6X19 in an RSC-S (DS-1) Model B LCME 1-815
NT6X19 in a STAR or RLD 1-823
NT6X20 in an IOPAC ILCM 1-827
NT6X20 in an OPM 1-831
NT6X20 in an RLCM 1-835
NT6X20 in an RSC LCM 1-839
NT6X20 in an RSC-S (DS-1) Model A LCME 1-847
NT6X20 in an RSC-S (DS-1) Model B LCME 1-855
NT6X20 in a STAR or RLD 1-863
NT6X21 in an IOPAC ILCM 1-867
NT6X21 in an OPM 1-871
NT6X21 in an RLCM 1-875
NT6X21 in an RLCM-EDC LCM 1-879
NT6X21 in an RSC-S (DS-1) Model A LCME 1-883
NT6X21 in an RSC-S (DS-1) Model B LCME 1-893
NT6X21 in an RSC-S (PCM-30) Model A LCME 1-902

NT6X21 in an RSC-S (PCM-30) Model B LCME 1-911
NT6X21 in a STAR or RLD 1-920
NT6X27 in an IOPAC HIE 1-924
NT6X27 in an OPM HIE 1-931
NT6X27 in an RLCM HIE 1-938
NT6X30 in an RSC LCM 1-945
NT6X30 in an RSC-S (DS-1) Model A LCME 1-960
NT6X30 in an RSC-S (DS-1) Model B LCME 1-974
NT6X30 in an RSC-S (PCM-30) Model A LCME 1-988
NT6X30 in an RSC-S (PCM-30) Model B LCME 1-1002
NT6X36 in an IOPAC FSP 1-1016
NT6X36 in an OPM 1-1021
NT6X36 in an RLCM-EDC FSP 1-1026
NT6X36 in an RLCM FSP 1-1031
NT6X36 in an RSC-S FSP for CRSC or CEXT 1-1036

NTP Summary Contents

Card Replacement Procedures
Volume 1 of 7

About this document **Vol. 1, xxvii**

How to check the version and issue of this document Vol. 1, xxvii
References in this document Vol. 1, xxvii
What precautionary messages mean Vol. 1, xxviii
How commands, parameters, and responses are represented Vol. 1, xxix
Input prompt (>) Vol. 1, xxix
Commands and fixed parameters Vol. 1, xxix
Variables Vol. 1, xxix
Responses Vol. 1, xxix

1 Breaker interface panel card replacement procedures **Vol. 1, 1-1**

Introduction Vol. 1, 1-1
Application Vol. 1, 1-1
Common procedures Vol. 1, 1-1
Action Vol. 1, 1-1
Recording card replacement activities Vol. 1, 1-2
Circuit breaker in a BIP Vol. 1, 1-3
NTNY24 in a BIP Vol. 1, 1-7
NTNY25 in a BIP Vol. 1, 1-11

2 SuperNode computing module card replacement procedures **Vol. 1, 2-1**

Introduction Vol. 1, 2-1
Application Vol. 1, 2-1
Common procedures Vol. 1, 2-1
Action Vol. 1, 2-2
Recording card replacement activities Vol. 1, 2-2
SuperNode CM shelf layouts Vol. 1, 2-3
NT9X20 in a SuperNode CM Vol. 1, 2-5
System cards in a SuperNode CM Vol. 1, 2-22

3 SuperNode SE computing module and system load module card replacement procedures Vol. 1, 3-1

Introduction Vol. 1, 3-1
Application Vol. 1, 3-1
Common procedures Vol. 1, 3-1
Action Vol. 1, 3-2
Recording card replacement activities Vol. 1, 3-2
SuperNode SE CM/SLM shelf layouts Vol. 1, 3-3
NT9X44 in a SuperNode SE CM/SLM Vol. 1, 3-5
NT9X46 in a SuperNode SE CM/SLM Vol. 1, 3-27
NT9X62 in a SuperNode SE CM/SLM Vol. 1, 3-45
Power converter cards in a SuperNode SE CM/SLM Vol. 1, 3-67
Replace system cards in a SuperNode SE CM/SLM Vol. 1, 3-85

4 Digital carrier module card replacement procedures Vol. 1, 4-1

Introduction Vol. 1, 4-1
Application Vol. 1, 4-1
Common procedures Vol. 1, 4-1
Action Vol. 1, 4-1
Recording card replacement activities Vol. 1, 4-2
DCM shelf layouts Vol. 1, 4-3
Control complex cards in a digital carrier module Vol. 1, 4-8
NT2X35 in a digital carrier module Vol. 1, 4-13
NT2X36 in a digital carrier module Vol. 1, 4-27
NT3X65 in a digital echo suppressor Vol. 1, 4-37
Power converter cards in a digital carrier module Vol. 1, 4-47

5 Enhanced link peripheral processor card replacement procedures Vol. 1, 5-1

Introduction Vol. 1, 5-1
Application Vol. 1, 5-1
Common procedures Vol. 1, 5-1
Action Vol. 1, 5-1
Recording card replacement activities Vol. 1, 5-2
ELPP shelf layouts Vol. 1, 5-3
Common fill paddle boards in an ELPP LIS Vol. 1, 5-9
HLIU cards in an ELPP LIS Vol. 1, 5-17
HSLR cards in an ELPP LIS Vol. 1, 5-27
NT9X13 in an ELPP LIM unit Vol. 1, 5-36
System and power cards in an ELPP LIM unit Vol. 1, 5-48

6 SuperNode SE enhanced network card replacement procedures Vol. 1, 6-1

Introduction Vol. 1, 6-1
Application Vol. 1, 6-1
Common procedures Vol. 1, 6-1
Action Vol. 1, 6-2

Recording card replacement activities Vol. 1, 6-2
SuperNode SE ENET shelf designs Vol. 1, 6-3
Crosspoint and interface cards in a SuperNode SE 16k ENET Vol. 1, 6-7
Crosspoint and interface cards in a SuperNode SE 32k ENET Vol. 1, 6-31
Power converter cards in a SuperNode SE 16k ENET Vol. 1, 6-53
System cards in a SuperNode SE 16k ENET Vol. 1, 6-77
System cards in a SuperNode SE 32k ENET Vol. 1, 6-100

7 File processor card replacement procedures Vol. 1, 7-1

Introduction Vol. 1, 7-1
Application Vol. 1, 7-1
Common procedures Vol. 1, 7-1
Action Vol. 1, 7-1
Recording card replacement activities Vol. 1, 7-2
SuperNode Multicomputing Base shelf layouts Vol. 1, 7-3
NT9X89 in a storage device shelf in a file processor Vol. 1, 7-6
NT9X90 in a storage device shelf in a file processor Vol. 1, 7-18
NT9X91 in a storage device shelf in a file processor Vol. 1, 7-33
System cards in a file processor Vol. 1, 7-43

8 Frame supervisory panel and modular supervisory panel card replacement procedures Vol. 1, 8-1

Introduction Vol. 1, 8-1
Application Vol. 1, 8-1
Common procedures Vol. 1, 8-1
Action Vol. 1, 8-1
Recording card replacement activities Vol. 1, 8-2
FSP cards in a 42-in. (106.7-cm) SuperNode cabinet Vol. 1, 8-3
NT0X36 in a cabinetized input/output equipment frame Vol. 1, 8-8
NT0X36 in a cabinetized trunk module equipment frame Vol. 1, 8-29
NT0X36 in an input/output equipment frame Vol. 1, 8-53
NT0X36 in an international cabinet auxiliary module Vol. 1, 8-74
NT0X91 in a CPCE frame Vol. 1, 8-98
NT0X91 in a digital carrier equipment frame Vol. 1, 8-112
NT0X91 in a line module equipment frame Vol. 1, 8-123
NT0X91 in an MS6E Vol. 1, 8-133
NT0X91 in an MS7E, ST7E, or ST6E Vol. 1, 8-147
NT0X91 in a network equipment frame Vol. 1, 8-159
NT0X91 in a trunk module equipment frame Vol. 1, 8-172
NT6X36 in LCE-type frames and CLCE Vol. 1, 8-192
NTRX41 in MSP in streamline B cabinets Vol. 1, 8-197

9 Input/output device card replacement procedures Vol. 1, 9-1

Introduction Vol. 1, 9-1
Application Vol. 1, 9-1
Common procedures Vol. 1, 9-1
Action Vol. 1, 9-1

Recording card replacement activities Vol. 1, 9-2
IOD shelf layouts Vol. 1, 9-3
Disk drive and magnetic tape controller cards in an IOC Vol. 1, 9-10
NT1X67 in an IOC Vol. 1, 9-21
NT1X78 in an IOE DDU shelf Vol. 1, 9-28
NT1X89 in an IOC shelf Vol. 1, 9-37
NT2X70 in an IOC Vol. 1, 9-44
NTFX30 in an ISM Vol. 1, 9-61
NTFX31 in an ISM Vol. 1, 9-77
NTFX32AA in an ISM Vol. 1, 9-92
System cards in an IOC Vol. 1, 9-97

Card Replacement Procedures
Volume 2 of 7

1 Line concentrating module card replacement procedures Vol. 2, 1-1

Introduction Vol. 2, 1-1
- Application Vol. 2, 1-1
- Common procedures Vol. 2, 1-1
- Action Vol. 2, 1-1

Recording card replacement activities Vol. 2, 1-2
LCM shelf layouts Vol. 2, 1-3
Bus interface cards in an LCD Vol. 2, 1-13
Control complex cards in LCM-type PMs Vol. 2, 1-31
Line cards in an LCE line drawer Vol. 2, 1-39
NT6X30 in LCE-type frames Vol. 2, 1-47
NTBX71 in an LCME Vol. 2, 1-62
Power cards in an LCE line drawer Vol. 2, 1-73
Power cards in LCM-type PMs Vol. 2, 1-79

2 Line module card replacement procedures Vol. 2, 2-1

Introduction Vol. 2, 2-1
- Application Vol. 2, 2-1
- Common procedures Vol. 2, 2-1
- Action Vol. 2, 2-1

Recording card replacement activities Vol. 2, 2-2
LM shelf layouts Vol. 2, 2-3
Control complex cards in a line module controller Vol. 2, 2-9
Interface and power converter cards in an LM line drawer Vol. 2, 2-16
Line cards in an LM line drawer Vol. 2, 2-24
NT2X05 in a line module controller Vol. 2, 2-30
NT2X70 in a line module controller Vol. 2, 2-36

3 Link peripheral processor card replacement procedures Vol. 2, 3-1

Introduction Vol. 2, 3-1
Application Vol. 2, 3-1
Common procedures Vol. 2, 3-1
Action Vol. 2, 3-1
Recording card replacement activities Vol. 2, 3-2
LPP shelf layouts Vol. 2, 3-3
APU cards in an LPP LIS Vol. 2, 3-9
Common fill paddle boards in an LPP LIS Vol. 2, 3-36
EIU cards in an LPP LIS Vol. 2, 3-47
LIU7 cards in an LPP LIS Vol. 2, 3-57
FRIU cards in an LPP LIS Vol. 2, 3-68
NIU processor and controller cards in an LPP LIS Vol. 2, 3-82
NT9X13 in an LPP LIM unit Vol. 2, 3-89
NT9X30 in an LPP LIS Vol. 2, 3-100
NT9X74 in an LPP LIS Vol. 2, 3-126
NTDX16 in an LPP LIS Vol. 2, 3-140
NTEX28 in an NIU in an LPP LIS Vol. 2, 3-145
System and power cards in an LPP LIM unit Vol. 2, 3-155
VPU cards in an LPP LIS Vol. 2, 3-168
XLIU cards in an LPP LIS Vol. 2, 3-177

4 SuperNode SE LIS or ENI card replacement procedures Vol. 2, 4-1

Introduction Vol. 2, 4-1
Application Vol. 2, 4-1
Common procedures Vol. 2, 4-1
Action Vol. 2, 4-1
Recording card replacement activities Vol. 2, 4-2
SuperNode SE link interface shelf layouts Vol. 2, 4-3
Common fill cards in a SuperNode SE LIS or ENI shelf Vol. 2, 4-6
EIU cards in a SuperNode SE LIS Vol. 2, 4-13
FRIU cards in a SuperNode SE LIS Vol. 2, 4-24
LIU7 cards in a SuperNode SE LIS or ENI shelf Vol. 2, 4-38
NIU cards in a SuperNode SE LIS Vol. 2, 4-49
NT9X30 in a SuperNode SE LIS Vol. 2, 4-64
XLIU cards in a SuperNode SE LIS Vol. 2, 4-91

5 MTM card replacement procedures Vol. 2, 5-1

NT1X76 in an MTM Vol. 2, 5-2
NT3X67 in an MTM Vol. 2, 5-10

6 SuperNode message switch card replacement procedures Vol. 2, 6-1

Introduction Vol. 2, 6-1
Application Vol. 2, 6-1
Common procedures Vol. 2, 6-1
Action Vol. 2, 6-2

Recording card replacement activities Vol. 2, 6-2
SuperNode MS shelf layouts Vol. 2, 6-3
Interface cards in a SuperNode MS Vol. 2, 6-5
Manually busying LIM-to-MS SR128 links Vol. 2, 6-26
Returning LIM-to-MS SR128 links to service Vol. 2, 6-33
System cards in a SuperNode MS Vol. 2, 6-39

7 SuperNode SE message switch card replacement procedures Vol. 2, 7-1

Introduction Vol. 2, 7-1
Application Vol. 2, 7-1
Common procedures Vol. 2, 7-1
Action Vol. 2, 7-2
Recording card replacement activities Vol. 2, 7-2
SuperNode SE message switch shelf layouts Vol. 2, 7-3
Interface paddle boards in a SuperNode SE MS Vol. 2, 7-5
System cards in a SuperNode SE MS Vol. 2, 7-25

8 Message switch and buffer card replacement procedures Vol. 2, 8-1

Introduction Vol. 2, 8-1
Application Vol. 2, 8-1
Common procedures Vol. 2, 8-1
Action Vol. 2, 8-1
Recording card replacement activities Vol. 2, 8-2
MSB shelf layouts Vol. 2, 8-3
Control complex cards in an MSB Vol. 2, 8-12
NT2X70 in an MSB Vol. 2, 8-20
NT2X70 in an ST7G or STCM Vol. 2, 8-35
NT6X40 in an MSB Vol. 2, 8-48
NT6X68 in an MSB Vol. 2, 8-55
Processor and memory cards in an MSB Vol. 2, 8-62
Signaling terminal cards in an MSB Vol. 2, 8-70

9 SuperNode network card replacement procedures Vol. 2, 9-1

Introduction Vol. 2, 9-1
Application Vol. 2, 9-1
Common procedures Vol. 2, 9-1
Action Vol. 2, 9-2
Recording card replacement activities Vol. 2, 9-2
Network shelf layouts Vol. 2, 9-3
Crosspoint and interface cards in a 64k or 128k ENET Vol. 2, 9-15
Power converter cards in JNET shelves Vol. 2, 9-40
System cards in a 64k or 128k ENET Vol. 2, 9-49
System, interface, and crosspoint cards in JNET shelves Vol. 2, 9-72

10 Office alarm unit card replacement procedures Vol. 2, 10-1
Introduction Vol. 2, 10-1
Application Vol. 2, 10-1
Common procedures Vol. 2, 10-1
Action Vol. 2, 10-1
Recording card replacement activities Vol. 2, 10-2
OAU shelf layouts Vol. 2, 10-3
Control and circuit cards in the office alarm unit Vol. 2, 10-7
Power converter cards in the office alarm unit Vol. 2, 10-14

11 Remote line module card replacement procedures Vol. 2, 11-1
Introduction Vol. 2, 11-1
Application Vol. 2, 11-1
Common procedures Vol. 2, 11-1
Action Vol. 2, 11-1
Recording card replacement activities Vol. 2, 11-2
RLM shelf layouts Vol. 2, 11-3
Control complex cards in a remote line controller Vol. 2, 11-9
Line cards in an RLM line drawer Vol. 2, 11-16
NT2X05 in a remote line controller Vol. 2, 11-22
NT2X70 in a remote line controller Vol. 2, 11-28

Card Replacement Procedures Volume 3 of 7

1 Remote oscillator shelf card replacement procedures Vol. 3, 1-1
Introduction Vol. 3, 1-1
Application Vol. 3, 1-1
Common procedures Vol. 3, 1-1
Action Vol. 3, 1-1
Recording card replacement activities Vol. 3, 1-2
Remote oscillator shelf layouts Vol. 3, 1-3
NT1X78 in a remote oscillator shelf Vol. 3, 1-5
NT3X16 in a remote oscillator shelf Vol. 3, 1-14

2 Single shelf link peripheral processor card replacement procedures Vol. 3, 2-1
Introduction Vol. 3, 2-1
Application Vol. 3, 2-1
Common procedures Vol. 3, 2-1
Action Vol. 3, 2-1
Recording card replacement activities Vol. 3, 2-2
SSLPP shelf layouts Vol. 3, 2-3
Common fill cards in an SSLPP Vol. 3, 2-7

EIU cards in an SSLPP Vol. 3, 2-17
FRIU cards in an SSLPP Vol. 3, 2-29
LIU7 cards in an SSLPP Vol. 3, 2-44
NIU cards in an SSLPP Vol. 3, 2-57
Power converter cards in an SSLPP Vol. 3, 2-74
XLIU cards in an SSLPP Vol. 3, 2-105

3 SuperNode system load module card replacement procedures Vol. 3, 3-1

Introduction Vol. 3, 3-1
Application Vol. 3, 3-1
Common procedures Vol. 3, 3-1
Action Vol. 3, 3-2
Recording card replacement activities Vol. 3, 3-2
SuperNode SLM shelf layouts Vol. 3, 3-3
NT9X44 in a SuperNode SLM Vol. 3, 3-5
SPM NTLX60AA FIL with DSP RM DMS-Spectrum Peripheral Module Vol. 3, 3-26
SPM NTLX61AA SIM card DMS-Spectrum Peripheral Module Vol. 3, 3-37
SPM NTLX63AA CEM card DMS-Spectrum Peripheral Module Vol. 3, 3-45
SPM NTLX65BA DSP RM DMS-Spectrum Peripheral Module Vol. 3, 3-64
SPM NTLX71AA OC3 card DMS-Spectrum Peripheral Module Vol. 3, 3-78
SPM NTLX82AA CEM card DMS-Spectrum Peripheral Module Vol. 3, 3-99
SPM NTLX82BA CEM card DMS-Spectrum Peripheral Module Vol. 3, 3-118
System cards in a SuperNode SLM Vol. 3, 3-137

4 TOPS message switch card replacement procedures Vol. 3, 4-1

TMS shelf layouts Vol. 3, 4-2
NT2X70 in a TMS Vol. 3, 4-8
NT6X series in a TMS Vol. 3, 4-17
NT6X69 in a TMS Vol. 3, 4-19
NTBX01 in a TMS Vol. 3, 4-30
NTBX02 in a TMS Vol. 3, 4-37
NTMX77 in a TMS Vol. 3, 4-48

5 TOPS MP card replacement procedures Vol. 3, 5-1

NT2X70 in a TPC Vol. 3, 5-2
NTNX62 in a TPC Vol. 3, 5-7
NTNX63 in a TPC Vol. 3, 5-12
NTNX64 in a TPC Vol. 3, 5-17
NTNX65 in a TPC Vol. 3, 5-22
NTNX66 in a TPC Vol. 3, 5-27
NTNX68 in a TPC Vol. 3, 5-33
NTOM36 Keyboard Vol. 3, 5-40
NTOM90 in an MP Vol. 3, 5-45

NTOM92 in an MP Vol. 3, 5-52
Placing an MP position in service (integrated) Vol. 3, 5-57
Removing an MP position from service (integrated) Vol. 3, 5-62

6 Trunk module card replacement procedures Vol. 3, 6-1

Introduction Vol. 3, 6-1
Application Vol. 3, 6-1
Common procedures Vol. 3, 6-1
Action Vol. 3, 6-1
Recording card replacement activities Vol. 3, 6-2
TM shelf layouts Vol. 3, 6-3
Control complex cards in trunk and service modules Vol. 3, 6-27
Enhanced digital test unit or digital test unit cards in trunk and service modules Vol. 3, 6-37
Metallic test unit cards in trunk and service modules Vol. 3, 6-44
NT3X08AA in an MTM Vol. 3, 6-64
Power converter cards in trunk and service modules Vol. 3, 6-69
Single-card PMs in trunk and service modules Vol. 3, 6-84
Trunk, maintenance, and service cards in trunk and service modules Vol. 3, 6-93

7 Universal Edge 9000 card replacement procedures Vol. 3, 7-1

Introduction Vol. 3, 7-1
Application Vol. 3, 7-1
Common procedures Vol. 3, 7-1
Action Vol. 3, 7-1
Recording card replacement activities Vol. 3, 7-2
UEN shelf layout Vol. 3, 7-3
Control cards in a UEN shelf Vol. 3, 7-5
Line cards in a UEN shelf Vol. 3, 7-14
NTNP20 in a UEN shelf Vol. 3, 7-19

8 XPM card replacement procedures Vol. 3, 8-1

Introduction Vol. 3, 8-1
Application Vol. 3, 8-1
Common procedures Vol. 3, 8-1
Action Vol. 3, 8-1
Recording card replacement activities Vol. 3, 8-2
XPM shelf layouts Vol. 3, 8-3
Back plane cards in an XPM Vol. 3, 8-19
Control complex cards in an XPM Vol. 3, 8-31
NT2X70 in an XPM Vol. 3, 8-42
NT6X40 in an XPM Vol. 3, 8-59
NT6X48 in LGC, PLGC, LTC, PLTC Vol. 3, 8-72
NT6X48 in MSB7 Vol. 3, 8-82
NT6X78 in an XPM Vol. 3, 8-90
NT7X03 in an XPM Vol. 3, 8-97
NT7X07AA in an LTCI Vol. 3, 8-106
NTBX02 in an XPM Vol. 3, 8-115

P-side interface cards in an XPM Vol. 3, 8-124
Processor and memory cards in an XPM Vol. 3, 8-147

9 Card replacement common procedures Vol. 3, 9-1

Introduction Vol. 3, 9-1
Application Vol. 3, 9-1
Action Vol. 3, 9-1
Activating CCS7 links Vol. 3, 9-2
Activity switch with memory match Vol. 3, 9-11
Card removal and replacement process Vol. 3, 9-19
Cleaning fiber-optic components and assemblies Vol. 3, 9-24
Correcting a load mismatch Vol. 3, 9-32
Deactivating CCS7 links Vol. 3, 9-47
Failure to switch clock mastership Vol. 3, 9-55
Loading a PM Vol. 3, 9-64
Manually busying LIM-to-MS DS30 links Vol. 3, 9-76
Manually busying Series II PM and CPM C-side links Vol. 3, 9-82
Manually busying SMA C-side links Vol. 3, 9-89
Manually busying SMA2 C-side links Vol. 3, 9-95
Memory extension in the SuperNode CM Vol. 3, 9-101
Memory extension in the SuperNode SE CM Vol. 3, 9-119
Moving an XSG to a spare XLIU Vol. 3, 9-137
Placing an MP position in service (standalone) Vol. 3, 9-145
Removing an MP position from service (standalone) Vol. 3, 9-150
Removing and replacing a card Vol. 3, 9-156
Replacing a card Vol. 3, 9-160
Replacing a card STAR or RLD Vol. 3, 9-166
Replacing a line card Vol. 3, 9-172
Reseating cards in equipment shelves Vol. 3, 9-179
Returning a card for repair or replacement Vol. 3, 9-184
Returning LIM-to-MS DS30 links to service Vol. 3, 9-188
Switching the clock source Vol. 3, 9-193
Unseating cards in equipment shelves Vol. 3, 9-200
Verifying load compatibility of SuperNode cards Vol. 3, 9-204

Card Replacement Procedures
Volume 4 of 7

1 XPM card replacement procedures Vol. 4, 1-1

NT0X10 in an IOPAC RMM Vol. 4, 1-2
NT0X10 in an OPM RMM Vol. 4, 1-6
NT0X10 in an RLCM-EDC RMM Vol. 4, 1-10
NT0X10 in an RLCM RMM Vol. 4, 1-14
NT0X10 in an RSC RMM Vol. 4, 1-18
NT0X10 in an RSC-S (DS-1) Model A RMM Vol. 4, 1-25
NT0X10 in an RSC-S (DS-1) Model B RMM Vol. 4, 1-31
NT0X10 in an RSC-S (PCM-30) Model A RMM Vol. 4, 1-37
NT0X10 in an RSC-S (PCM-30) Model B RMM Vol. 4, 1-43

NT0X91 in an IOPAC FSP Vol. 4, 1-49
NT0X91 in an RLCM Vol. 4, 1-61
NT0X91 in an RSC Vol. 4, 1-74
NT0X91AA in an OPM Vol. 4, 1-90
NT0X91AE in an OPM Vol. 4, 1-96
NT0X91AE in an RLCE Vol. 4, 1-105
NT2X06 in an IOPAC RMM Vol. 4, 1-114
NT2X06 in an OPM RMM Vol. 4, 1-121
NT2X06 in an RLCM RMM Vol. 4, 1-129
NT2X06 in an RSC RMM Vol. 4, 1-136
NT2X06 in an RSC-S (DS-1) Model A RMM Vol. 4, 1-144
NT2X06 in an RSC-S (DS-1) Model B RMM Vol. 4, 1-153
NT2X06 in an RSC-S (PCM-30) Model A RMM Vol. 4, 1-162
NT2X09 in an IOPAC RMM Vol. 4, 1-171
NT2X09 in an OPM RMM Vol. 4, 1-178
NT2X09 in an RLCM RMM Vol. 4, 1-186
NT2X09 in an RSC RMM Vol. 4, 1-194
NT2X09 in an RSC-S (DS-1) Model A RMM Vol. 4, 1-202
NT2X09 in an RSC-S (DS-1) Model B RMM Vol. 4, 1-211
NT2X09 in an RSC-S (PCM-30) Model A RMM Vol. 4, 1-220
NT2X10 in an OPM RMM Vol. 4, 1-229
NT2X10 in an RLCM RMM Vol. 4, 1-233
NT2X10 in an RSC RMM Vol. 4, 1-237
NT2X10 in an RSC-S (DS-1) Model A RMM Vol. 4, 1-244
NT2X10 in an RSC-S (DS-1) Model B RMM Vol. 4, 1-251
NT2X10 in an RSC-S (PCM-30) Model A RMM Vol. 4, 1-258
NT2X11 in an OPAC RMM Vol. 4, 1-265
NT2X11 in an OPM RMM Vol. 4, 1-270
NT2X11 in an RLCM-EDC RMM Vol. 4, 1-274
NT2X11 in an RLCM RMM Vol. 4, 1-278
NT2X11 in an RSC RMM Vol. 4, 1-282
NT2X11 in an RSC-S (DS-1) Model A RMM Vol. 4, 1-289
NT2X11 in an RSC-S (DS-1) Model B RMM Vol. 4, 1-298
NT2X11 in an RSC-S (PCM-30) Model A RMM Vol. 4, 1-307
NT2X48 in an IOPAC RMM Vol. 4, 1-316
NT2X48 in an OPM RMM Vol. 4, 1-321
NT2X48 in an RLCM RMM Vol. 4, 1-326
NT2X55 in an RSC RMM Vol. 4, 1-331
NT2X57 in an IOPAC RMM Vol. 4, 1-338
NT2X57 in an OPM RMM Vol. 4, 1-342
NT2X57 in an RLCM-EDC RMM Vol. 4, 1-346
NT2X57 in an RLCM RMM Vol. 4, 1-350
NT2X57 in an RSC RMM Vol. 4, 1-355
NT2X57 in an RSC-S (DS-1) Model A RMM Vol. 4, 1-362
NT2X57 in an RSC-S (DS-1) Model B RMM Vol. 4, 1-369
NT2X57 in an RSC-S (PCM-30) Model A RMM Vol. 4, 1-376
NT2X59 in an IOPAC RMM Vol. 4, 1-383
NT2X59 in an OPM RMM Vol. 4, 1-387
NT2X59 in an RLCM-EDC RMM Vol. 4, 1-394
NT2X59 in an RLCM RMM Vol. 4, 1-401
NT2X59 in an RSC RMM Vol. 4, 1-406

NT2X59 in an RSC-S (DS-1) Model A RMM Vol. 4, 1-413
NT2X59 in an RSC-S (DS-1) Model B RMM Vol. 4, 1-420
NT2X59 in an RSC-S (PCM-30) Model A RMM Vol. 4, 1-427
NT2X70 in an IOPAC HIE Vol. 4, 1-434
NT2X70 in an OPM HIE Vol. 4, 1-441
NT2X70 in an RLCM-EDC HIE Vol. 4, 1-455
NT2X70 in an RLCM HIE Vol. 4, 1-464
NT2X70 in an RSC Vol. 4, 1-478
NT2X70 in an SMA Vol. 4, 1-490
NT2X70 in an SMA-MVI-20 Vol. 4, 1-498
NT2X70 in an SMS Vol. 4, 1-506
NT2X70 in an SMS-R Vol. 4, 1-517
NT2X70 in an SMU Vol. 4, 1-526
NT2X90 in an IOPAC RMM Vol. 4, 1-533
NT2X90 in an OPAC RMM Vol. 4, 1-538
NT2X90 in an OPM RMM Vol. 4, 1-543
NT2X90 in an RLCM-EDC RMM Vol. 4, 1-551
NT2X90 in an RLCM RMM Vol. 4, 1-557
NT2X90 in an RSC RMM Vol. 4, 1-562
NT2X90 in an RSC-S (DS-1) Model A RMM Vol. 4, 1-569
NT2X90 in an RSC-S (DS-1) Model B RMM Vol. 4, 1-576
NT3X04 in an RSC RMM Vol. 4, 1-583
NT3X09 in an IOPAC RMM Vol. 4, 1-590
NT3X09 in an OPAC RMM Vol. 4, 1-596
NT3X09 in an OPM RMM Vol. 4, 1-601
NT3X09 in an RLCM-EDC RMM Vol. 4, 1-607
NT3X09 in an RLCM RMM Vol. 4, 1-612
NT3X09 in an RSC RMM Vol. 4, 1-617
NT3X09 in an RSC-S (DS-1) Model A RMM Vol. 4, 1-624
NT3X09 in an RSC-S (DS-1) Model B RMM Vol. 4, 1-634
NT3X09 in an RSC-S (PCM-30) Model B RMM Vol. 4, 1-644
NT3X82 in an RSC RMM Vol. 4, 1-653
NT3X83 in an RSC RMM Vol. 4, 1-660
NT4X97 in an IOPAC RMM Vol. 4, 1-668
NT4X97 in an RSC-S (PCM-30) Model A RMM Vol. 4, 1-673
NT4X97 in an RSC-S (PCM-30) Model B RMM Vol. 4, 1-680
NT4X98 in an IOPAC RMM Vol. 4, 1-687
NT4X98 in an RSC-S (PCM-30) Model B RMM Vol. 4, 1-694
NT6X17 in an IOPAC ILCM Vol. 4, 1-703
NT6X17 in an OPM Vol. 4, 1-707
NT6X17 in an RLCM Vol. 4, 1-711
NT6X17 in an RSC LCM Vol. 4, 1-715
NT6X17 in an RSC-S (DS-1) Model A LCME Vol. 4, 1-723
NT6X17 in an RSC-S (DS-1) Model B LCME Vol. 4, 1-731
NT6X17 in a STAR or RLD Vol. 4, 1-739
NT6X18 in an IOPAC ILCM Vol. 4, 1-743
NT6X18 in an OPAC LCM Vol. 4, 1-747
NT6X18 in an OPM Vol. 4, 1-751
NT6X18 in an RLCM Vol. 4, 1-755
NT6X18 in an RSC LCM Vol. 4, 1-759
NT6X18 in an RSC-S (DS-1) Model A LCME Vol. 4, 1-767

NT6X18 in an RSC-S (DS-1) Model B LCME Vol. 4, 1-775
NT6X18 in a STAR or RLD Vol. 4, 1-783
NT6X19 in an IOPAC ILCM Vol. 4, 1-787
NT6X19 in an OPM Vol. 4, 1-791
NT6X19 in an RLCM Vol. 4, 1-795
NT6X19 in an RSC LCM Vol. 4, 1-799
NT6X19 in an RSC-S (DS-1) Model A LCME Vol. 4, 1-807
NT6X19 in an RSC-S (DS-1) Model B LCME Vol. 4, 1-815
NT6X19 in a STAR or RLD Vol. 4, 1-823
NT6X20 in an IOPAC ILCM Vol. 4, 1-827
NT6X20 in an OPM Vol. 4, 1-831
NT6X20 in an RLCM Vol. 4, 1-835
NT6X20 in an RSC LCM Vol. 4, 1-839
NT6X20 in an RSC-S (DS-1) Model A LCME Vol. 4, 1-847
NT6X20 in an RSC-S (DS-1) Model B LCME Vol. 4, 1-855
NT6X20 in a STAR or RLD Vol. 4, 1-863
NT6X21 in an IOPAC ILCM Vol. 4, 1-867
NT6X21 in an OPM Vol. 4, 1-871
NT6X21 in an RLCM Vol. 4, 1-875
NT6X21 in an RLCM-EDC LCM Vol. 4, 1-879
NT6X21 in an RSC-S (DS-1) Model A LCME Vol. 4, 1-883
NT6X21 in an RSC-S (DS-1) Model B LCME Vol. 4, 1-893
NT6X21 in an RSC-S (PCM-30) Model A LCME Vol. 4, 1-902
NT6X21 in an RSC-S (PCM-30) Model B LCME Vol. 4, 1-911
NT6X21 in a STAR or RLD Vol. 4, 1-920
NT6X27 in an IOPAC HIE Vol. 4, 1-924
NT6X27 in an OPM HIE Vol. 4, 1-931
NT6X27 in an RLCM HIE Vol. 4, 1-938
NT6X30 in an RSC LCM Vol. 4, 1-945
NT6X30 in an RSC-S (DS-1) Model A LCME Vol. 4, 1-960
NT6X30 in an RSC-S (DS-1) Model B LCME Vol. 4, 1-974
NT6X30 in an RSC-S (PCM-30) Model A LCME Vol. 4, 1-988
NT6X30 in an RSC-S (PCM-30) Model B LCME Vol. 4, 1-1002
NT6X36 in an IOPAC FSP Vol. 4, 1-1016
NT6X36 in an OPM Vol. 4, 1-1021
NT6X36 in an RLCM-EDC FSP Vol. 4, 1-1026
NT6X36 in an RLCM FSP Vol. 4, 1-1031
NT6X36 in an RSC-S FSP for CRSC or CEXT Vol. 4, 1-1036

Card Replacement Procedures
Volume 5 of 7

1 XPM card replacement procedures (continued) Vol. 5, 1-1

NT6X40 in an SMA Vol. 5, 1-2
NT6X40 in an SMA-MVI-20 Vol. 5, 1-14
NT6X40 in an SMA2 Vol. 5, 1-26
NT6X40 in an SMS Vol. 5, 1-38
NT6X40 in an SMU Vol. 5, 1-51

NT6X41 in an SMA Vol. 5, 1-64
NT6X41 in an SMA-MVI-20 Vol. 5, 1-71
NT6X41 in an SMS Vol. 5, 1-78
NT6X41 in an SMS-R Vol. 5, 1-87
NT6X41 in an SMU Vol. 5, 1-95
NT6X42 in an SMA Vol. 5, 1-101
NT6X42 in an SMA-MVI-20 Vol. 5, 1-107
NT6X42 in an SMS Vol. 5, 1-114
NT6X42 in an SMS-R Vol. 5, 1-122
NT6X44 in an RSC Vol. 5, 1-130
NT6X44 in an SMA Vol. 5, 1-138
NT6X44 in an SMA-MVI-20 Vol. 5, 1-144
NT6X44 in an SMS Vol. 5, 1-150
NT6X44 in an SMS-R Vol. 5, 1-158
NT6X45 in an IOPAC HIE Vol. 5, 1-166
NT6X45 in an OPAC HIE Vol. 5, 1-172
NT6X45 in an OPM HIE Vol. 5, 1-178
NT6X45 in an RLCM HIE Vol. 5, 1-184
NT6X47 in an IOPAC HIE Vol. 5, 1-190
NT6X47 in an OPM HIE Vol. 5, 1-196
NT6X47 in an RLCM HIE Vol. 5, 1-202
NT6X48 in an RSC Vol. 5, 1-208
NT6X50 in an OPAC HIE Vol. 5, 1-216
NT6X50 in an OPM HIE Vol. 5, 1-223
NT6X50 in an RLCM-EDC HIE Vol. 5, 1-230
NT6X50 in an RLCM HIE Vol. 5, 1-237
NT6X50 in an RSC Vol. 5, 1-244
NT6X50 in an SMA Vol. 5, 1-259
NT6X50 in an SMA-MVI-20 Vol. 5, 1-275
NT6X51 in an IOPAC ILCM Vol. 5, 1-291
NT6X51 in an OPAC LCM Vol. 5, 1-298
NT6X51 in an OPM Vol. 5, 1-305
NT6X51 in an RLCM Vol. 5, 1-312
NT6X51 in an RLCM-EDC Vol. 5, 1-319
NT6X51 in an RSC-S (DS-1) Model A LCM Vol. 5, 1-324
NT6X51 in an RSC-S (DS-1) Model B LCME Vol. 5, 1-332
NT6X51 in an RSC-S (PCM-30) Model A LCM Vol. 5, 1-339
NT6X51 in an RSC-S (PCM-30) Model B LCM Vol. 5, 1-347
NT6X52 in an IOPAC ILCM Vol. 5, 1-355
NT6X52 in an OPAC LCM Vol. 5, 1-361
NT6X52 in an OPM Vol. 5, 1-367
NT6X52 in an RLCM Vol. 5, 1-373
NT6X52 in an RLCM-EDC Vol. 5, 1-379
NT6X52 in an RSC LCM Vol. 5, 1-384
NT6X52 in an RSC-S (DS-1) Model A LCME Vol. 5, 1-392
NT6X52 in an RSC-S (DS-1) Model B LCME Vol. 5, 1-401
NT6X52 in an RSC-S (PCM-30) Model A LCME Vol. 5, 1-410
NT6X53 in an IOPAC ILCM Vol. 5, 1-418
NT6X53 in an OPAC LCM Vol. 5, 1-425
NT6X53 in an OPM Vol. 5, 1-432
NT6X53 in an RLCM Vol. 5, 1-444

NT6X53 in an RLCM-EDC Vol. 5, 1-453
NT6X53 in an RSC LCM Vol. 5, 1-460
NT6X53 in an RSC-S (DS-1) Model A LCM(E) Vol. 5, 1-469
NT6X53 in an RSC-S (DS-1) Model B LCM(E) Vol. 5, 1-478
NT6X53 in a STAR Vol. 5, 1-487
NT6X54 in an IOPAC ILCM Vol. 5, 1-493
NT6X54 in an OPAC LCM Vol. 5, 1-500
NT6X54 in an OPM Vol. 5, 1-509
NT6X54 in an RLCM Vol. 5, 1-518
NT6X54 in an RLCM-EDC Vol. 5, 1-527
NT6X54 in an RSC Vol. 5, 1-533
NT6X54 in an RSC-S (DS-1) Model A LCM(E) Vol. 5, 1-542
NT6X54 in an RSC-S (DS-1) Model B LCM(E) Vol. 5, 1-549
NT6X54 in a STAR Vol. 5, 1-556
NT6X60 in an IOPAC HIE Vol. 5, 1-565
NT6X60 in an OPAC HIE Vol. 5, 1-572
NT6X60 in an OPM HIE Vol. 5, 1-579
NT6X60 in an RLCM HIE Vol. 5, 1-587
NT6X69 in an RSC-M Vol. 5, 1-595
NT6X69 in an RSC RCC/RCC2 Vol. 5, 1-605
NT6X69 in an RSC-S (DS-1) Model A RCC2 Vol. 5, 1-613
NT6X69 in an RSC-S (DS-1) Model B RCC2 Vol. 5, 1-622
NT6X69 in an RSC-S (PCM-30) Model A RCO2 Vol. 5, 1-630
NT6X69 in an RSC-S (PCM-30) Model B RCO2 Vol. 5, 1-639
NT6X69 in an SMA Vol. 5, 1-648
NT6X69 in an SMA-MVI-20 Vol. 5, 1-654
NT6X69 in an SMS Vol. 5, 1-661
NT6X69 in an SMS-R Vol. 5, 1-670
NT6X69 in an SMU Vol. 5, 1-678
NT6X71 in an IOPAC ILCM Vol. 5, 1-684
NT6X71 in an OPM Vol. 5, 1-688
NT6X71 in an RLCM Vol. 5, 1-692
NT6X71 in an RSC LCM Vol. 5, 1-696
NT6X71 in an RSC-S (DS-1) Model A LCME Vol. 5, 1-705
NT6X71 in an RSC-S (DS-1) Model B LCME Vol. 5, 1-713
NT6X71 in a STAR or RLD Vol. 5, 1-721
NT6X72 in an RSC Vol. 5, 1-725
NT6X73 in an IOPAC HIE Vol. 5, 1-734
NT6X73 in an OPAC HIE Vol. 5, 1-738
NT6X73 in an OPM HIE Vol. 5, 1-742
NT6X73 in an RLCM-EDC HIE Vol. 5, 1-746
NT6X73 in an RLCM HIE Vol. 5, 1-751
NT6X74 in an IOPAC RMM Vol. 5, 1-755
NT6X74 in an OPM RMM Vol. 5, 1-761
NT6X74 in an RLCM-EDC RMM Vol. 5, 1-768
NT6X74 in an RLCM RMM Vol. 5, 1-775
NT6X74 in an RSC RMM Vol. 5, 1-782
NT6X74 in an RSC-S (DS-1) Model A RMM Vol. 5, 1-790
NT6X74 in an RSC-S (DS-1) Model B RMM Vol. 5, 1-799
NT6X74 in an RSC-S (PCM-30) Model A RMM Vol. 5, 1-808
NT6X75 in an IOPAC HIE Vol. 5, 1-817

NT6X75 in an OPAC HIE Vol. 5, 1-824
NT6X75 in an OPM HIE Vol. 5, 1-831
NT6X75 in an RLCM HIE Vol. 5, 1-838
NT6X76 in an RSC LCME Vol. 5, 1-845
NT6X76 in an RSC-S (DS-1) Model A LCME Vol. 5, 1-853
NT6X76 in an RSC-S (DS-1) Model B LCME Vol. 5, 1-861
NT6X76 in a STAR or RLD Vol. 5, 1-869
NT6X78 in an RSC-M Vol. 5, 1-876
NT6X78 in an RSC RCC/RCC2 Vol. 5, 1-883
NT6X78 in an RSC-S (DS-1) Model A RCC2 Vol. 5, 1-891
NT6X78 in an RSC-S (DS-1) Model B RCC2 Vol. 5, 1-898
NT6X78 in an RSC-S (PCM-30) Model A RCO2 Vol. 5, 1-905
NT6X78 in an RSC-S (PCM-30) Model B RCO2 Vol. 5, 1-912
NT6X78 in an SMA Vol. 5, 1-919
NT6X78 in an SMA-MVI-20 Vol. 5, 1-925
NT6X78 in an SMA2 Vol. 5, 1-932
NT6X78 in an SMS Vol. 5, 1-939
NT6X78 in an SMU Vol. 5, 1-946
NT6X80 in an SMA Vol. 5, 1-951
NT6X80 in an SMA-MVI-20 Vol. 5, 1-957
NT6X80 in an SMS Vol. 5, 1-964
NT6X80 in an SMS-R Vol. 5, 1-972
NT6X80 in an SMU Vol. 5, 1-981

Card Replacement Procedures
Volume 6 of 7

1 XPM card replacement procedures (continued) Vol. 6, 1-1

NT6X85 in an SMS Vol. 6, 1-2
NT6X85 in an SMS-R Vol. 6, 1-13
NT6X85 in an SMU Vol. 6, 1-24
NT6X86 in an SMS Vol. 6, 1-30
NT6X86 in an SMS-R Vol. 6, 1-39
NT6X87 in an RSC LCME Vol. 6, 1-48
NT6X87 in an RSC-S (DS-1) Model B LCME Vol. 6, 1-56
NT6X92 in an RSC-M Vol. 6, 1-64
NT6X92 in an RSC RCC/RCC2 Vol. 6, 1-71
NT6X92 in an RSC-S (DS-1) Model A RCC2 Vol. 6, 1-79
NT6X92 in an RSC-S (DS-1) Model B RCC2 Vol. 6, 1-87
NT6X92 in an RSC-S (PCM-30) Model A RCO2 Vol. 6, 1-95
NT6X92 in an RSC-S (PCM-30) Model B RCO2 Vol. 6, 1-104
NT6X92 in an SMA Vol. 6, 1-112
NT6X92 in an SMA-MVI-20 Vol. 6, 1-118
NT6X92 in an SMA2 Vol. 6, 1-125
NT6X92 in an SMS Vol. 6, 1-132
NT6X92 in an SMU Vol. 6, 1-140
NT6X99 in an IOPAC ILCM Vol. 6, 1-146
NT6X99 in an OPAC LCM Vol. 6, 1-150

NT6X99 in an OPM Vol. 6, 1-154
NT6X99 in an RLCM Vol. 6, 1-158
NT6X99 in an RSC LCM Vol. 6, 1-162
NT6X99 in an RSC-S (DS-1) Model A LCME Vol. 6, 1-170
NT6X99 in an RSC-S (DS-1) Model B LCME Vol. 6, 1-178
NT6X99 in a STAR or RLD Vol. 6, 1-186
NT7X05 in an RSC RCC/RCC2 Vol. 6, 1-190
NT7X05 in an RSC-S (DS-1) Model A RCC2 Vol. 6, 1-198
NT7X05 in an RSC-S (DS-1) Model B RCC2 Vol. 6, 1-207
NT7X05 in an RSC-S (PCM-30) Model A RCO2 Vol. 6, 1-216
NT7X05 in an RSC-S (PCM-30) Model B RCO2 Vol. 6, 1-225
NT7X05 in an SMS Vol. 6, 1-234
NT7X05 in an SMS-R Vol. 6, 1-243
NT7X05 in an SMU Vol. 6, 1-252
NT8X02 in an OPAC BCU Vol. 6, 1-261
NT8X02 in an OPM BCU Vol. 6, 1-265
NT8X18 in an SMS-R Vol. 6, 1-270
NTAX74 in an RSC-S (DS-1) Model A RCC2 Vol. 6, 1-281
NTAX74 in an RSC-S (DS-1) Model B RCC2 Vol. 6, 1-292
NTAX74 in an RSC-S (PCM-30) Model A RCO2 Vol. 6, 1-303
NTAX74 in an RSC-S (PCM-30) Model B RCO2 Vol. 6, 1-315
NTAX74 in an SMA Vol. 6, 1-327
NTAX74 in an SMA-MVI-20 Vol. 6, 1-337
NTAX74 in an SMA2 Vol. 6, 1-347
NTAX78 in an SMA Vol. 6, 1-355
NTAX78 in an SMA-MVI-20 Vol. 6, 1-362
NTAX78 in an SMU Vol. 6, 1-369
NTBX01 in an RSC RCC2 Vol. 6, 1-374
NTBX01 in an RSC-S (DS-1) Model A RCC2 Vol. 6, 1-381
NTBX01 in an RSC-S (DS-1) Model B RCC2 Vol. 6, 1-390
NTBX01 in an RSC-S (PCM-30) Model A RCO2 Vol. 6, 1-399
NTBX01 in an RSC-S (PCM-30) Model B RCO2 Vol. 6, 1-408
NTBX01 in an SMA Vol. 6, 1-417
NTBX01 in an SMA-MVI-20 Vol. 6, 1-423
NTBX01 in an SMA2 Vol. 6, 1-430
NTBX01 in an SMU Vol. 6, 1-437
NTBX02 in an RSC RCC2 Vol. 6, 1-443
NTBX02 in an RSC-S (DS-1) Model A RCC2 Vol. 6, 1-456
NTBX02 in an RSC-S (DS-1) Model B RCC2 Vol. 6, 1-469
NTBX02 in an RSC-S (PCM-30) Model A RCO2 Vol. 6, 1-482
NTBX02 in an RSC-S (PCM-30) Model B RCO2 Vol. 6, 1-495
NTBX02 in an SMA Vol. 6, 1-508
NTBX02 in an SMA-MVI-20 Vol. 6, 1-515
NTBX02 in an SMA2 Vol. 6, 1-523
NTBX02 in an SMU Vol. 6, 1-529
NTBX26 in an RSC LCME Vol. 6, 1-538
NTBX26 in an RSC-S (DS-1) Model A LCME Vol. 6, 1-546
NTBX26 in an RSC-S (DS-1) Model B LCME Vol. 6, 1-554
NTBX27 in an RSC LCME Vol. 6, 1-562
NTBX27 in an RSC-S (DS-1) Model A LCME Vol. 6, 1-570
NTBX27 in an RSC-S (DS-1) Model B LCME Vol. 6, 1-578

NTBX27 in a STAR or RLD Vol. 6, 1-586
NTBX34 in an RSC LCME Vol. 6, 1-593
NTBX34 in an RSC-S (DS-1) Model A LCME Vol. 6, 1-601
NTBX34 in an RSC-S (DS-1) Model B LCME Vol. 6, 1-611
NTBX34 in an RSC-S (PCM-30) Model A LCME Vol. 6, 1-621
NTBX35 in an RSC LCME Vol. 6, 1-630
NTBX35 in an RSC-S (DS-1) Model A LCME Vol. 6, 1-638
NTBX35 in an RSC-S (DS-1) Model B LCME Vol. 6, 1-648
NTBX35 in an RSC-S (PCM-30) Model A LCME Vol. 6, 1-658
NTBX36 in an RSC LCME Vol. 6, 1-667
NTBX36 in an RSC-S (DS-1) Model A LCME Vol. 6, 1-677
NTBX36 in an RSC-S (DS-1) Model B LCME Vol. 6, 1-687
NTBX72 in an RSC LCME Vol. 6, 1-697
NTBX72 in an RSC-S (DS-1) Model A LCME Vol. 6, 1-706
NTBX72 in an RSC-S (DS-1) Model B LCME Vol. 6, 1-715
NTBX72 in an RSC-S (PCM-30) Model A LCME Vol. 6, 1-724
NTEX17 in an RLCM Vol. 6, 1-733
NTEX17 in an RSC LCM Vol. 6, 1-743
NTEX17 in an RSC-S (DS-1) Model A LCME Vol. 6, 1-753
NTEX17 in an RSC-S (DS-1) Model B LCM Vol. 6, 1-763
NTEX17 in a STAR Vol. 6, 1-773
NTEX54 in an RLCM Vol. 6, 1-783
NTEX54 in an RSC LCM Vol. 6, 1-800
NTEX54 in an RSC-S (DS-1) Model A LCME Vol. 6, 1-817
NTEX54 in an RSC-S (DS-1) Model B LCM Vol. 6, 1-834
NTEX54 in a STAR Vol. 6, 1-851
NTMX45 in an IOPAC HIE Vol. 6, 1-868
NTMX45 in an OPAC HIE Vol. 6, 1-878
NTMX45 in an OPM HIE Vol. 6, 1-888
NTMX45 in an RLCM HIE Vol. 6, 1-898
NTMX71 in an RSC Vol. 6, 1-908
NTMX71 in an SMA Vol. 6, 1-916
NTMX71 in an SMA-MVI-20 Vol. 6, 1-924
NTMX71 in an SMS Vol. 6, 1-932
NTMX71 in an SMU Vol. 6, 1-940
NTMX72 in an RSC-M Vol. 6, 1-949
NTMX72 in an RSC RCC2 Vol. 6, 1-957
NTMX72 in an RSC-S (DS-1) Model A RCC2 Vol. 6, 1-966
NTMX72 in an RSC-S (DS-1) Model B RCC2 Vol. 6, 1-975
NTMX72 in an RSC-S (PCM-30) Model A RCO2 Vol. 6, 1-984
NTMX72 in an RSC-S (PCM-30) Model B RCO2 Vol. 6, 1-993
NTMX72 in an SMA2 Vol. 6, 1-1002

Card Replacement Procedures
Volume 7 of 7

1 XPM card replacement procedures (continued) Vol. 7, 1-1
NTMX73 in an RSC-M Vol. 7, 1-2

NTMX73 in an RSC RCC2 Vol. 7, 1-9
NTMX73 in an RSC-S (DS-1) Model A RCC2 Vol. 7, 1-17
NTMX73 in an RSC-S (DS-1) Model B RCC2 Vol. 7, 1-26
NTMX73 in an RSC-S (PCM-30) Model A RCO2 Vol. 7, 1-36
NTMX73 in an RSC-S (PCM-30) Model B RCO2 Vol. 7, 1-45
NTMX73 in an SMA2 Vol. 7, 1-54
NTMX74 in an RSC-M Vol. 7, 1-60
NTMX74 in an RSC RCC2 Vol. 7, 1-69
NTMX74 in an RSC-S (DS-1) Model A RCC2 Vol. 7, 1-77
NTMX74 in an RSC-S (DS-1) Model B RCC2 Vol. 7, 1-86
NTMX74 in an RSC-S (PCM-30) Model A RCO2 Vol. 7, 1-95
NTMX74 in an RSC-S (PCM-30) Model B RCO2 Vol. 7, 1-104
NTMX75 in an RSC-M Vol. 7, 1-113
NTMX75 in an RSC RCC2 Vol. 7, 1-120
NTMX75 in an RSC-S (DS-1) Model A RCC2 Vol. 7, 1-128
NTMX75 in an RSC-S (DS-1) Model B RCC2 Vol. 7, 1-136
NTMX75 in an RSC-S (PCM-30) Model A RCO2 Vol. 7, 1-144
NTMX75 in an RSC-S (PCM-30) Model B RCO2 Vol. 7, 1-153
NTMX75 in an SMA2 Vol. 7, 1-162
NTMX76 in an RSC-M Vol. 7, 1-168
NTMX76 in an RSC RCC2 Vol. 7, 1-175
NTMX76 in an RSC-S (DS-1) Model A RCC2 Vol. 7, 1-182
NTMX76 in an RSC-S (DS-1) Model B RCC2 Vol. 7, 1-188
NTMX76 in an RSC-S (PCM-30) Model A RCO2 Vol. 7, 1-195
NTMX76 in an RSC-S (PCM-30) Model B RCO2 Vol. 7, 1-205
NTMX76 in an SMA2 Vol. 7, 1-214
NTMX77 in an RSC Vol. 7, 1-221
NTMX77 in an RSC-M Vol. 7, 1-234
NTMX77 in an RSC-S (DS-1) Model A RCC2 Vol. 7, 1-241
NTMX77 in an RSC-S (DS-1) Model B RCC2 Vol. 7, 1-254
NTMX77 in an RSC-S (PCM-30) Model A RCO2 Vol. 7, 1-267
NTMX77 in an RSC-S (PCM-30) Model B RCO2 Vol. 7, 1-280
NTMX77 in an SMS Vol. 7, 1-293
NTMX77 in an SMS-R Vol. 7, 1-306
NTMX77 in an SMU Vol. 7, 1-318
NTMX79 in an RSC EXT Vol. 7, 1-333
NTMX79 in an RSC-M Vol. 7, 1-343
NTMX79 in an RSC-S (DS-1) Model A EXT Vol. 7, 1-349
NTMX79 in an RSC-S (DS-1) Model B EXT Vol. 7, 1-359
NTMX79 in an RSC-S (PCM-30) Model A EXT Vol. 7, 1-370
NTMX79 in an RSC-S (PCM-30) Model B EXT Vol. 7, 1-380
NTMX79 in an SMA2 Vol. 7, 1-390
NTMX81 in an RSC RCC2 Vol. 7, 1-397
NTMX81 in an RSC-S (DS-1) Model A RCC2 Vol. 7, 1-409
NTMX81 in an RSC-S (DS-1) Model B RCC2 Vol. 7, 1-421
NTMX81 in an SMA2 Vol. 7, 1-435
NTMX81 in a STAR Vol. 7, 1-451
NTMX82 in an RSC-M Vol. 7, 1-465
NTMX82 in an RSC-S (PCM-30) Model A RCO2 Vol. 7, 1-476
NTMX82 in an RSC-S (PCM-30) Model B RCO2 Vol. 7, 1-486
NTMX87 in an RSC-M Vol. 7, 1-496

NTMX87 in an RSC RCC2 Vol. 7, 1-508
NTMX87 in an RSC-S (DS-1) Model A RCC2 Vol. 7, 1-528
NTMX87 in an RSC-S (DS-1) Model B RCC2 Vol. 7, 1-548
NTMX87 in an RSC-S (PCM-30) Model A RCO2 Vol. 7, 1-571
NTMX87 in an RSC-S (PCM-30) Model B RCO2 Vol. 7, 1-592
NTMX87 in an SMA2 Vol. 7, 1-613
NTRX41 in an IOPAC MSP Vol. 7, 1-630
NTRX41 in an OPAC MSP Vol. 7, 1-635
NTRX41 in an RSC-M/MSP Vol. 7, 1-640
NTRX41 in an RSC MSP Vol. 7, 1-645
NTRX41 in an RSC-S (DS-1) Model B MSP Vol. 7, 1-650
NTRX41 in an SMA2 MSP Vol. 7, 1-655
NTRX42 in an IOPAC MSP Vol. 7, 1-660
NTRX42 in an OPAC MSP Vol. 7, 1-677
NTRX42 in an RSC-M/MSP Vol. 7, 1-695
NTRX42 in an RSC MSP Vol. 7, 1-707
NTRX42 in an RSC-S (DS-1) Model B MSP Vol. 7, 1-726
NTRX42 in an RSC-S (PCM-30) Model B MSP Vol. 7, 1-746
NTRX42 in an SMA2 MSP Vol. 7, 1-766
NTRX43 in an IOPAC MSP Vol. 7, 1-778
NTRX43 in an OPAC MSP Vol. 7, 1-785
NTRX43 in an RSC-M/MSP Vol. 7, 1-792
NTRX43 in an RSC MSP Vol. 7, 1-800
NTRX43 in an RSC-S (DS-1) Model B MSP Vol. 7, 1-808
NTRX43 in an SMA2 MSP Vol. 7, 1-816
NTRX44 in an IOPAC MSP Vol. 7, 1-824
NTRX44 in an OPAC MSP Vol. 7, 1-836
NTRX44 in an RSC MSP Vol. 7, 1-848
NTRX44 in an RSC-S (DS-1) Model B MSP Vol. 7, 1-858
NTRX54 in an RSC-M/MSP Vol. 7, 1-868
NTRX54 in an RSC MSP Vol. 7, 1-875
NTRX54 in an RSC-S (DS-1) Model B MSP Vol. 7, 1-882
NTRX54 in an SMA2 MSP Vol. 7, 1-889
NTRX66 MSP Vol. 7, 1-896
NTTR46 in an RLD Vol. 7, 1-902
NTTR47 in an RLD Vol. 7, 1-908
NTTR60 in a STAR Vol. 7, 1-914
NTTR66 in an RLD Vol. 7, 1-921
NTTR67 in an RLD Vol. 7, 1-927
NTTR70 in an RLD Vol. 7, 1-934
NTTR71 in an RLD Vol. 7, 1-941
NTTR72 in an RLD Vol. 7, 1-946
NTTR73 in a STAR Vol. 7, 1-952
NTTR74 in a STAR Vol. 7, 1-956
NTTR75 in a STAR Vol. 7, 1-962
NTTR76 in a STAR Vol. 7, 1-970
NTTR77 in a STAR Vol. 7, 1-979
NTTR87 in a STAR Vol. 7, 1-986

1 XPM card replacement procedures

This chapter provides the card replacement procedures for the XMS-based peripheral modules (XPM).

NT0X10 in an IOPAC RMM

Application

Use this procedure to replace the following card in a remote maintenance module (RMM).

PEC	Suffix	Name
NT0X10	AA	Miscellaneous scan card

Common procedures

The procedure “Replacing a card" is referenced in this procedure.

Action

The following flowchart is only a summary of the procedure. To replace the card, use the instructions in the step-action procedure that follows the flowchart.

NT0X10 in an IOPAC RMM (continued)

Summary of card replacement procedure for NT0X10 card in an RMM

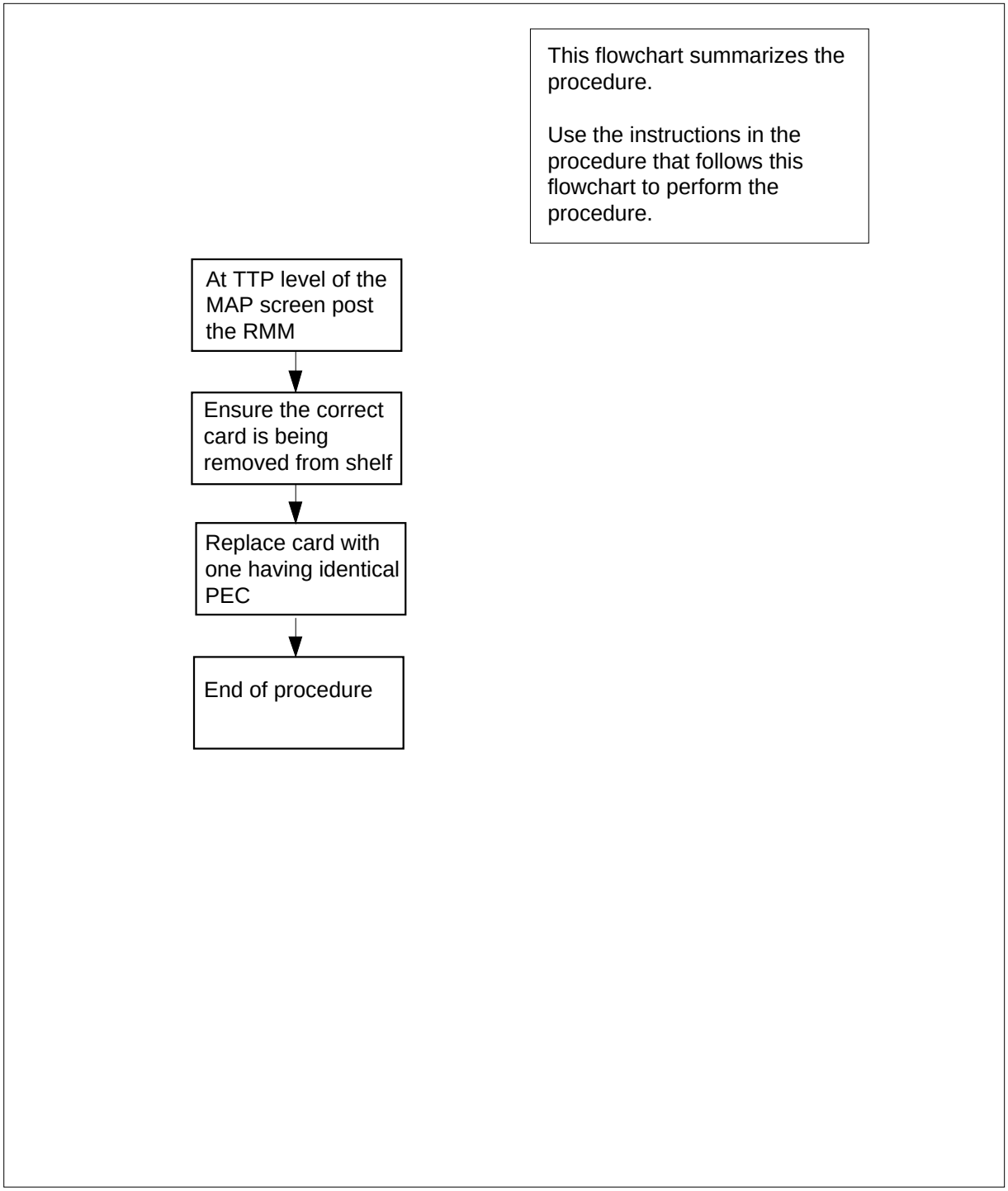

NT0X10 in an IOPAC RMM (continued)

Replacing an NT0X10 in an RMM

At the MAP

1

CAUTION
Loss of service
This procedure includes directions to manually busy one or more peripheral module (PM) units. Since manually busying a PM unit can cause service degradation, perform this procedure only if necessary to restore out of service components. Otherwise. carry out this procedure during periods of low traffic.

Obtain a replacement card. Ensure the replacement card has the same product equipment code (PEC), including suffix, as the card to be removed.

2 If you were directed to this procedure from the *Alarm Clearing Procedures*, go to step 5. Otherwise, continue with step 3.

At the MAP terminal

3 Access the trunk test position (TTP) level and post the RMM that contains the card to be replaced by typing

```
>MAPCI;MTC;TRKS;TTP;POST P RMM rmm_no ckt_no to ckt_no
```

and pressing the Enter key.

where

rmm_no
is the number of the RMM shelf where the card is to be replaced

ckt_no
is the number of the circuit associated with the card to be replaced

4 Ensure the correct circuit card is removed from the shelf by typing

```
>CKTLOC
```

and pressing the Enter key.

NT0X10 in an IOPAC RMM (end)

At the RMM

5

DANGER
Static electricity damage
Wear a wrist strap connected to the wrist strap grounding point at the top of each equipment rack, (Bay 0, 1, 2, and 3), while handling circuit cards. This protects the cards against damage caused by static electricity.

Replace the NT0X10 card using the procedure “Replacing a card." When you have completed the procedure, return here.

6 If you were directed to this procedure from the *Alarm Clearing Procedures*, return now to the alarm clearing procedure that directed you here. Otherwise, continue with step 7.

7 Send any faulty cards for repair according to local procedure.

8 Record the following items in office records:

- date the card was replaced
- serial number of the card
- symptoms that prompted replacement of the card

Go to step 9.

9 You have completed this procedure.

NT0X10 in an OPM RMM

Application

Use this procedure to replace the following card in an RMM.

PEC	Suffixes	Name
NT0X10	AA	Miscellaneous Scan Card (SC)

Common procedures

The replacing a card procedure is referenced in this procedure.

Action

The following flowchart is a summary of the procedure. To replace the card, use the instructions in the procedure that follows the flowchart.

NT0X10
in an OPM RMM (continued)

Summary of card replacement procedure for an NT0X10 card in an RMM

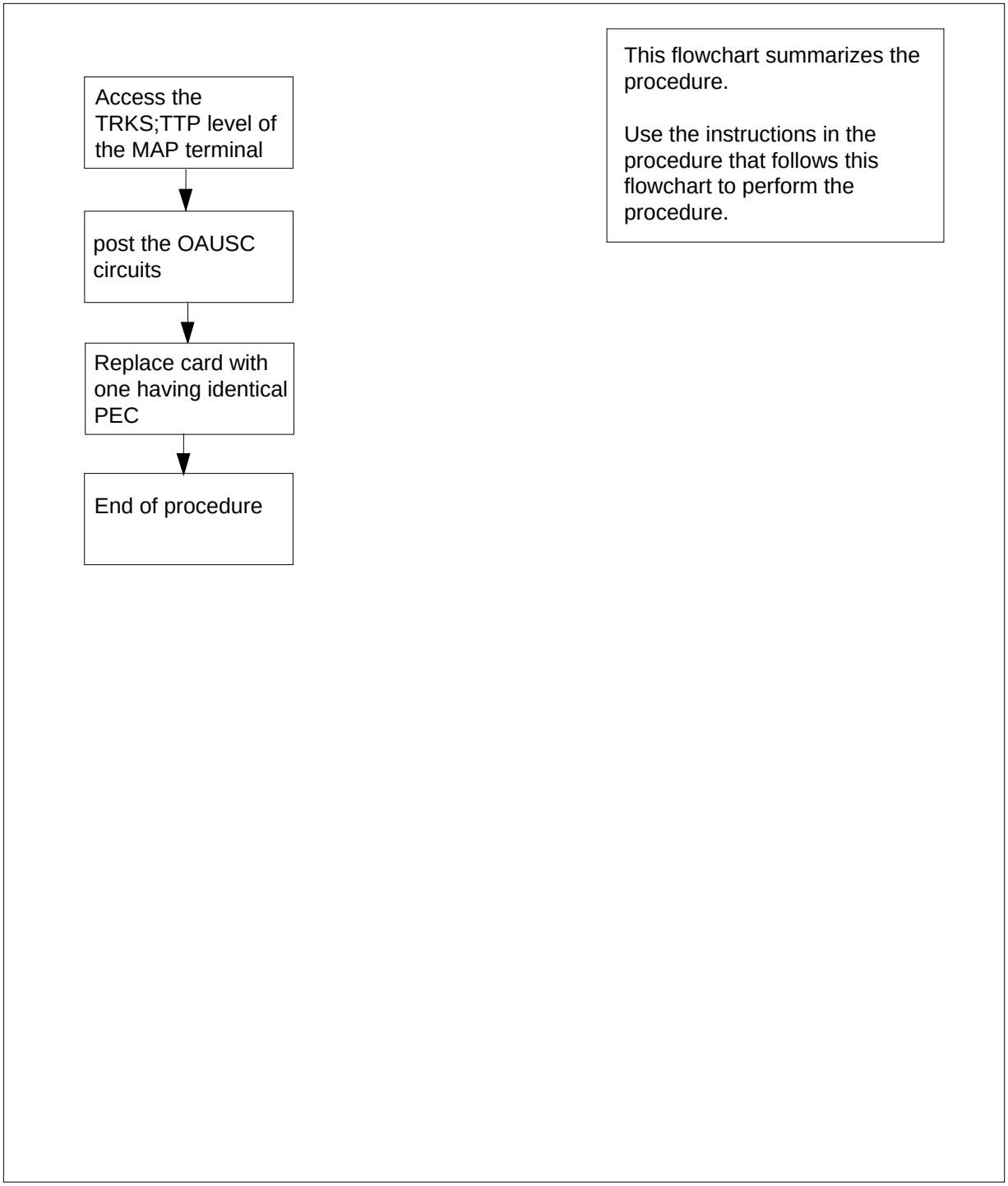

NT0X10 in an OPM RMM (continued)

Replacing an NT0X10 card in an RMM

At your current location

1 Obtain a replacement card. Ensure that the replacement card has the same product equipment code (PEC), including suffix, as the card to be removed.

At the MAP display

2 Access the TTP level of the MAP and post the scan points on the card to be replaced by tying

`>MAPCI;MTC;TRKS;TTP;POST P RMM rmm_no ckt_no`

and pressing the Enter key.

rmm_no
is the number of the RMM with the faulty NT0X10 card.

ckt_no
is the number of the first scan point (SC) of the seven SC points on this card.

Example of a MAP display response:

```
LAST CIRCUIT = 14
POST CKT IDLED
SHORT CLLI IS:  1146
OK, CLLI POSTED

POST  13   DELQ       BUSY Q          DIG
TTP 6-006
CKT TYPE   PM NO.     COM LANG        STA S R DOT TE R
OG TESTEQ  RMM 0 0     OAUSC    0     IDL
```

At the RMM shelf

3

DANGER
Static electricity damage
Wear a wrist strap connected to the wrist strap grounding point of a frame supervisory panel (FSP) while handling circuit cards. This protects the cards against damage caused by static electricity.

Replace the NT0X10 card using the common replacing a card procedure in this document. When you have completed the procedure, return to this point, otherwise go to step 6.

4 Send any faulty cards for repair according to local procedure.

NT0X10 in an OPM RMM (end)

5 Record the following items in office records:

- date the card was replaced
- serial number of the card
- symptoms that prompted replacement of the card

Go to step 7.

6 Obtain further assistance in replacing this card by contacting the personnel responsible for higher level of support.

7 You have completed this procedure.

NT0X10 in an RLCM-EDC RMM

Application

Use this procedure to replace the following card in the shelves or frames identified in the following table:

PEC	Suffixes	Cardname	Shelf/frame name
NT0X10	AA	Miscellaneous Scan Card (SC)	RMM/RLCC

If you cannot identify the product engineering code (PEC), PEC suffix, shelf or frame for the card to replace, refer to the Index. The Index lists cards, shelves, and frames documented in this maintenance manual.

Common procedures

This procedure references the replacing a card procedure.

Action

This procedure contains a summary flowchart and a list of steps. Use the flowchart to review the procedure. Follow the steps to perform the procedure.

NT0X10
in an RLCM-EDC RMM (continued)

Summary of replacing an NT0X10 card in RMM

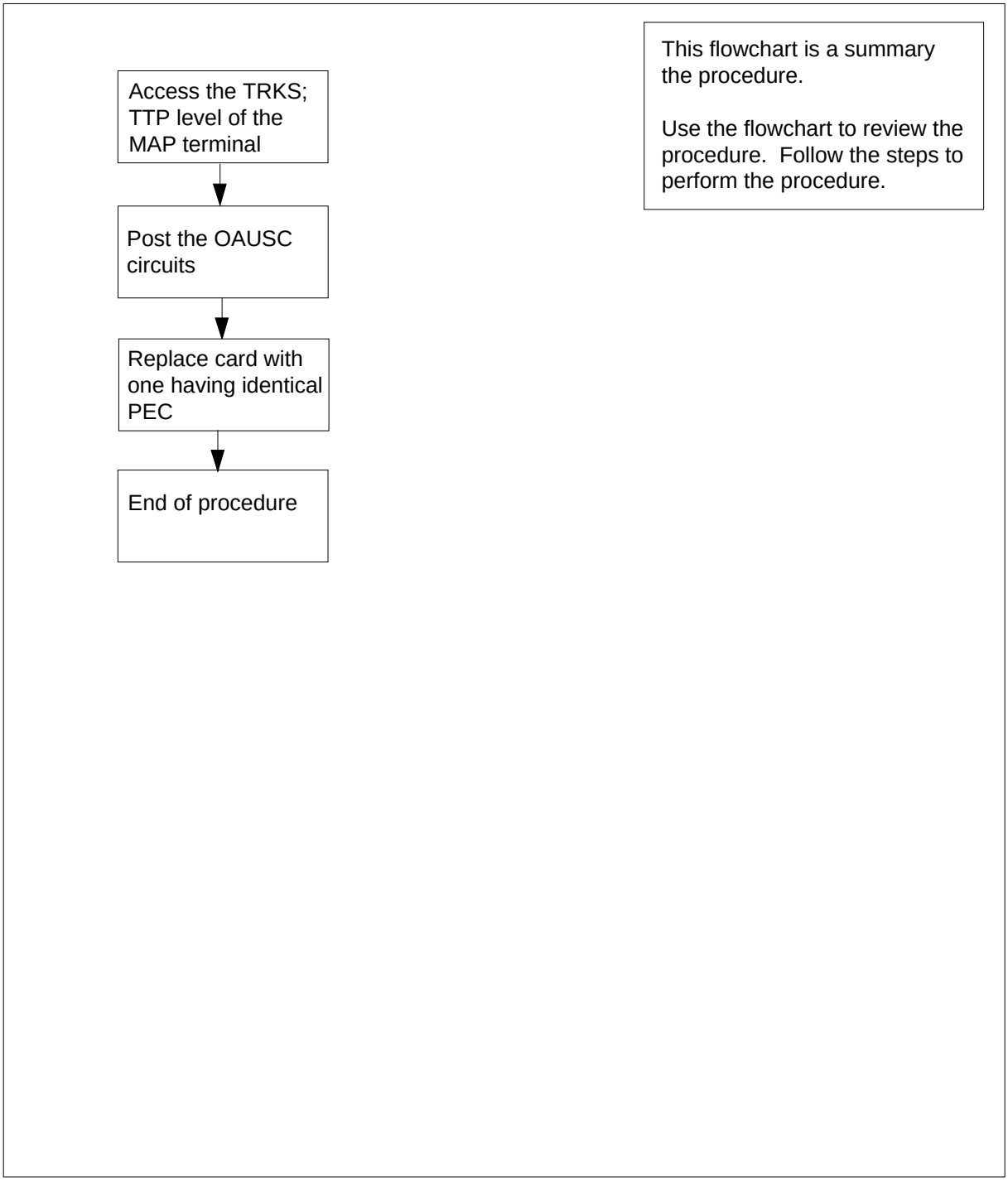

NT0X10 in an RLCM-EDC RMM (continued)

Replacing an NT0X10 in RMM

At your current location

1 Obtain a replacement card. Make sure that the replacement card has the same PEC, PEC suffix, as the card removed.

At the MAP display

2 To access the Trunk Test Position (TTP) level of the MAP terminal and post the SC associated with the defective card, type:

`>MAPCI;MTC;TRKS;TTP;POST P RMM rmm_no ckt_no`

and press the Enter key.

where

rmm_no
is the number of the RMM with the defective NT0X10 card

ckt_no
is the number of the first scan point of the seven SC points on this card.

Example of a MAP display response:

```
LAST CIRCUIT = 14
POST CKT IDLED
SHORT CLLI IS:  1146
OK, CLLI POSTED

POST  13   DELQ       BUSY Q          DIG
TTP 6–006
CKT TYPE   PM NO.     COM LANG        STA S R DOT TE R
OG TESTEQ  RMM 0 0     OAUSC    0     IDL
```

NT0X10 in an RLCM-EDC RMM (end)

At the RMM shelf

3

WARNING
Static electricity damage
Wear a wrist strap that connects to the wrist-strap grounding point of a frame supervisory panel (FSP) to handle circuit cards. The wrist strap protects the cards against static electricity damage.

To replace the NT0X10 card use the common replacing a card procedure in this document. When you complete the procedure, return to this point or go to step 7.

4 To clear the trunk test position, type:

```
>NEXT
```

and press the Enter key.

Note: Repeat this command until the system clears the TTP control position.

5 Send any defective cards for repair according to local procedure.

6 Record the following items in office records:

- date you replaced the card
- serial number of the card
- problems that prompted replacement of the card.

Go to step 8.

7 For additional help, contact the next level of support.

8 This procedure is complete.

NT0X10 in an RLCM RMM

Application

Use this procedure to replace the following card in an RMM.

PEC	Suffixes	Name
NT0X10	AA	Miscellaneous Scan Card (SC)

Common procedures

The replacing a card procedure is referenced in this procedure.

Action

The following flowchart is a summary of the procedure. To replace the card, use the instructions in the procedure that follows the flowchart.

NT0X10
in an RLCM RMM (continued)

Summary of card replacement for an NT0X10 card in RMM

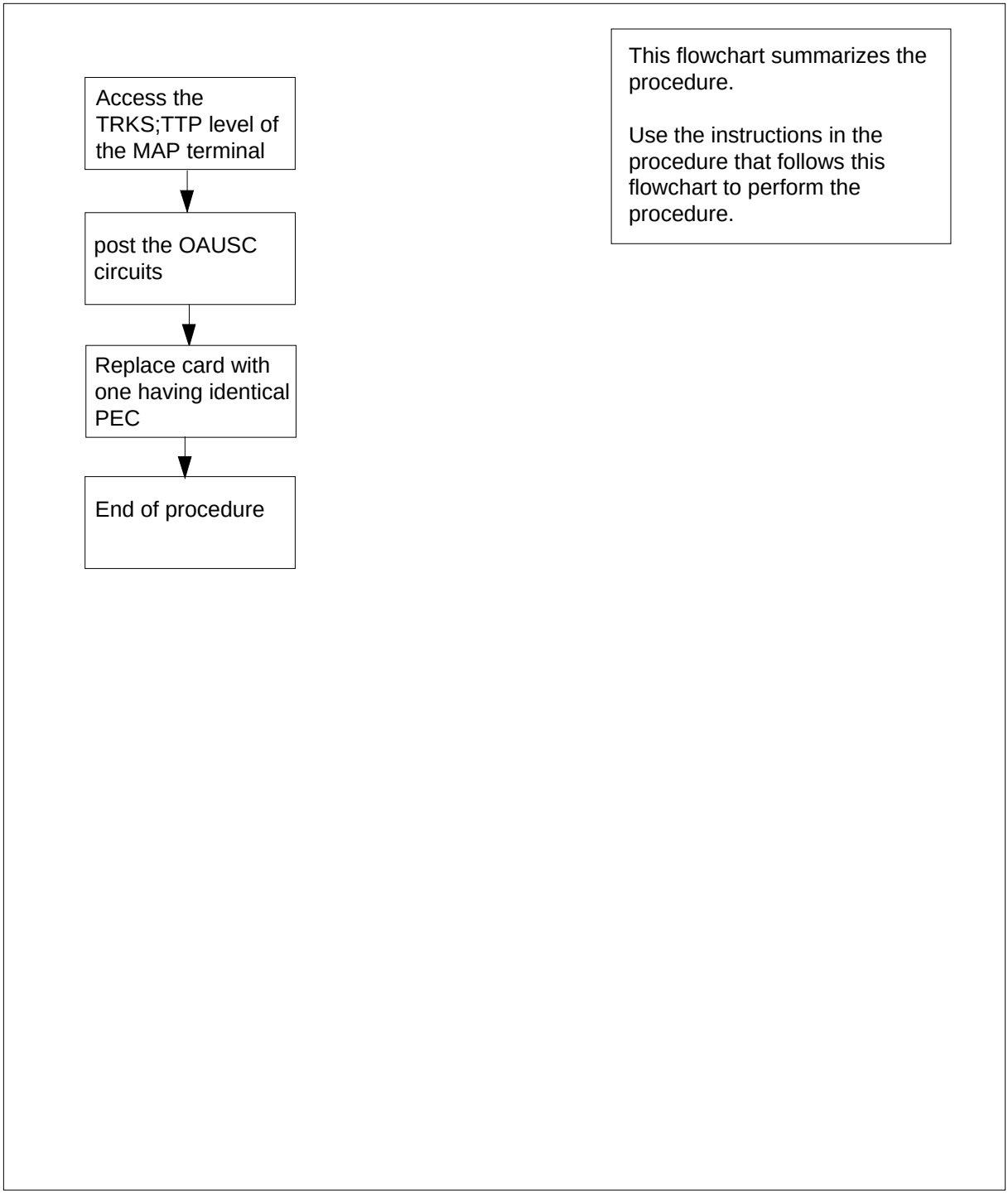

NT0X10 in an RLCM RMM (continued)

Replacing an NT0X10 card in an RMM

At your current location

1 Obtain a replacement card. Ensure that the replacement card has the same product equipment code (PEC), including suffix, as the card to be removed.

At the MAP display

2 Access the TTP level of the MAP and post the scan points on the card to be replaced by tying

`>MAPCI;MTC;TRKS;TTP;POST P RMM rmm_no ckt_no`

and pressing the Enter key.

rmm_no
is the number of the RMM with the faulty NT0X10 card.

ckt_no
is the number of the first scan point (SC) of the seven SC points on this card.

Example of a MAP display response:

```
LAST CIRCUIT = 14
POST CKT IDLED
SHORT CLLI IS:  1146
OK, CLLI POSTED

POST  13   DELQ       BUSY Q          DIG
TTP 6-006
CKT TYPE   PM NO.     COM LANG        STA S R DOT TE R
OG TESTEQ  RMM 0 0     OAUSC    0     IDL
```

At the RMM shelf

3

DANGER
Static electricity damage
Wear a wrist strap connected to the wrist strap grounding point of a frame supervisory panel (FSP) while handling circuit cards. This protects the cards against damage caused by static electricity.

Replace the NT0X10 card using the common replacing a card procedure in this document. When you have completed the procedure, return to this point, otherwise go to step 6.

4 Send any faulty cards for repair according to local procedure.

NT0X10 in an RLCM RMM (end)

5 Record the following items in office records:

- date the card was replaced
- serial number of the card
- symptoms that prompted replacement of the card

Go to step 7.

6 Obtain further assistance in replacing this card by contacting the personnel responsible for higher level of support.

7 You have completed this procedure.

NT0X10 in an RSC RMM

Application

Use this procedure to replace the following card in an RMM.

PEC	Suffixes	Name
NT0X10	AA	Miscellaneous scan card (MSC)

Common Procedures

None

Action

The following flowchart is a summary of the procedure. To replace the card, use the instructions in the procedure that follows the flowchart.

NT0X10
in an RSC RMM (continued)

Summary of card replacement procedure for NT0X10 in an RSC RMM

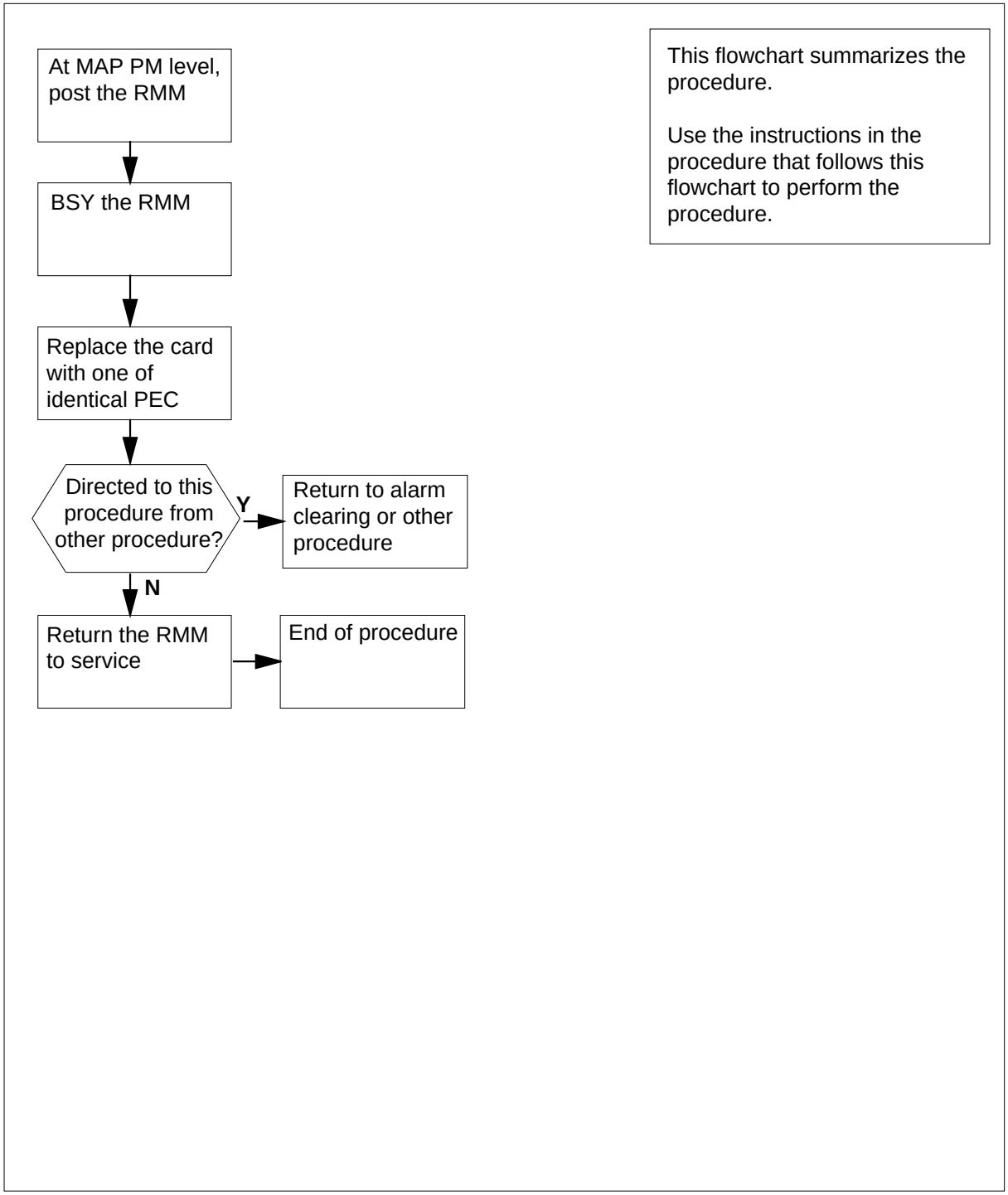

NT0X10 in an RSC RMM (continued)

Replacing an NT0X10 card in RSC RMM

At your current location:

1 Proceed only if you were either directed to this card replacement procedure from a step in a maintenance procedure, are using the procedure to verify or accept cards, or were directed to this procedure by your maintenance support group.

2 Obtain a replacement card. Ensure the replacement card has the same product equipment code (PEC) including suffix, as the card to be removed.

At the MAP display

3 Access the PM level and post the RMM by typing

>MAPCI;MTC;PM;POST RMM rmm_no

and pressing the Enter key.

where

rmm_no
is the number of the RMM where the card is to be removed

Example of a MAP display response:

```
   CM    MS    IOD    Net    PM    CCS    LNS    Trks    Ext    APPL
    .     .      .      .   4SysB   .      .       .      .      .

RMM               SysB     ManB     OffL     CBsy     ISTb      InSv
 0 Quit    PM        4        0       10        3        3       130
 2 Post_   RMM       0        1        1        0        0         2
 3
 4         RMM  5  INSV
 5 Trnsl
 6 Tst
 7 Bsy
 8 RTS
 9 OffL
10 LoadPM
11 Disp_
12 Next
13
14 QueryPM
15
16
17
18
```

4 Busy the RMM by typing

>BSY

and pressing the Enter key.

Example of a MAP display response:

NT0X10
in an RSC RMM (continued)

```
   CM     MS     IOD     Net     PM     CCS     LNS     Trks     Ext     APPL
   .      .       .       .    4SysB    .       .        .       .       .

RMM                SysB      ManB      OffL      CBsy      ISTb       InSv
 0 Quit    PM         4         0        10         3         3        130
 2 Post_   RMM        0         1         1         0         0          2
 3
 4         RMM  5  ManB
 5 Trnsl
 6 Tst
 7 Bsy
 8 RTS
 9 OffL
10 LoadPM
11 Disp_
12 Next
13
14 QueryPM
15
16
17
18
```

At the RMM shelf

5

CAUTION
Static discharge may cause damage to circuit packs
Put on a wrist strap and connect it to the frame of the RMM before removing or inserting any cards. This protects the RMM against service degradation caused by static electricity.

Put on a wrist strap.

6

DANGER
Equipment damage
Take these precautions when removing or inserting a card:

1. Do not apply direct pressure to the components.
2. Do not force the cards into the slots.

Remove the NT0X10 card as shown in the following figures.

a Locate the card to be removed on the appropriate shelf.

NT0X10
in an RSC RMM (continued)

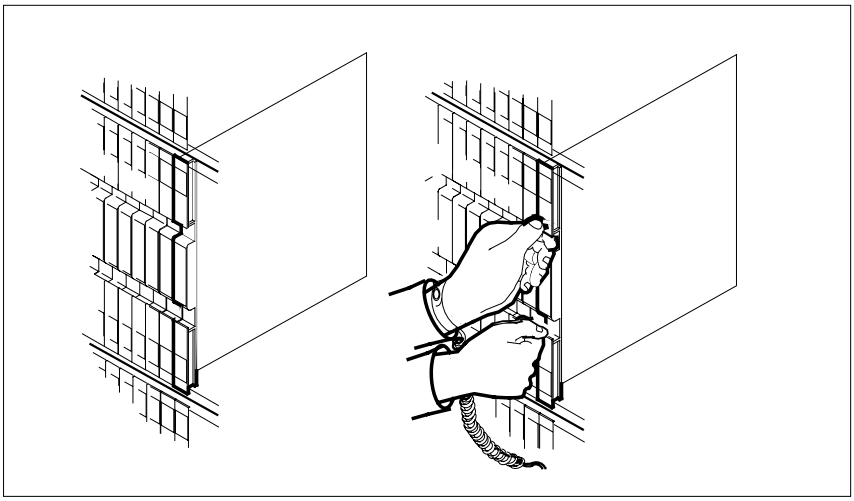

b Open the locking levers on the card to be replaced and gently pull the card towards you until it clears the shelf.

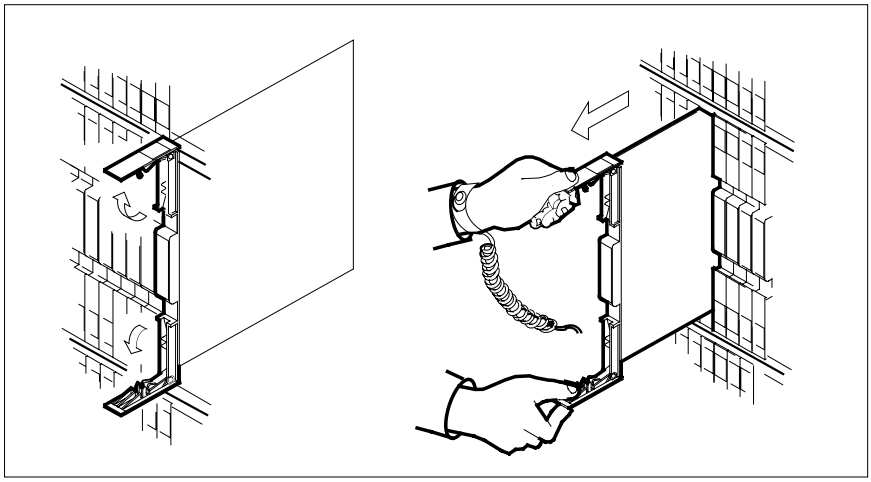

c Ensure the replacement card has the same PEC, including suffix, as the card you just removed.

7 Open the locking levers on the replacement card.

Align the card with the slots in the shelf and gently slide the card into the shelf.

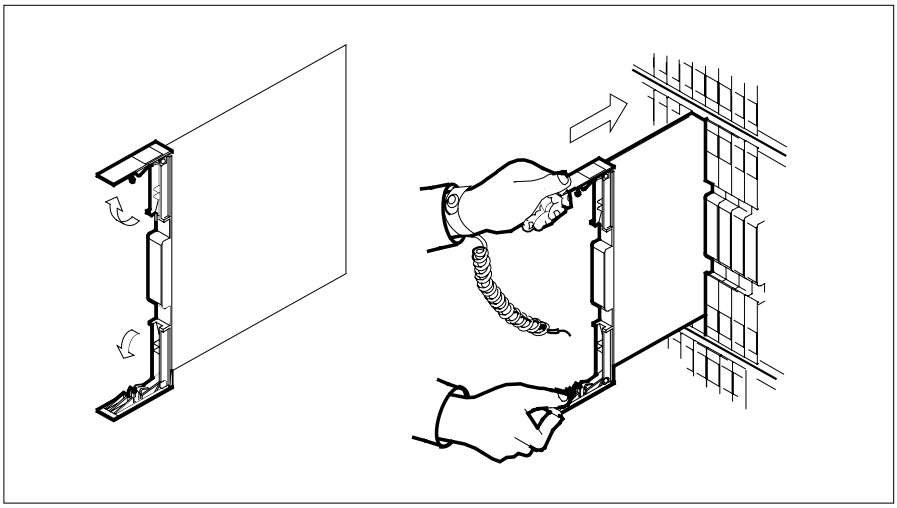

8 Seat and lock the card.

a Using your fingers or thumbs, push on the upper and lower edges of the faceplate to ensure the card is fully seated in the shelf.

b Close the locking levers.

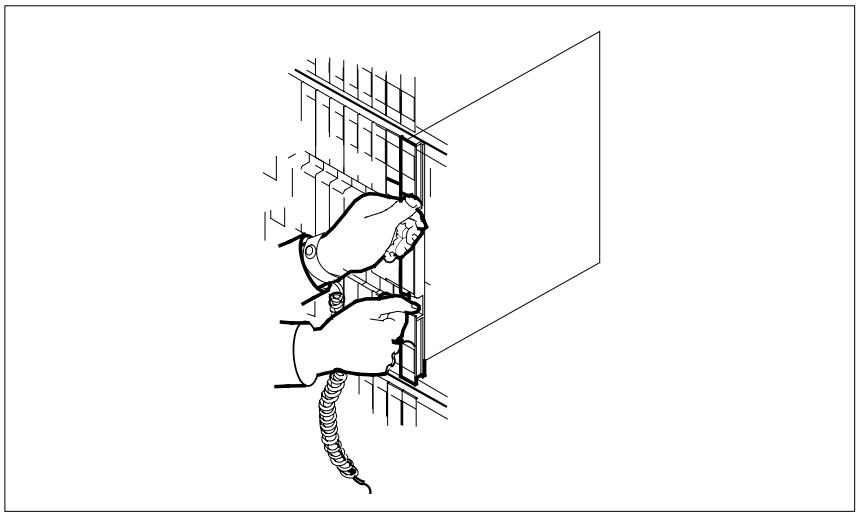

9 Use the following information to determine the next step in this procedure.

If you entered this procedure	Do
from an alarm clearing procedure	step 15
from other	step 10

NT0X10 in an RSC RMM (end)

At the MAP display

10 Test the RMM by typing

>TST

and pressing the Enter key.

Example of a MAP display response:

```
Test Passed
    or
Test Failed
```

If the TST	Do
passed	step 11
failed	step 15

11 Return the RMM to service by typing

>RTS

and pressing the Enter key.

If the RTS	Do
passed	step 12
failed	step 16

12 Send any faulty cards for repair according to local procedure.

13 Record the following items in office records:

- date the card was replaced
- serial number of the card
- symptoms that prompted replacement of the card

14 Go to step 17.

15 Return to the procedure that directed you to this card replacement procedure. If necessary, go to the point where the faulty card list was produced, identify the next faulty card on the list, and go to the appropriate replacement procedure in this manual for that card.

16 Obtain further assistance in replacing this card by contacting personnel responsible for higher level of support.

17 You have successfully completed this procedure. Return to the maintenance procedure that directed you to this card replacement procedure and continue as directed.

NT0X10 in an RSC-S (DS-1) Model A RMM

Application

Use this procedure to replace an NT0X10 card in an RSC-S RMM.

PEC	Suffixes	Name
NT0X10	AA	Miscellaneous Scan Card (MSC)

Common procedures

None

Action

The following flowchart is only a summary of the procedure. To replace the card, use the instructions in the procedure that follows the flowchart.

Summary of card replacement procedure for an NT0X10 card in RSC-S RMM

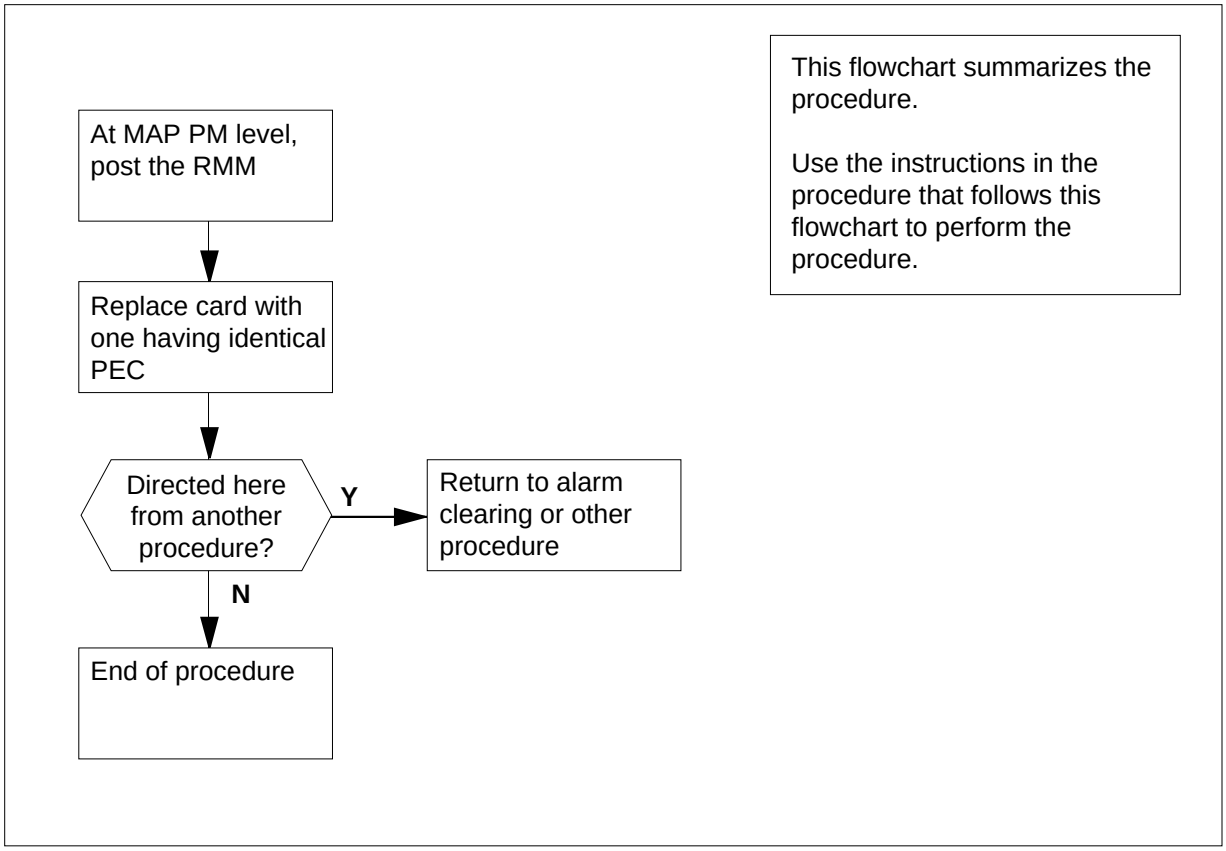

NT0X10
in an RSC-S (DS-1) Model A RMM (continued)

Replacing an NT0X10 card in RSC-S RMM

At the MAP terminal

1 Proceed only if you have been directed to this card replacement procedure from a step in a maintenance procedure, are using the procedure for verifying or accepting cards, or have been directed to this procedure by your maintenance support group.

2 Obtain a replacement card. Ensure that the replacement card has the same product equipment code (PEC), including suffix, as the card to be removed.

3 Access the PM level and post the RMM by typing

>MAPCI;MTC;PM;POST RMM rmm_no

and pressing the Enter key.

where

rmm_no
is the number of the RMM from which the card is to be removed

Example of a MAP display:

```
CM     MS    IOD    Net    PM    CCS    LNS    Trks    Ext   Appl
 .      .     .      .      .     .      .      .       .      .

RMM               SysB     ManB     OffL     CBsy     ISTb      InSv
 0 Quit    PM        0        0        0        0        0       130
 2 Post_   RMM       0        0        0        0        0         0
 3
 4         RMM  5  INSV
 5 Trnsl
 6 Tst
 7 Bsy
 8 RTS
 9 OffL
10 LoadPM
11 Disp_
12 Next
13
14 QueryPM
15
16
17
18
```

4 Busy the RMM by typing

>BSY

and pressing the Enter key.

Example of a MAP display:

NT0X10
in an RSC-S (DS-1) Model A RMM (continued)

```
CM     MS    IOD    Net    PM    CCS    LNS    Trks     Ext   Appl
 .      .     .      .    1ManB   .      .      .        .     .

RMM               SysB     ManB     OffL     CBsy     ISTb     InSv
 0 Quit    PM        4        0       10        0        0      130
 2 Post_   RMM       0        1        0        0        0        0
 3
 4         RMM  5  INSV
 5 Trnsl
 6 Tst
 7 Bsy
 8 RTS
 9 OffL
10 LoadPM
11 Disp_
12 Next
13
14 QueryPM
15
16
17
18
```

At the RMM shelf

5

DANGER
Static discharge may cause damage to circuit packs
Put on a wrist strap and connect it to the frame of the RMM before removing any cards. This protects the RMM against service degradation caused by static electricity.

Put on a wrist strap.

6 Remove the NT0X10 card as shown in the following figures.

a Locate the card to be removed on the appropriate shelf.

NT0X10
in an RSC-S (DS-1) Model A RMM (continued)

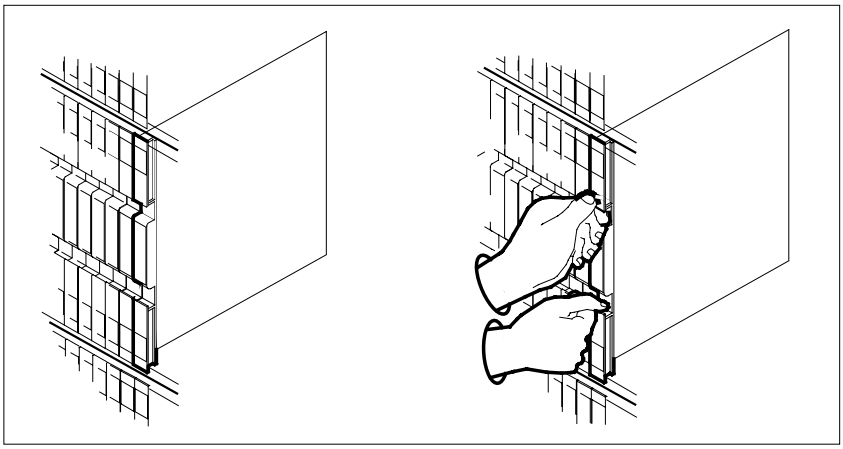

b Open the locking levers on the card to be replaced and gently pull the card toward you until it clears the shelf.

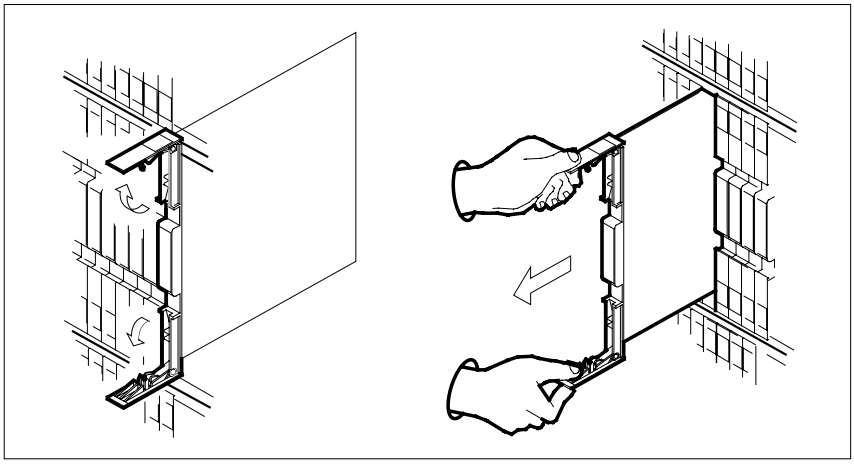

c Ensure the replacement card has the same PEC, including suffix, as the card you just removed.

d Set the switch settings on the card to match those of the card you are replacing.

7 Open the locking levers on the replacement card.

a Align the card with the slots in the shelf.

b Gently slide the card into the shelf.

NT0X10
in an RSC-S (DS-1) Model A RMM (continued)

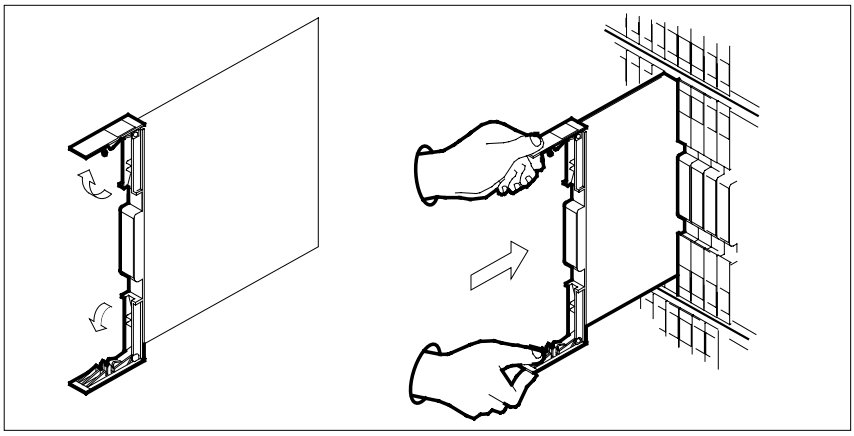

8

DANGER
Equipment damage
Take these precautions when removing or inserting a card:

1. Do not apply direct pressure to the components.
2. Do not force the card into its slot.

Seat and lock the card.

a Using your fingers or thumbs, push on the upper and lower edges of the faceplate to ensure the card is fully seated in the shelf.

b Close the locking levers.

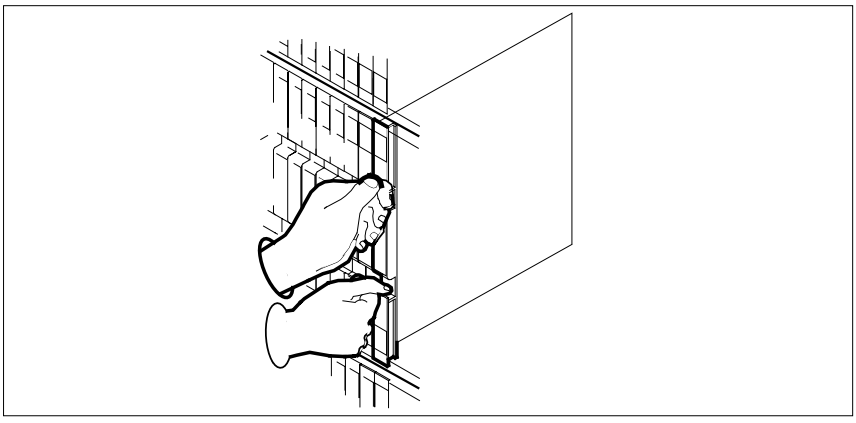

NT0X10 in an RSC-S (DS-1) Model A RMM (end)

9 Use the following information to determine what step to go to next in this procedure.

If you entered this procedure from	Do
alarm clearing procedures	step 12
other	step 10

10 Send any faulty cards for repair according to local procedure.

11 Record the date the card was replaced, the serial number of the card, and the symptoms prompted by replacement of the card. Go to step 14.

12 Return to the procedure that directed you to this procedure. At the point where a faulty card list was produced, identify the next faulty card on the list and go to the appropriate card replacement procedure for that card in this manual.

13 Obtain further assistance in replacing this card by contacting the personnel responsible for higher level of support.

14 You have successfully completed this procedure. Return to the maintenance procedure that directed you to this card replacement procedure and continue as directed.

NT0X10 in an RSC-S (DS-1) Model B RMM

Application

Use this procedure to replace an NT0X10 card in an RSC-S RMM.

PEC	Suffixes	Name
NT0X10	AA	Miscellaneous Scan Card (MSC)

Common procedures

None

Action

The following flowchart is only a summary of the procedure. To replace the card, use the instructions in the procedure that follows the flowchart.

Summary of card replacement procedure for an NT0X10 card in RSC-S RMM

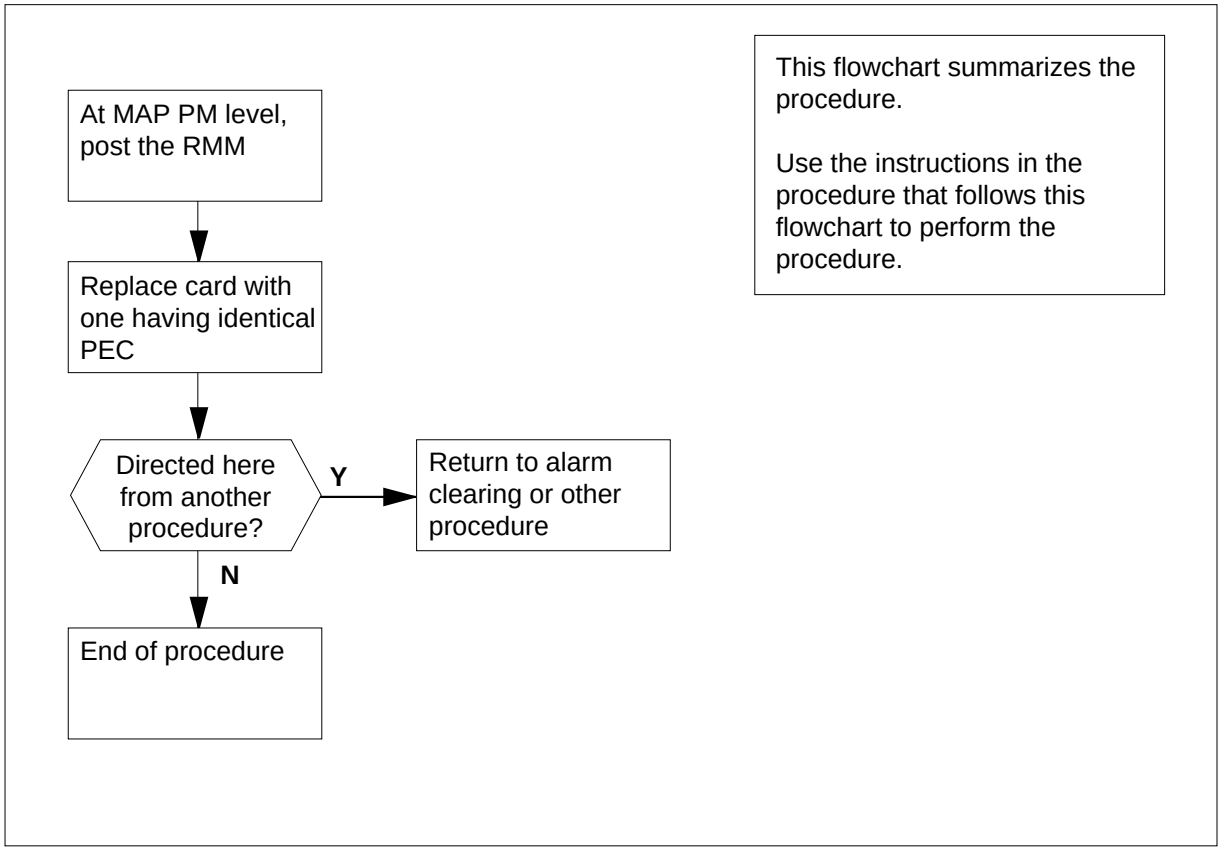

NT0X10
in an RSC-S (DS-1) Model B RMM (continued)

Replacing an NT0X10 card in RSC-S RMM

At the MAP terminal

1 Proceed only if you have been directed to this card replacement procedure from a step in a maintenance procedure, are using the procedure for verifying or accepting cards, or have been directed to this procedure by your maintenance support group.

2 Obtain a replacement card. Ensure that the replacement card has the same product equipment code (PEC), including suffix, as the card to be removed.

At the MAP

3 Access the PM level and post the RMM by typing

>MAPCI;MTC;PM;POST RMM rmm_no

and pressing the Enter key.

where

rmm_no
is the number of the RMM from which the card is to be removed

Example of a MAP display:

```
CM     MS     IOD     Net    PM    CCS    LNS    Trks     Ext   Appl
 .      .      .       .      .     .      .       .        .     .

RMM               SysB     ManB     OffL     CBsy     ISTb      InSv
 0 Quit    PM        0        0        0        0        0       130
 2 Post_   RMM       0        0        0        0        0         0
 3
 4         RMM  5  INSV
 5 Trnsl
 6 Tst
 7 Bsy
 8 RTS
 9 OffL
10 LoadPM
11 Disp_
12 Next
13
14 QueryPM
15
16
17
18
```

4 Busy the RMM by typing

>BSY

and pressing the Enter key.

Example of a MAP display:

NT0X10
in an RSC-S (DS-1) Model B RMM (continued)

```
CM     MS     IOD     Net    PM    CCS    LNS    Trks     Ext   Appl
 .      .      .       .    1ManB   .      .       .       .      .

RMM               SysB     ManB     OffL     CBsy     ISTb      InSv
 0 Quit    PM        4        0       10        0        0       130
 2 Post_   RMM       0        1        0        0        0         0
 3
 4         RMM  5  INSV
 5 Trnsl
 6 Tst
 7 Bsy
 8 RTS
 9 OffL
10 LoadPM
11 Disp_
12 Next
13
14 QueryPM
15
16
17
18
```

At the RMM shelf

5

DANGER
Static discharge may cause damage to circuit packs
Put on a wrist strap and connect it to the frame of the RMM before removing any cards. This protects the RMM against service degradation caused by static electricity.

Put on a wrist strap.

6 Remove the NT0X10 card as shown in the following figures.

a Locate the card to be removed on the appropriate shelf.

NT0X10
in an RSC-S (DS-1) Model B RMM (continued)

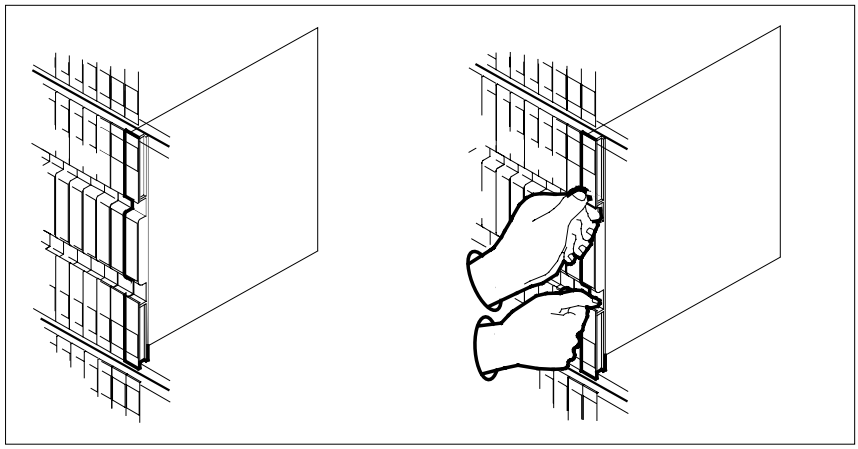

b Open the locking levers on the card to be replaced and gently pull the card toward you until it clears the shelf.

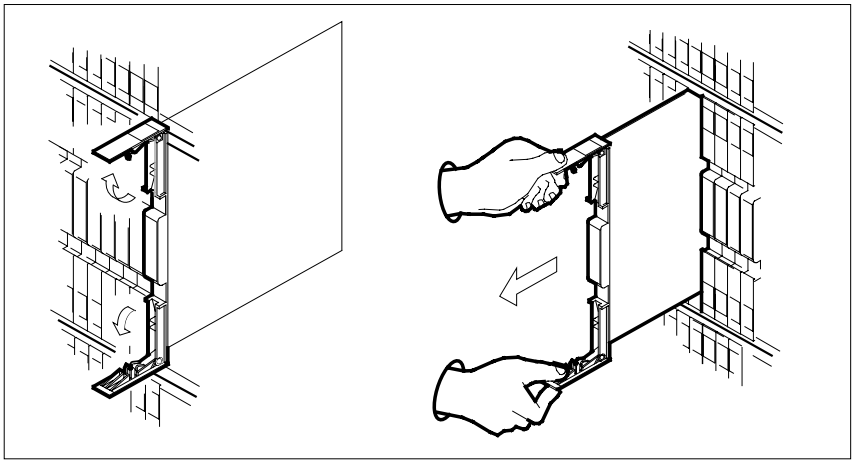

c Ensure the replacement card has the same PEC, including suffix, as the card you just removed.

d Set the switch settings on the card to match those of the card you are replacing.

7 Open the locking levers on the replacement card.

a Align the card with the slots in the shelf.

b Gently slide the card into the shelf.

NT0X10
in an RSC-S (DS-1) Model B RMM (continued)

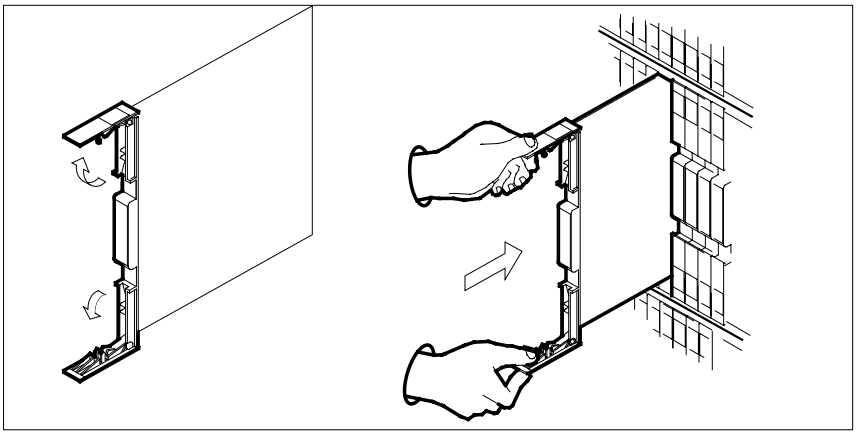

8

DANGER
Equipment damage
Take these precautions when removing or inserting a card:

1. Do not apply direct pressure to the components.
2. Do not force the card into its slot.

Seat and lock the card.

a Using your fingers or thumbs, push on the upper and lower edges of the faceplate to ensure the card is fully seated in the shelf.

b Close the locking levers.

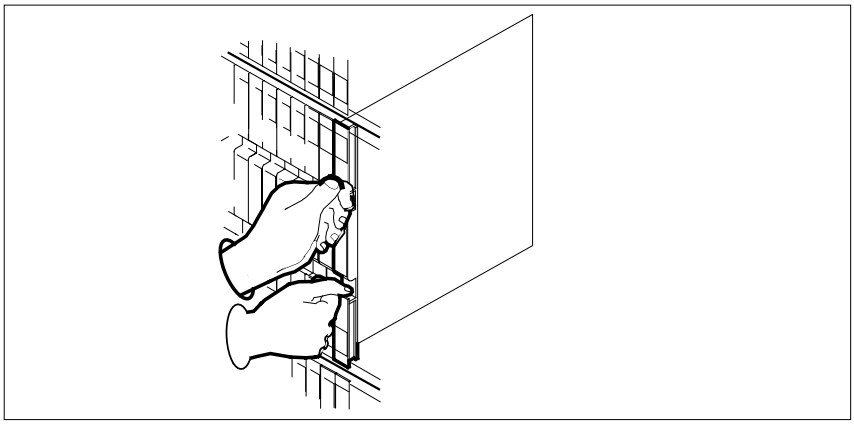

NT0X10
in an RSC-S (DS-1) Model B RMM (end)

9 Use the following information to determine what step to go to next in this procedure.

If you entered this procedure from	Do
alarm clearing procedures	step 12
other	step 10

10 Send any faulty cards for repair according to local procedure.

11 Record the date the card was replaced, the serial number of the card, and the symptoms prompted by replacement of the card. Go to step 14.

12 Return to the procedure that directed you to this procedure. At the point where a faulty card list was produced, identify the next faulty card on the list and go to the appropriate card replacement procedure for that card in this manual.

13 Obtain further assistance in replacing this card by contacting the personnel responsible for higher level of support.

14 You have successfully completed this procedure. Return to the maintenance procedure that directed you to this card replacement procedure and continue as directed.

NT0X10 in an RSC-S (PCM-30) Model A RMM

Application

Use this procedure to replace an NT0X10 card in an RSC-S RMM.

PEC	Suffixes	Name
NT0X10	AA	Miscellaneous Scan Card (MSC)

Common procedures

None

Action

The following flowchart is only a summary of the procedure. To replace the card, use the instructions in the procedure that follows the flowchart.

Summary of card replacement procedure for an NT0X10 card in RSC-S RMM

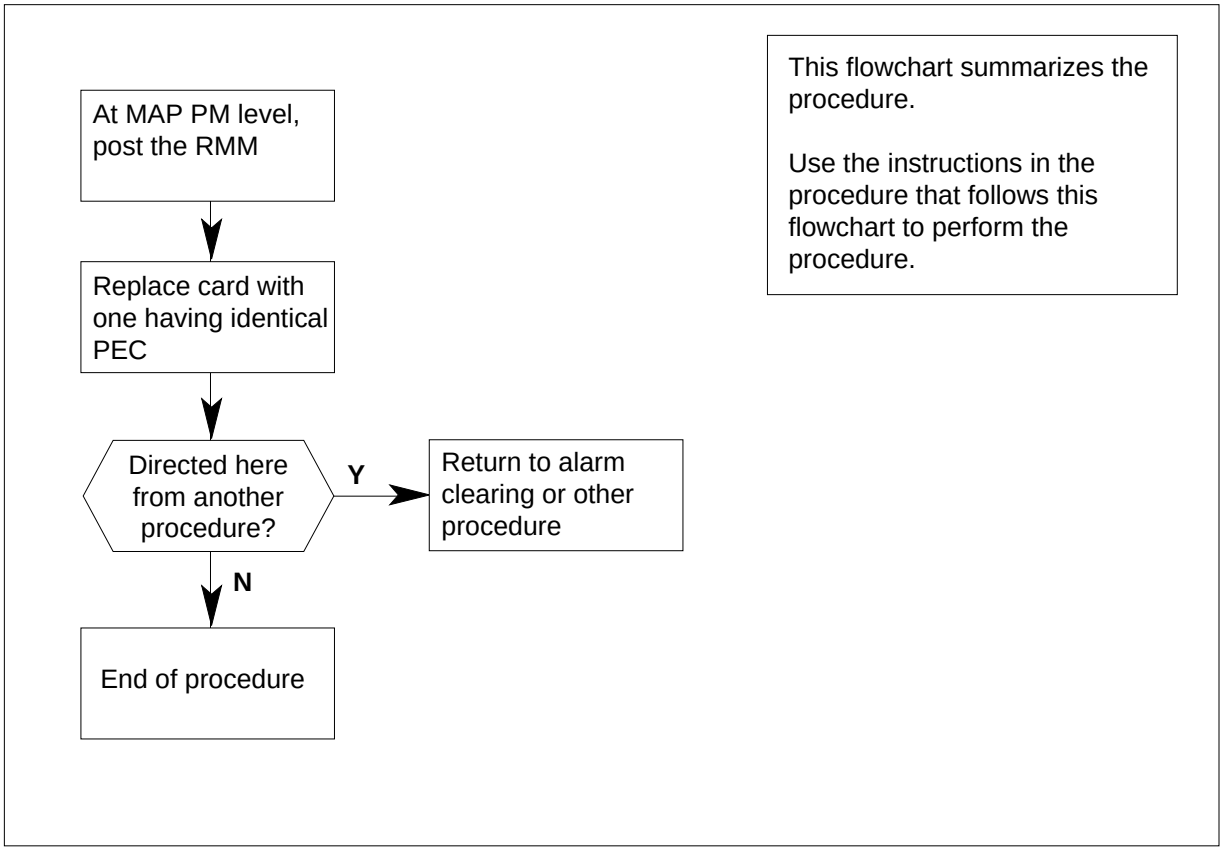

NT0X10 in an RSC-S (PCM-30) Model A RMM (continued)

Replacing an NT0X10 card in RSC-S RMM

At your current location

1 Proceed only if you have been directed to this card replacement procedure from a step in a maintenance procedure, are using the procedure for verifying or accepting cards, or have been directed to this procedure by your maintenance support group.

2 Obtain a replacement card. Ensure that the replacement card has the same product equipment code (PEC), including suffix, as the card to be removed.

At the MAP terminal

3 Access the PM level and post the RMM by typing

>MAPCI;MTC;PM;POST RMM rmm_no

and pressing the Enter key.

where

rmm_no
is the number of the RMM from which the card is to be removed

Example of a MAP display:

```
CM     MS     IOD     Net    PM    CCS    LNS    Trks     Ext   Appl
 .      .       .       .     .     .      .      .          .     .
RMM              SysB     ManB     OffL     CBsy     ISTb      InSv
 0 Quit    PM       0        0        0        0        0       130
 2 Post_   RMM      0        0        0        0        0         0
 3
 4         RMM  5  INSV
 5 Trnsl
 6 Tst
 7 Bsy
 8 RTS
 9 OffL
10 LoadPM
11 Disp_
12 Next
13
14 QueryPM
15
16
17
18
```

4 Busy the RMM by typing

>BSY

and pressing the Enter key.

Example of a MAP display:

NT0X10
in an RSC-S (PCM-30) Model A RMM (continued)

```
CM     MS     IOD     Net    PM    CCS    LNS    Trks     Ext   Appl
 .      .       .       .   1ManB   .      .      .     .        .     .
RMM               SysB     ManB     OffL     CBsy     ISTb      InSv
 0 Quit    PM        4        0       10        0        0       130
 2 Post_   RMM       0        1        0        0        0         0
 3
 4         RMM  5  INSV
 5 Trnsl
 6 Tst
 7 Bsy
 8 RTS
 9 OffL
10 LoadPM
11 Disp_
12 Next
13
14 QueryPM
15
16
17
18
```

At the RMM shelf

5

> **DANGER**
> **Static discharge may cause damage to circuit packs**
> Put on a wrist strap and connect it to the frame of the RMM before removing any cards. This protects the RMM against service degradation caused by static electricity.

Put on a wrist strap.

6 Remove the NT0X10 card as shown in the following figures.

a Locate the card to be removed on the appropriate shelf.

NT0X10
in an RSC-S (PCM-30) Model A RMM (continued)

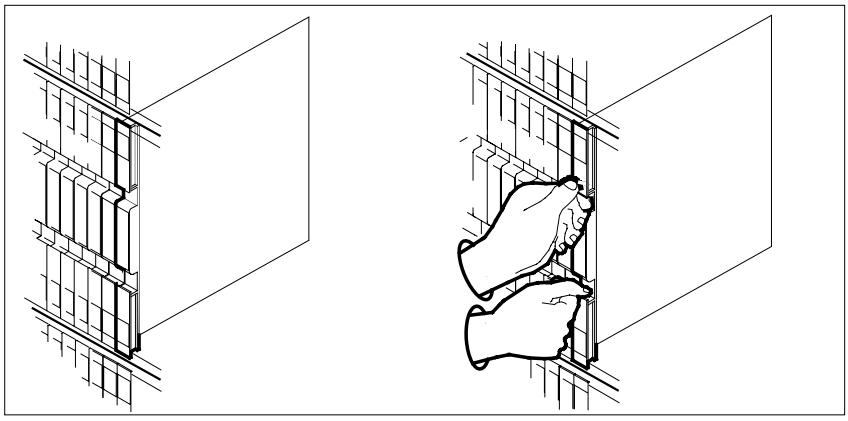

b Open the locking levers on the card to be replaced and gently pull the card toward you until it clears the shelf.

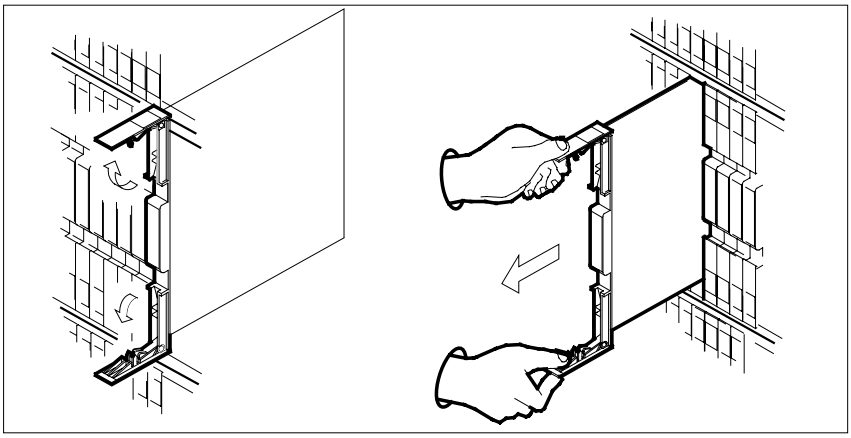

c Ensure the replacement card has the same PEC, including suffix, as the card you just removed.

d Set the switch settings on the card to match those of the card you are replacing.

7 Open the locking levers on the replacement card.

a Align the card with the slots in the shelf.

b Gently slide the card into the shelf.

NT0X10
in an RSC-S (PCM-30) Model A RMM (continued)

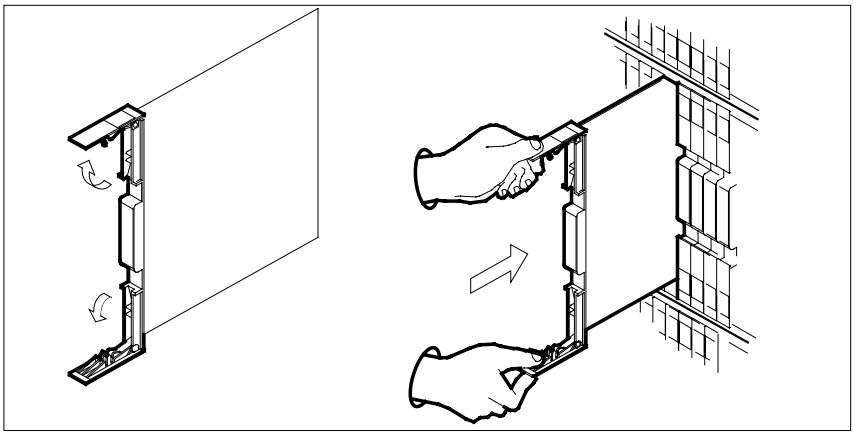

8

DANGER
Equipment damage
Take these precautions when removing or inserting a card:

1. Do not apply direct pressure to the components.
2. Do not force the card into its slot.

Seat and lock the card.

a Using your fingers or thumbs, push on the upper and lower edges of the faceplate to ensure the card is fully seated in the shelf.

b Close the locking levers.

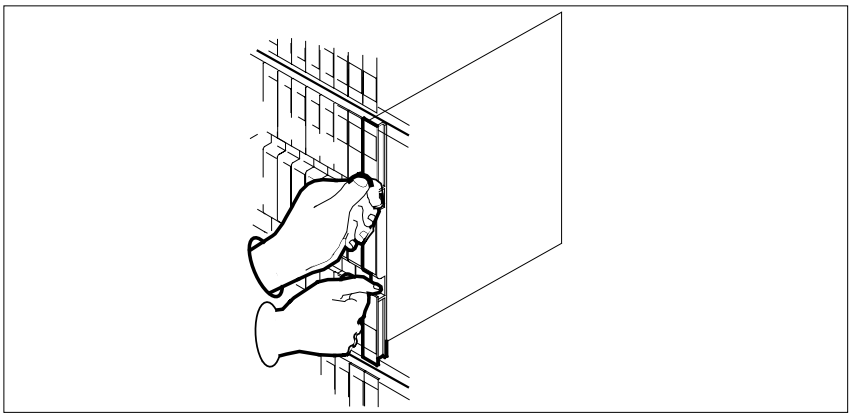

NT0X10 in an RSC-S (PCM-30) Model A RMM (end)

9 Use the following information to determine what step to go to next in this procedure.

If you entered this procedure from	Do
alarm clearing procedures	step 12
other	step 10

10 Send any faulty cards for repair according to local procedure.

11 Record the date the card was replaced, the serial number of the card, and the symptoms prompted by replacement of the card. Go to step 14.

12 Return to the procedure that directed you to this procedure. At the point where a faulty card list was produced, identify the next faulty card on the list and go to the appropriate card replacement procedure for that card in this manual.

13 Obtain further assistance in replacing this card by contacting the personnel responsible for higher level of support.

14 You have successfully completed this procedure. Return to the maintenance procedure that directed you to this card replacement procedure and continue as directed.

NT0X10 in an RSC-S (PCM-30) Model B RMM

Application

Use this procedure to replace an NT0X10 card in an RSC-S RMM.

PEC	Suffixes	Name
NT0X10	AA	Miscellaneous Scan Card (MSC)

Common procedures

None

Action

The following flowchart is only a summary of the procedure. To replace the card, use the instructions in the procedure that follows the flowchart.

Summary of card replacement procedure for an NT0X10 card in RSC-S RMM

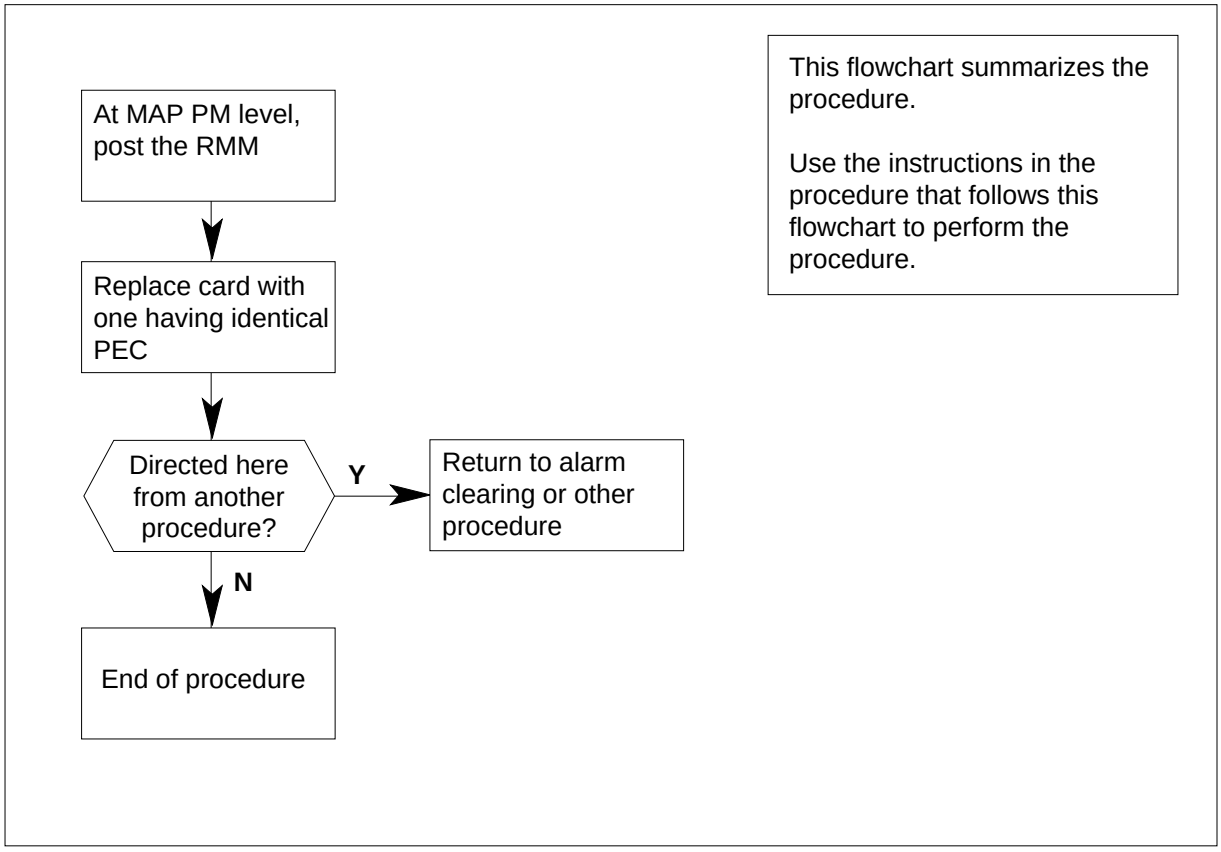

NT0X10 in an RSC-S (PCM-30) Model B RMM (continued)

Replacing an NT0X10 card in RSC-S RMM

1 Proceed only if you have been directed to this card replacement procedure from a step in a maintenance procedure, are using the procedure for verifying or accepting cards, or have been directed to this procedure by your maintenance support group.

2 Obtain a replacement card. Ensure that the replacement card has the same product equipment code (PEC), including suffix, as the card to be removed.

At the MAP terminal

3 Access the PM level and post the RMM by typing

>MAPCI;MTC;PM;POST RMM rmm_no

and pressing the Enter key.

where

rmm_no
is the number of the RMM from which the card is to be removed

Example of a MAP display:

```
CM     MS     IOD     Net    PM    CCS    LNS    Trks     Ext   Appl
 .      .       .       .     .     .      .      .          .     .
RMM              SysB     ManB     OffL     CBsy     ISTb      InSv
 0 Quit    PM       0        0        0        0        0       130
 2 Post_   RMM      0        0        0        0        0         0
 3
 4         RMM  5  INSV
 5 Trnsl
 6 Tst
 7 Bsy
 8 RTS
 9 OffL
10 LoadPM
11 Disp_
12 Next
13
14 QueryPM
15
16
17
18
```

4 Busy the RMM by typing

>BSY

and pressing the Enter key.

Example of a MAP display:

NT0X10
in an RSC-S (PCM-30) Model B RMM (continued)

```
CM     MS     IOD     Net    PM    CCS    LNS    Trks     Ext   Appl
 .      .       .       .   1ManB   .      .      .       .      .     .
RMM              SysB     ManB     OffL     CBsy     ISTb      InSv
 0 Quit    PM       4        0       10        0        0       130
 2 Post_   RMM      0        1        0        0        0         0
 3
 4         RMM  5  INSV
 5 Trnsl
 6 Tst
 7 Bsy
 8 RTS
 9 OffL
10 LoadPM
11 Disp_
12 Next
13
14 QueryPM
15
16
17
18
```

At the RMM shelf

5

DANGER
Static discharge may cause damage to circuit packs
Put on a wrist strap and connect it to the frame of the RMM before removing any cards. This protects the RMM against service degradation caused by static electricity.

Put on a wrist strap.

6 Remove the NT0X10 card as shown in the following figures.

a Locate the card to be removed on the appropriate shelf.

NT0X10
in an RSC-S (PCM-30) Model B RMM (continued)

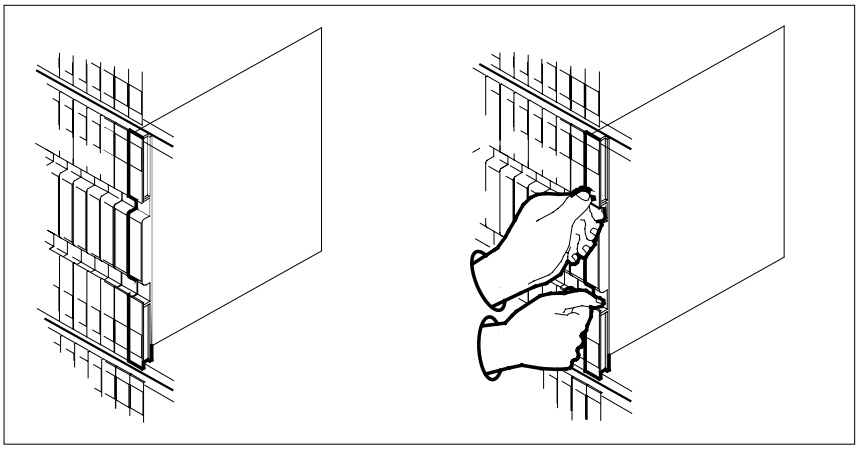

b Open the locking levers on the card to be replaced and gently pull the card toward you until it clears the shelf.

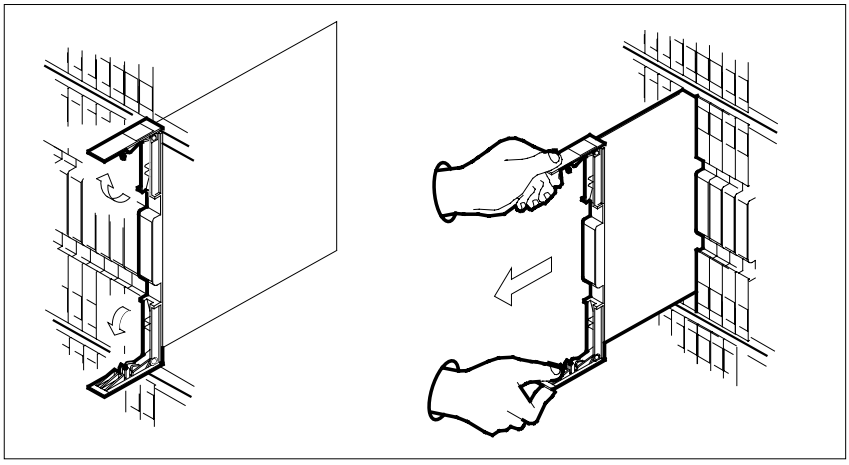

c Ensure the replacement card has the same PEC, including suffix, as the card you just removed.

d Set the switch settings on the card to match those of the card you are replacing.

7 Open the locking levers on the replacement card.

a Align the card with the slots in the shelf.

b Gently slide the card into the shelf.

NT0X10
in an RSC-S (PCM-30) Model B RMM (continued)

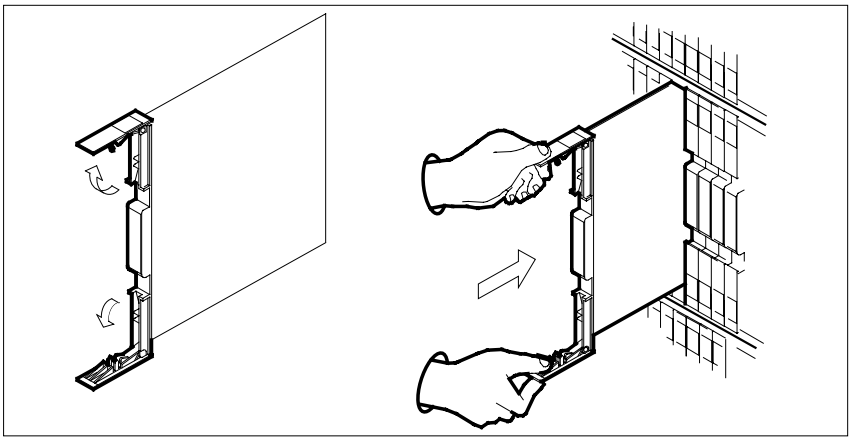

8

DANGER
Equipment damage
Take these precautions when removing or inserting a card:

1. Do not apply direct pressure to the components.
2. Do not force the card into its slot.

Seat and lock the card.

a Using your fingers or thumbs, push on the upper and lower edges of the faceplate to ensure the card is fully seated in the shelf.

b Close the locking levers.

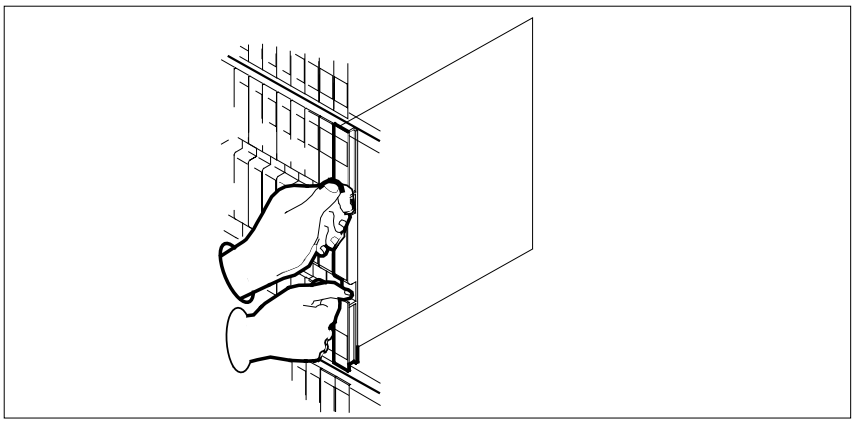

NT0X10
in an RSC-S (PCM-30) Model B RMM (end)

9 Use the following information to determine what step to go to next in this procedure.

If you entered this procedure from	Do
alarm clearing procedures	step 12
other	step 10

10 Send any faulty cards for repair according to local procedure.

11 Record the date the card was replaced, the serial number of the card, and the symptoms prompted by replacement of the card. Go to step 14.

12 Return to the procedure that directed you to this procedure. At the point where a faulty card list was produced, identify the next faulty card on the list and go to the appropriate card replacement procedure for that card in this manual.

13 Obtain further assistance in replacing this card by contacting the personnel responsible for higher level of support.

14 You have successfully completed this procedure. Return to the maintenance procedure that directed you to this card replacement procedure and continue as directed.

NT0X91 in an IOPAC FSP

Application

Use this procedure to replace the following card in an IOPAC FSP.

PEC	Suffixes	Name
NT0X91	AA	FSP converter drive and alarm circuit pack
	AE	FSP converter drive and protection circuit pack

Common procedures

None

Action

This procedure contains a summary flowchart and a list of steps. Use the flowchart to review the procedure. Follow the steps to perform the procedure.

NT0X91
in an IOPAC FSP (continued)

Summary of replacing an NT0X91 card in an FSP

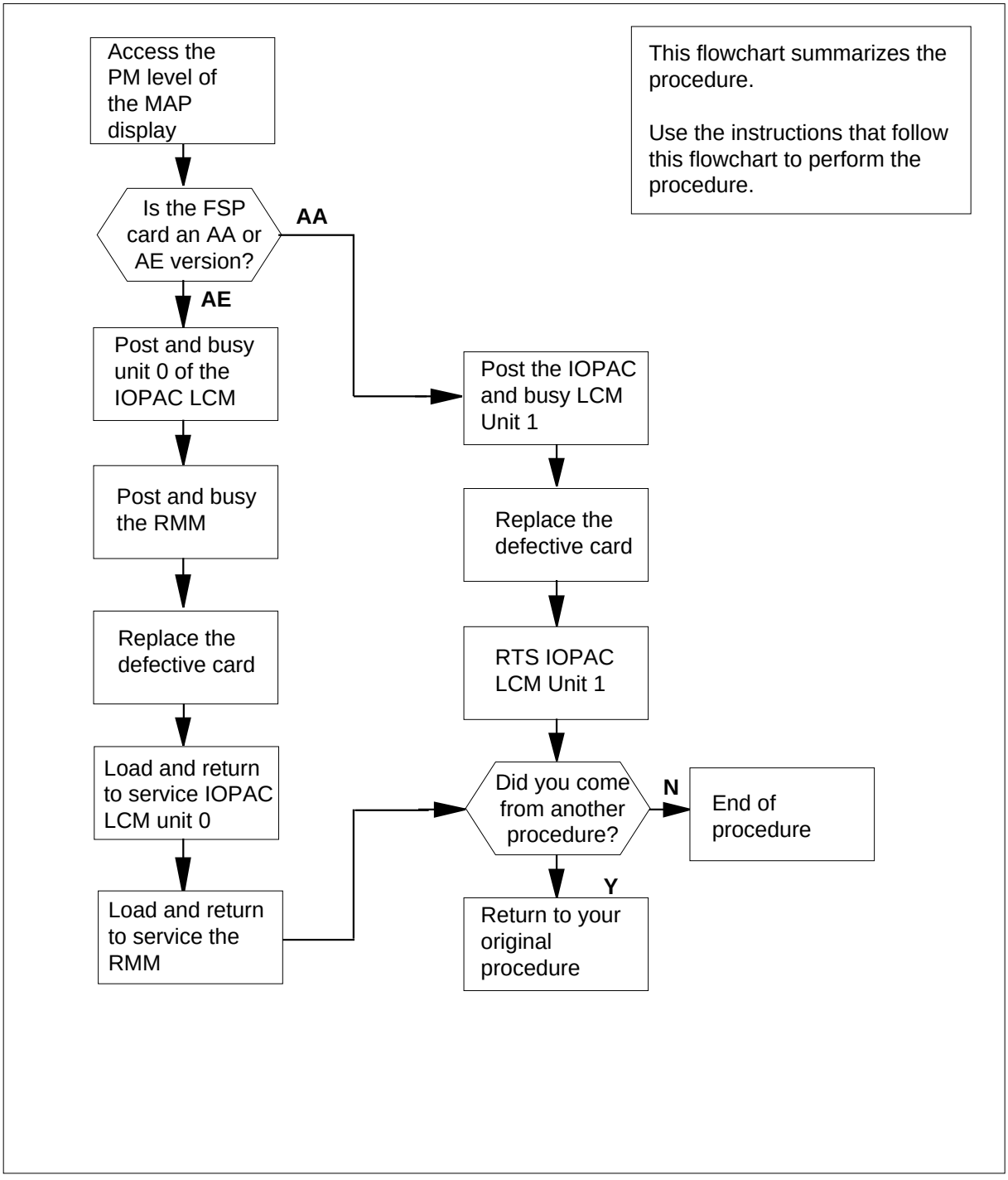

NT0X91
in an IOPAC FSP (continued)

Replacing an NT0X91 in an FSP

At your current location

1 Obtain a replacement card. Make sure the replacement card has the same product engineering code (PEC), including suffix, as the card removed.

2 Use the following figure and table to identify the slot that contains the alarm and control card to replace.

FSP Alarm and Control cards

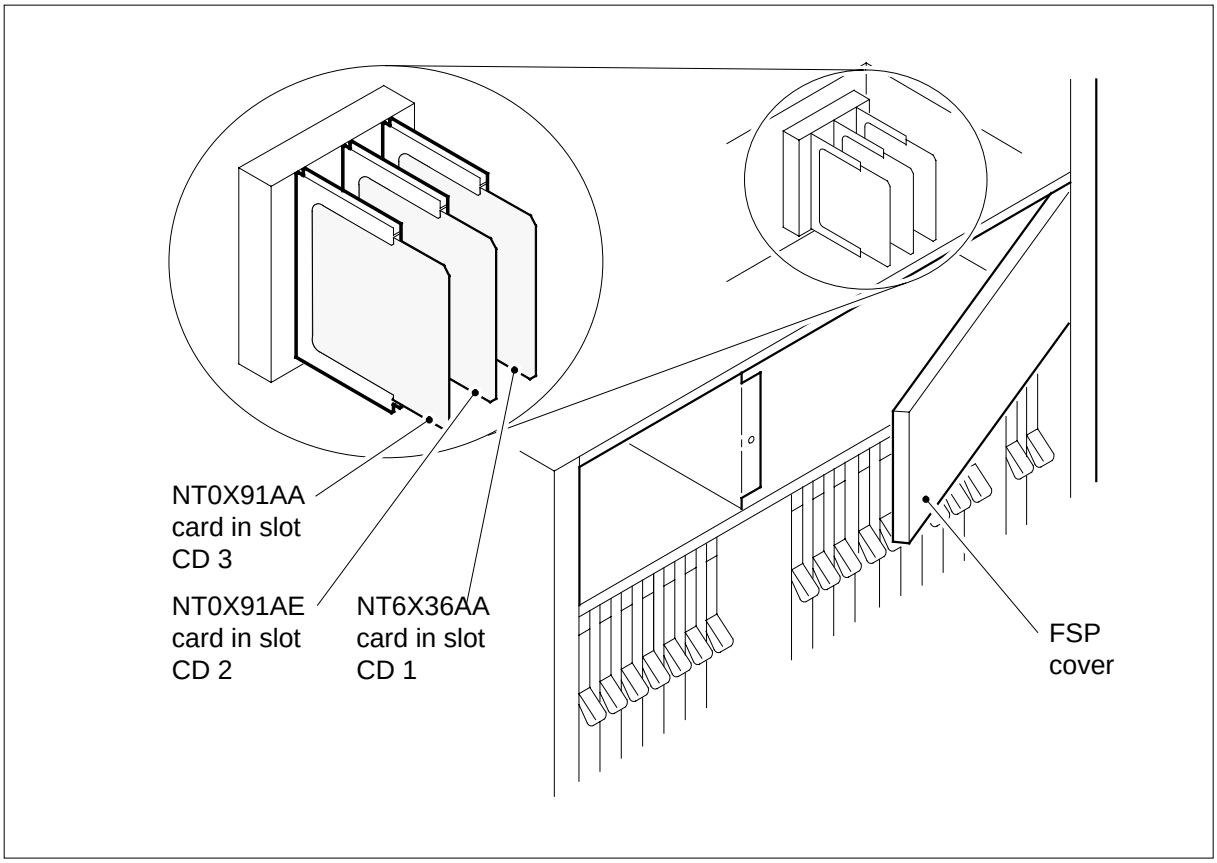

Note: Refer to the above figure for FSP card slot locations.

IfAlarm and control card	Doslot
NT0X91AA	slot CD3
NT0X91AE	slot CD2

NT0X91
in an IOPAC FSP (continued)

If Alarm and control card	Do slot
NT6X36AA	slot CD1

3 The following table identifies which shelves, converters, and circuit breakers (CB) associated with the alarm and control card you want to replace.

Alarm and control card	Shelf power Converter	shelf number	circuit breaker
NT0X91AA	NT2X70 in slot 22	38	CB4
NT0X91AE	NT2X70 in slot 25	38	CB1
NT0X91AE	NT2X09 and NT2X06	55	CB5
Note: The CBs are located on the FSP, shelf position 72.			

4 Record the numbers of the shelves and CBs associated with the alarm and control card.

5 Record the numbers of the following modules associated with the alarm and control card to replace:

- the remote line concentrating module (RLCM)
- the remote maintenance module (RMM)
- the emergency stand alone (ESA) module

At the MAP display

6

CAUTION
Loss of service
This procedure contains directions to busy one unit of a peripheral module (PM) in a frame. If you busy a unit of a PM, you affect redundancy. Replace alarm and control cards only during periods of low traffic.

To access the PM level of the MAP display, type

```
>MAPCI;MTC;PM
```

and press the Enter key.

7 To post the IOPAC that the alarm and control card control as recorded in step 5, type

```
>POST LCM  site_name frame_no lcm_no
```

and press the Enter key.

where

site_name
is the name of the site where the LCM is located

frame_no
is the number of the frame where the LCM is located

lcm_no
is the number of the LCM unit associated with the defective card

If Converter suffix	Do
is AA	step 8
is AE	step 26

8 To busy LCM unit 1, type

```
>BSY  UNIT 1
```

and press the Enter key.

At the IOPAC cabinet

9 Put on a wrist strap.

10 Set CB4 as recorded in step 4 to the OFF position.

11 Unscrew the slotted nut located on the left-hand side of the FSP.

12

DANGER
Risk of electrocution
Some terminals in the frame supervisory panel (FSP) have an electrical potential of -48 V dc. Remove all jewelry before you replace a card in the FSP. Do not touch any terminals in the FSP.

Open the FSP panel.

13 Remove the NT0X91AA card from the slot identified in step 2.

14 Insert the replacement card.

15 Close the FSP panel.

16 Tighten the slotted nut on the FSP.

17 Set CB4 as recorded in step 4 to the ON position.

18 Proceed as follows to reset the converters in the host interface equipment shelf (HIE).

NT0X91
in an IOPAC FSP (continued)

19 Power up the NT2X70 in slot 22 as follows:

If NT2X70 suffix	Do
is AE	step 20
is AA, AB, AC, or AD	step 21

20 Toggle the ON/OFF/RESET switch on the power converter faceplate, identified in step 3, to the RESET position. Hold the switch while you set CB1, on the FSP, to the ON position. Both the converter FAIL LED and FRAME FAIL lamp on the FSP go OFF. Release the ON/OFF/RESET switch. Go to step 22.

21 Press the RESET button on the power converter faceplate while you set CB1 on the FSP to the ON position. Step 3 identifies CB1. The converter FAIL LED goes OFF. Release the RESET button.

22 Remove the wrist strap.

23 Determine if a Converter Fail LED is lit.

If Converter Fail LED	Do
is lit	step 75
is not lit	step 24

At the MAP display

24 To return to service LCM unit 1, type

```
>RTS  UNIT 1
```

and press the Enter key.

25 The reason you perform this procedure determines the next action.

If a maintenance procedure	Do
directed you to this procedure	step 74
did not direct you to this procedure	step 76

26 To busy LCM unit 0, type

```
>BSY UNIT 0
```

and press the Enter key.

27 To post the RMM that the alarm and control card control, as recorded in step 5, type

```
>POST RMM rmm_no
```

and press the Enter key.

where

NT0X91
in an IOPAC FSP (continued)

rmm_no
is the number of the RMM to be posted, as recorded in step 5

28 To busy the RMM, type

>BSY

and press the Enter key.

At the RLCE frame

29 Put on a wrist strap.

30 Set CB1 as recorded in step 4 to OFF.

31 Set CB5 as recorded in step 4 to OFF.

32 Unscrew the slotted nut located on the left-hand side of the FSP.

33

DANGER
Risk of electrocution
Some terminals in the frame supervisory panel (FSP) have an electrical potential of -48 V dc. Remove all jewelry before you replace a card in the FSP. Do not touch any terminals in the FSP.

Open the FSP panel.

34 Remove the NT0X91AE card from the slot identified in step 2.

35 Insert the replacement card.

36 Close the FSP panel.

37 Tighten the slotted nut on the FSP.

38 Proceed as follows to reset the converters in the host interface equipment shelf (HIE) and the RMM.

39 Power up the NT2X70 in slot 25 as follows:

If NT2X70 suffix	Do
is AE	step 40
is AA, AB, AC, or AD	step 41

40 Toggle the ON/OFF/RESET switch on the power converter faceplate, identified in step 3, to the RESET position. Hold the switch while you set CB1, on the FSP, to the ON position. Both the converter FAIL LED and FRAME FAIL lamp on the FSP go OFF. Release the ON/OFF/RESET switch Go to step 42.

41 Press the RESET button on the power converter faceplate while you set CB1 on the FSP to the ON position. Step 3 identifies CB1. The converter FAIL LED goes OFF. Release the RESET button.

NT0X91
in an IOPAC FSP (continued)

42 Set the power switch on the NT2X09 and NT2X06 power converters on the RMM shelf to the ON position.

43 Press the RESET button on the NT2X09 power converter while you set CB5 on the FSP to the ON position. Both the converter FAIL LED and FRAME FAIL lamp on the FSP go off.

44 Remove the wrist strap.

45 Determine if a Converter Fail LED is lit.

If Converter Fail LED	Do
is lit	step 75
is not lit	step 46

At the MAP display

46 To post the LCM that the alarm and control card you replaced control, type

`>POST LCM site_name frame_no lcm_no`

and press the Enter key.

where

site_name
is the name of the site where the LCM is located

frame_no
is the number of the frame where the LCM is located

lcm_no
is the number of the LCM unit with the new FSP card

47 To load the LCM unit, type

`>LOADPM UNIT 0 CC`

and press the Enter key.

If	Do
message `loadfile not found in directory` is not received	step 48
load passed	step 69
load failed	step 75

48 To query the LCM for the name of the current PM load, type

`>QUERYPM`

and press the Enter key.

Example of a MAP response:

NT0X91
in an IOPAC FSP (continued)

```
PM Type: LCM  Int. No.: 11  Status index: 6  Node_No: 111
Memory Size – Unit 0: 256K , Unit 1: 256K
Loadnames:LCMINV –XLCM06AX, Unit0:XLCM06AX, Unit1:XLCM06AX
LCM REM1 00 0 is included in the list of LCM types
 scheduled for a REX test.
Last REX test was WED. 1995/04/19 at 02:09:33; PASSED.
Node Status: {OK, FALSE}
Unit 0 Status:{OK, FALSE}
Unit 1 Status:{OK, FALSE}
 Site Flr RPos  Bay_id   Shf  Description    Slot   EqPEC
 REM1  01  A02  RLCE 00   04  LCM  14 0             6X04AA
Services : NEUTRAL
```

Note: Dashed boxes indicate a valid loadname.

49 Determine the type of device where the PM load files are located.

If load files	Do
are located on tape	step 50
are located on IOC disk	step 56
are located on SLM disk	step 61

50 Locate the tape that contains the PM load files.

At the IOE frame

51 Mount the tape on a magnetic tape drive.

At the MAP display

52 To download the tape, type

`>MOUNT tape_no`

and press the Enter key.

where

tape_no
is the number of the tape drive that contains the PM load files

53 To list the contents of the tape in your user directory, type

`>LIST T tape_no`

and press the Enter key.

where

tape_no
is the number of the tape drive that contains the PM load files.

NT0X91
in an IOPAC FSP (continued)

54 To demount the tape drive, type

`>DEMOUNT T tape_no`

and press the Enter key.

where

tape_no
is the number of the tape drive that contains the PM load files

55 Go to step 68.

56 From office records, determine and note the number of the input/output controller (IOC) disk. Note the name of the volume that contains the PM load files.

57 To access the IOC disk utility level of the MAP, type

`>DSKUT`

and press the Enter key.

58 To list the IOC file names to your user directory, type

`>LISTVOL volume_name ALL`

and press the Enter key.

where

volume_name
is the name of the volume that contains the PM load files, obtained in step 56.

59 To leave the disk utility, type

`>QUIT`

and press the Enter key.

60 Go to step 68.

61 From office records, determine and note the number of the system load module (SLM) disk. Note the name of the volume that contains the PM load files.

62 To access the SLM disk utility level of the MAP, type

`>DISKUT`

and press the Enter key.

63 To list the SLM disk volume names, type

`>LV CM`

and press the Enter key.

64 To list the SLM file names to your user directory, type

`>LF volume_name`

and press the Enter key.

where

volume_name
is the name of the volume that contains the PM load files,obtained in step 61.

65 To leave the disk utility, type

```
>QUIT
```

and press the Enter key.

66 To access the PM level of the MAP display, type

```
>MAPCI;MTC;PM
```

and press the Enter key.

67 To post the LCM that the alarm and control card you replaced control, type

```
>POST LCM  site_name frame_no lcm_no
```

and press the Enter key.

where

site_name
is the name of the site where the LCM is located

frame_no
is the number of the frame where the LCM is located

lcm_no
is the number of the LCM unit with the new FSP card

68 To load LCM unit 0, type

```
>LOADPM  UNIT 0 CC
```

and press the Enter key.

69 To return LCM unit 0 to service, type

```
>RTS UNIT 0
```

and press the Enter key.

If unit 0	Do
RTS passes	step 70
RTS fails	step 75

70 To post the RMM that the alarm and control card you replaced control, type

```
>POST RMM rmm_no
```

and press the Enter key.

where

rmm_no
is the number of the RMM to be posted, as recorded in step 5

71 To load the RMM, type

```
>LOADPM
```

NT0X91 in an IOPAC FSP (end)

and press the Enter key.

72 To return the RMM to service, type

>RTS

and press the Enter key.

If the rmm	Do
RTS passes	step 73
RTS fails	step 75

73 The reason you perform this procedure determines the next action.

If a maintenance procedure	Do
directs you to this procedure	step 74
does not direct you to this procedure	step 76

74 Return to the maintenance procedure that directed you to this procedure and continue as directed.

75 For additional help, contact the next level of support.

76 This procedure is complete.

NT0X91 in an RLCM

Application

Use this procedure to replace the following card in an RLCE FSP.

PEC	Suffixes	Name
NT0X91	AA, AE	FSP drive and alarm circuit pack

Common procedures

None.

Action

The following flowchart is only a summary of the procedure. To replace the card, use the instructions in the step-action procedure that follows the flowchart.

NT0X91
in an RLCM (continued)

Summary of card replacement procedure for an NT0X91 card in an RLCE

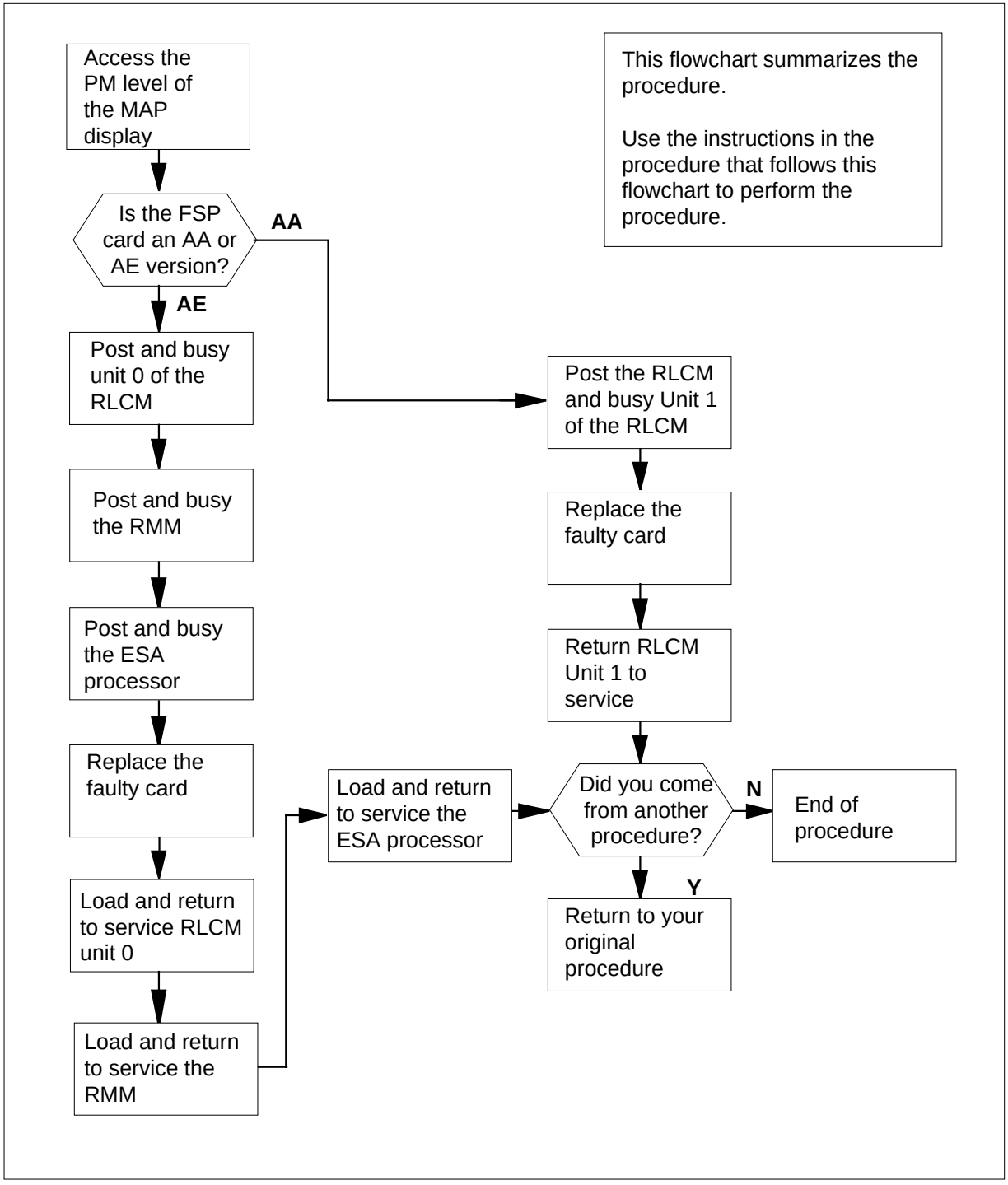

NT0X91 in an RLCM (continued)

Replacing an NT0X91 card in an RLCE

At your current location

1 Obtain a replacement card. Ensure that the replacement card has the same product engineering code (PEC), including suffix, as the card being removed.

2

FSP Alarm and Control cards

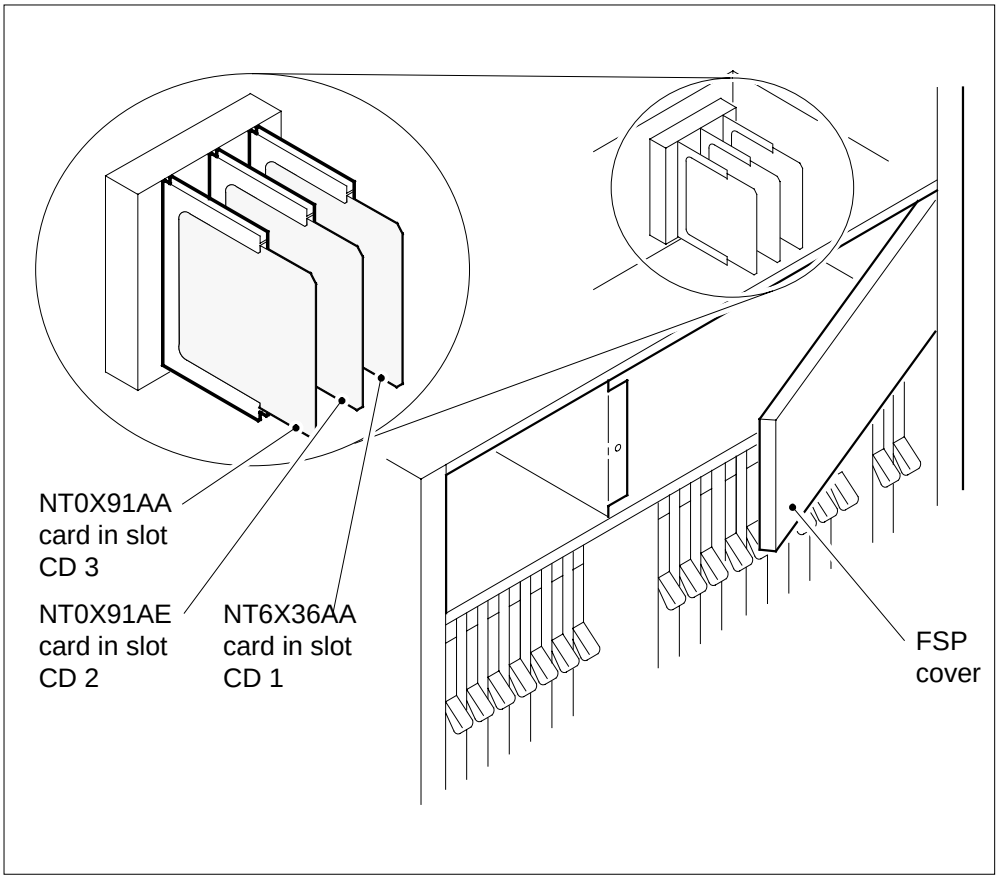

Use the following table to identify the slot containing the alarm and control card to be replaced.

If Alarm and control card	Do slot
NT0X91AA	slot CD3
NT0X91AE	slot CD2
NT6X36AA	slot CD1

Note: Refer to the following (above figure) for FSP card slot locations.

NT0X91
in an RLCM (continued)

3 Use the following table to identify which shelves, converters, and circuit breakers (CB) are associated with the alarm and control card you want to replace.

Alarm and Shelf control card	power Converter	shelf number	circuit breaker
NT0X91AA	NT2X70 in slot 22	38	CB4
NT0X91AE	NT2X70 in slot 25	38	CB1
NT0X91AE	NT2X09 and NT2X06	55	CB5
Note: The CBs are located on the FSP, shelf position 72.			

4 Record the numbers of the shelves and CBs associated with the alarm and control card.

5 Record the numbers of each remote line concentrating module (RLCM), remote maintenance module (RMM) and emergency stand alone (ESA) module associated with the alarm and control card to be replaced.

At the MAP display

6

CAUTION
Loss of service
This procedure contains directions to busy one unit of a peripheral module (PM) in a frame. Since busying a unit of a PM affects redundancy, replace alarm and control cards only during periods of low traffic.

Access the PM level of the MAP display by typing

```
>MAPCI;MTC;PM
```

and pressing the Enter key.

7 Post the RLCM that is controlled by the alarm and control card as recorded in step 5 by typing

```
>POST LCM  site_name frame_no lcm_no
```

and pressing the Enter key.

where

site_name
is the name of the site where the LCM is located

NT0X91
in an RLCM (continued)

frame_no
is the number of the frame where the LCM is located

lcm_no
is the number of the LCM unit associated with the faulty card

If Converter suffix is	Do
AA	step 8
AE	step 26

8 Busy LCM unit 1 by typing

```
>BSY  UNIT 1
```

and pressing the Enter key.

At the RLCE frame

9 Put on a wrist strap.

10 Set CB4 as recorded in step 4 to the OFF position.

11 Unscrew the slotted nut located on the left-hand side of the FSP.

12

DANGER
Risk of electrocution
Some of the terminals inside the frame supervisory panel (FSP) have an electrical potential of -48 V dc. Remove all jewelry before replacing a card in the FSP. Do not touch any terminals in the FSP.

Open the FSP panel.

13 Remove the NT0X91AA card from the slot identified in step 2.

14 Insert the replacement card.

15 Close the FSP panel.

16 Tighten the slotted nut on the FSP.

17 Set CB4 as recorded in step 4 to the ON position.

18 Proceed as follows to reset the converters in the host interface equipment shelf (HIE).

19 Power up the NT2X70 in slot 22 as follows:

If NT2X70 suffix is	Do
AE	step 20
AA, AB, AC, or AD	step 21

NT0X91
in an RLCM (continued)

20 Toggle the ON/OFF/RESET switch on the power converter faceplate, identified in step 3, to the RESET position and hold while setting CB1, on the FSP, to the ON position. Both the converter FAIL LED and FRAME FAIL lamp on the FSP will go OFF, release the ON/OFF/RESET switch, go to step 22.

21 Press the RESET button on the power converter faceplate while setting CB1, identified in step 3, on the FSP to the ON position. The converter FAIL LED will go OFF, release the RESET button.

22 Remove the wrist strap.

23 Determine if a Converter Fail LED is lit.

If Converter Fail LED is	Do
lit	step 80
not lit	step 24

At the MAP display

24 Return to service LCM unit 1 by typing

```
>RTS  UNIT 1
```

and pressing the Enter key.

25 The next action depends on your reason for performing this procedure

If you were	Do
directed to this procedure from a maintenance procedure	step 79
not directed to this procedure from a maintenance procedure	step 81

26 Busy LCM unit 0 by typing

```
>BSY UNIT 0
```

and pressing the Enter key.

27 Post the RMM that is controlled by the alarm and control card as recorded in step 5 by typing

```
>POST RMM rmm_no
```

and pressing the Enter key.

where

rmm_no
is the number of the RMM to be posted, as recorded in step 5

28 Busy the RMM by typing

```
>BSY
```

and pressing the Enter key.

NT0X91 in an RLCM (continued)

29 Post the ESA processor that is controlled by the alarm and control card as recorded in step 5 by typing

>POST ESA esa_no

and pressing the Enter key.

where

esa_no
is the number of the ESA processor to be posted, as recorded in step 5

30 Busy the ESA processor by typing

>BSY

and pressing the Enter key.

At the RLCE frame

31 Put on a wrist strap.

32 Set CB1 as recorded in step 4 to OFF.

33 Set CB5 as recorded in step 4 to OFF.

34 Unscrew the slotted nut located on the left-hand side of the FSP.

35

DANGER
Risk of electrocution
Some of the terminals inside the frame supervisory panel (FSP) have an electrical potential of -48 V dc. Remove all jewelry before replacing a card in the FSP. Do not touch any terminals in the FSP.

Open the FSP panel.

36 Remove the NT0X91AE card from the slot identified in step 2.

37 Insert the replacement card.

38 Close the FSP panel.

39 Tighten the slotted nut on the FSP.

40 Proceed as follows to reset the converters in the host interface equipment shelf (HIE), and the RMM.

41 Power up the NT2X70 in slot 25 as follows:

If NT2X70 suffix is	Do
AE	step 42
AA, AB, AC, or AD	step 43

NT0X91
in an RLCM (continued)

42 Toggle the ON/OFF/RESET switch on the power converter faceplate, identified in step 3, to the RESET position and hold while setting CB1, on the FSP, to the ON position. Both the converter FAIL LED and FRAME FAIL lamp on the FSP will go OFF, release the ON/OFF/RESET switch, go to step 44.

43 Press the RESET button on the power converter faceplate while setting CB1, identified in step 3, on the FSP to the ON position. The converter FAIL LED will go OFF, release the RESET button.

44 Set the power switch on the NT2X09 and NT2X06 power converters on the RMM shelf to the ON position.

45 Press the RESET button on the NT2X09 power converter while setting CB5, on the FSP to the ON position. Both the converter FAIL LED and FRAME FAIL lamp on the FSP will go off.

46 Remove the wrist strap.

47 Determine if a Converter Fail LED is lit.

If Converter Fail LED is	Do
lit	step 80
not lit	step 48

At the MAP display

48 Post the LCM that is controlled by the alarm and control card you have just replaced by typing

```
>POST LCM  site_name frame_no lcm_no
```

and pressing the Enter key.

where

site_name
is the name of the site where the LCM is located

frame_no
is the number of the frame where the LCM is located

lcm_no
is the number of the LCM unit with the new FSP card

49 Load the LCM unit by typing

```
>LOADPM UNIT 0 CC
```

and pressing the Enter key.

If	Do
message `loadfile not found in directory` is not received	step 50
load passed	step 71

If	Do
load failed	step 80

50 Query the LCM for the name of the current PM load by typing

>QUERYPM

and pressing the Enter key.

Example of a MAP response:

```
PM Type: LCM  Int. No.: 11  Status index: 6  Node_No: 111
Memory Size – Unit 0: 256K , Unit 1: 256K
Loadnames:LCMINV –X[LCM06AX,] Unit0:X[LCM06AX,] Unit1:X[LCM06AX ]
LCM REM1 00 0 is included in the list of LCM types
 scheduled for a REX test.
Last REX test was WED. 1995/04/19 at 02:09:33; PASSED.
Node Status: {OK, FALSE}
Unit 0 Status:{OK, FALSE}
Unit 1 Status:{OK, FALSE}
 Site Flr RPos  Bay_id   Shf  Description    Slot   EqPEC
 REM1  01  A02  RLCE 00   04  LCM  14 0             6X04AA
Services : NEUTRAL
```

Note: Dashed boxes indicate a valid loadname.

51 Determine the type of device where the PM load files are located.

If load files are located on	Do
tape	step 52
IOC disk	step 58
SLM disk	step 63

52 Locate the tape that contains the PM load files.

At the IOE frame

53 Mount the tape on a magnetic tape drive.

At the MAP display

54 Download the tape by typing

>MOUNT tape_no

and pressing the Enter key.

where

tape_no
is the number of the tape drive containing the PM load files

NT0X91
in an RLCM (continued)

55 List the contents of the tape in your user directory by typing

`>LIST T tape_no`

and pressing the Enter key.

where

tape_no
is the number of the tape drive containing the PM load files.

56 Demount the tape drive by typing

`>DEMOUNT T tape_no`

and pressing the Enter key.

where

tape_no
is the number of the tape drive containing the PM load files

57 Go to step 70.

58 From office records, determine and note the number of the input/output controller (IOC) disk and the name of the volume that contains the PM load files.

59 Access the IOC disk utility level of the MAP by typing

`>DSKUT`

and pressing the Enter key.

60 List the IOC file names into your user directory by typing

`>LISTVOL volume_name ALL`

and pressing the Enter key.

where

volume_name
is the name of the volume that contains the PM load files, obtained in step 58.

61 Leave the disk utility by typing

`>QUIT`

and pressing the Enter key.

62 Go to step 70.

63 From office records, determine and note the number of the system load module (SLM) disk and the name of the volume that contains the PM load files.

64 Access the SLM disk utility level of the MAP by typing

`>DISKUT`

and pressing the Enter key.

65 List the SLM disk volume names by typing

`>LV CM`

and pressing the Enter key.

66 List the SLM file names into your user directory by typing

```
>LF volume_name
```

and pressing the Enter key.

where

volume_name
is the name of the volume that contains the PM load files,obtained in step 63.

67 Leave the disk utility by typing

```
>QUIT
```

and pressing the Enter key.

68 Access the PM level of the MAP display by typing

```
>MAPCI;MTC;PM
```

and pressing the Enter key.

69 Post the LCM that is controlled by the alarm and control card you have just replaced by typing

```
>POST LCM  site_name frame_no lcm_no
```

and pressing the Enter key.

where

site_name
is the name of the site where the LCM is located

frame_no
is the number of the frame where the LCM is located

lcm_no
is the number of the LCM unit with the new FSP card

70 Load LCM unit 0 by typing

```
>LOADPM  UNIT 0 CC
```

and pressing the Enter key.

71 Return LCM unit 0 to service by typing

```
>RTS UNIT 0
```

and pressing the Enter key.

If unit 0	Do
RTS passed	step 72
RTS failed	step 80

72 Post the RMM that is controlled by the alarm and control card you have just replaced by typing

```
>POST RMM rmm_no
```

NT0X91
in an RLCM (continued)

and pressing the Enter key.

where

rmm_no
is the number of the RMM to be posted, as recorded in step 5

73 Load the RMM by typing

>LOADPM

and pressing the Enter key.

74 Return the RMM to service by typing

>RTS

and pressing the Enter key.

If the rmm	Do
RTS passed	step 75
RTS failed	step 80

75 Post the ESA processor that is controlled by the alarm and control card you have just replaced by typing

>POST ESA esa_no

and pressing the Enter key.

where

esa_no
is the number of the ESA processor to be posted, as recorded instep 5

76 Load the ESA processor by typing

>LOADPM

and pressing the Enter key.

77 Return the ESA to service by typing

>RTS

and pressing the Enter key.

If ESA processor	Do
RTS passed	step 78
RTS failed	step 80

78 The next action depends on your reason for performing this procedure

If you were	Do
directed to this procedure from a maintenance procedure	step 79

NT0X91 in an RLCM (end)

If you were	Do
not directed to this procedure from a maintenance procedure	step 81

79 Return to the maintenance procedure that sent you to this procedure and continue as directed.

80 For further assistance, contact the personnel responsible for the next level of support.

81 You have completed this procedure.

NT0X91 in an RSC

Application

Use this procedure to replace the following card in an RCE frame.

PEC	Suffixes	Name
NT0X91	AA	FSP alarm and converter drive circuit pack
NT0X91	AE	FSP drive and protection circuit pack

Common procedures

None

Action

The following flowchart is only a summary of the procedure. To replace the card, use the instructions in the step-action procedure that follows the flowchart.

NT0X91 in an RSC (continued)

Summary of replacing an NT0X91 in RCE

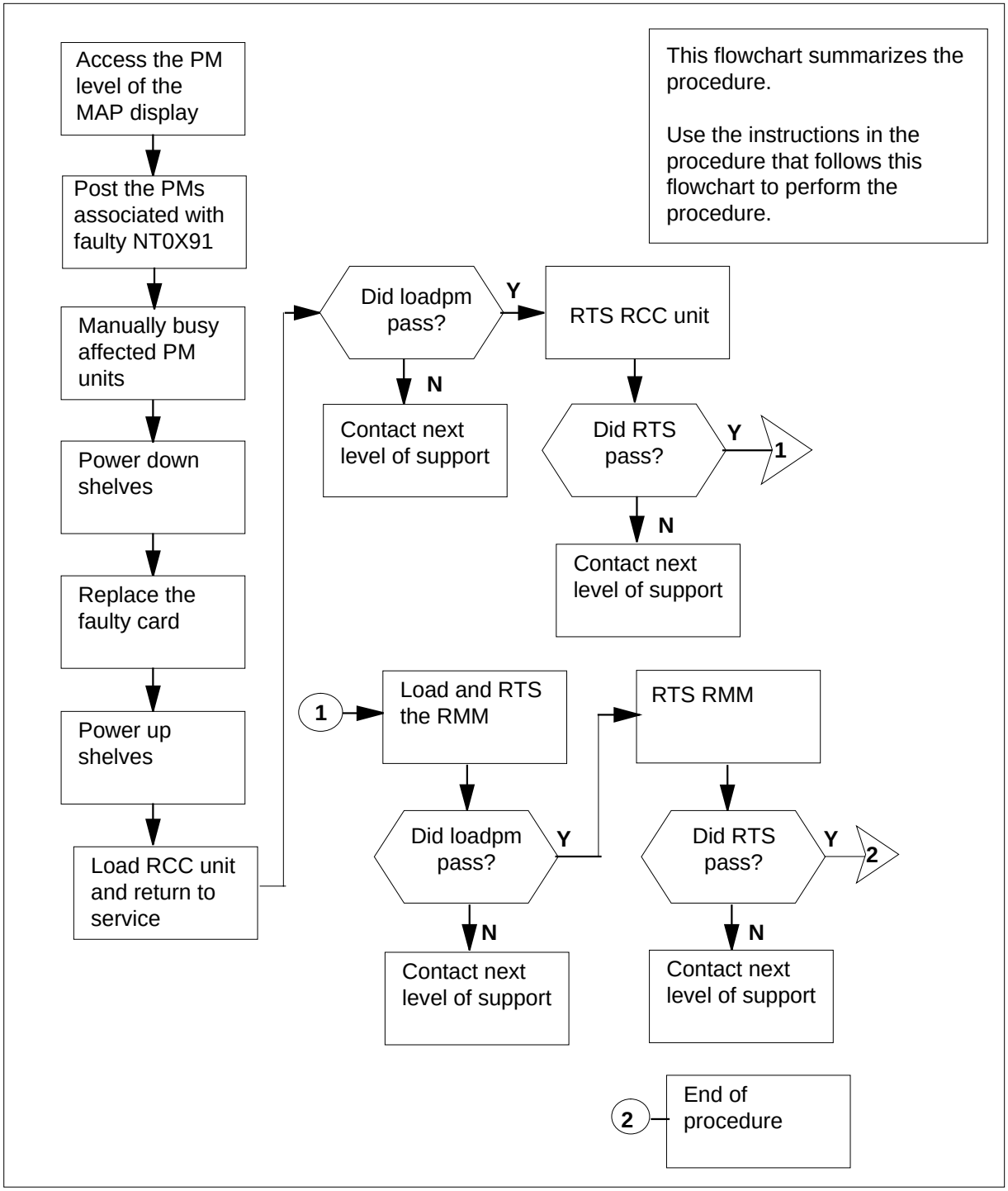

NT0X91 in an RSC (continued)

CAUTION
Loss of service
This procedure includes directions to manually busy one or more peripheral module (PM) units. Since manually busying a PM unit can cause service degradation, perform this procedure only if necessary to restore out of service components. Otherwise. carry out this procedure during periods of low traffic.

Replacing an NT0X91 in an RCE FSP

At your current location

1 Obtain a replacement card. Ensure that the replacement card has the same product engineering code (PEC), including suffix, as the card being removed.

At the RCE frame

2 Record the frame supervisory panel (FSP) slot, frame circuit breakers (CB), shelves, PM location and units, and power converter slots that are associated with the faulty NT0X91 card you are replacing. Use the following table and figure “RCE frame layout for NT0X91 alarm, converter drive and protection circuit distribution" to obtain this information.

Card	FSP Slot	CB	Shelf and PM information	PC slot
NT0X91AA	CD1	CB5	shelf 18 (RCC unit 0)	25
NT0X91AA	CD1	CB4	shelf 51 (RMM 0)	17
NT0X91AE	CD2	CB2	shelf 32 (RCC unit 1)	25
NT0X91AE	CD2	CB1	shelf 65 (RMM 1)	17

NT0X91 in an RSC (continued)

RCE frame layout for NT0X91 alarm, converter drive and protection circuit distribution

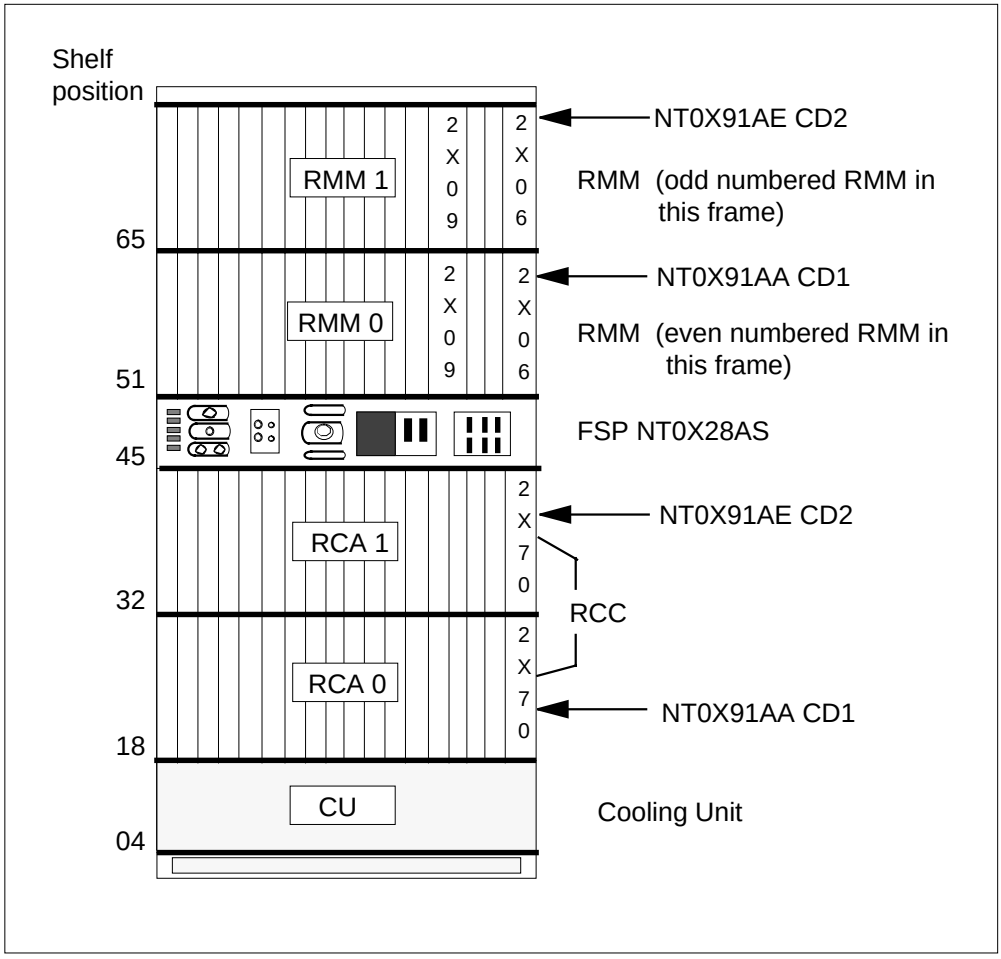

3 Record the PM_type and PM_number of PMs associated with the NT0X91 you are replacing.

At the MAP terminal

4 Access the PM level and post the RCC associated with the faulty NT0X91 card by typing

`>MAPCI;MTC;PM;POST RCC rcc_unit_no`

and pressing the Enter key.

where

rcc_unit_no
is the number of the RCC associated with the faulty NT0X91 card.

Example of a MAP display:

NT0X91
in an RSC (continued)

```
   CM    MS    IOD   Net    PM    CCS    LNS    Trks    Ext    APPL
    .     .      .     .    1RCC    .      .       .       .       .

 RCC              SysB     ManB     OffL     CBsy     ISTb      InSv
 0 Quit     PM     0        0        2        0        2         25
 2 Post_    RCC    0        0        0        0        1          1
 3 ListSet
 4                RCC      0 ISTb  Links_OOS:  CSide  0,  PSide   0
 5 TRNSL_         Unit 0:  Inact SysB
 6 TST_           Unit 1:   Act  InSv
 7 BSY_
 8 RTS_
 9 OffL
10 LoadPM_
11 Disp_
12 Next_
13 SwAct
14 QueryPM
15
16 IRLINK
17 Perform
18
```

5 By observing the MAP display, be sure the card to be removed is on the inactive unit.

If the faulty card is on an	Do
ACTIVE unit	step 6
INACTIVE unit	step 10

6

CAUTION
Service disruption: calls may be dropped!
If you are prompted to confirm a cold SwAct, perform this activity only during a period of low traffic. All calls being handled by this PM, including data calls, will be dropped.

Switch the processing activity to the inactive unit by typing

>SWACT

and pressing the Enter key.

NT0X91 in an RSC (continued)

The system determines the type of SwAct it can perform, a warm SwAct or a cold SwAct, and displays a confirmation prompt for the selected SwAct.

If SwAct	Do
cannot continue at this time	step 7
can continue at this time	step 8

7 Do not switch activity of the units. Reject the switch by typing

>NO

and pressing the Enter key.

The system discontinues the switch of activity.

Return to step 6 during a period of low traffic.

8 Switch the activity of the unit by typing

>YES

and pressing the Enter key.

The system runs a pre-SwAct audit to determine the ability of the inactive unit to accept activity reliably.

Note: A maintenance flag appears when maintenance tasks are in progress. Wait until the flag disappears before proceeding with the next maintenance action.

If the message is	Do
SwAct passed	step 10
SwAct failed	step 9
SwAct refused by SwAct controller	step 9

9 Return to the *Alarm Clearing Procedure* to clear the alarm condition on the inactive unit. When the alarm is cleared, return to step 1 of this procedure.

At the RCE frame

10 Put a sign on the active unit bearing the words *Active unit—Do not touch.*

At the MAP terminal

11 Busy the inactive RCC unit by typing

>BSY UNIT rcc_unit_no

and pressing the Enter key.

where

NT0X91
in an RSC (continued)

rcc_unit_no
is the number of the RCC unit (0 or 1) associated with thefaulty NT0X91

12 Unseat the NT6X48 DS30A interface cards in slots 6 and 7.

13 Post the RMM associated with the faulty NT0X91 by typing

>POST RMM rmm_no

and pressing the Enter key.

where

rmm_no
is the number of the RMM associated with the faulty NT0X91 card.

Example of a MAP display:

```
CM    MS     IOD    Net     PM    CCS    LNS     Trks     Ext    APPL
 .     .      .      .     1RMM    .      .       .        .      .
                           *C*
RMM                 SysB     ManB     OffL     CBsy     ISTb     InSv
 0 Quit     PM        4        0       10       3        3       130
 2 Post_    RMM       1        0        0       0        0         2
 3
 4          RMM  0  SysB
 5 Trnsl
 6 Tst
 7 Bsy
 8 RTS
 9 OffL
10 LoadPM
11 Disp_
12 Next
13
14 QueryPM
15
16
17
18
```

14 Busy the RMM by typing

>BSY

and pressing the Enter key.

Example of a MAP display:

NT0X91 in an RSC (continued)

```
CM    MS     IOD    Net     PM    CCS    LNS     Trks     Ext    APPL
 .     .      .      .     1RMM    .      .        .       .       .

RMM                 SysB     ManB     OffL     CBsy     ISTb     InSv
 0 Quit     PM        4        0       10       3        3       130
 2 Post_    RMM       0        1        0       0        0         2
 3
 4          RMM  0  ManB
 5 Trnsl
 6 Tst
 7 Bsy
 8 RTS
 9 OffL
10 LoadPM
11 Disp_
12 Next
13
14 QueryPM
15
16
17
18
```

At the RCC

15 Pull and set the toggle switch handle of the power converter NT2X70AE POWER switch downward to the OFF position.

At the FSP

16 Turn OFF the CBs for the power converters identified in step 2 associated with the faulty NT0X91 you are replacing.

At the RMM

17 Repeat step 15 and 16 for the NT2X09AA power converter in the RMM shelf associated with the faulty NT0X91 card.

At the FSP

18 Unscrew the slotted nut on the left-hand side of the FSP.

19

DANGER

Risk of electrocution

Some of the terminals inside the frame supervisory panel (FSP) have an electrical potential of -48 V dc. Remove all jewelry before replacing a card in the FSP. Do not touch any terminal in the FSP.

NT0X91
in an RSC (continued)

DANGER
Static electricity damage
Wear a wrist strap connected to the wrist-strap grounding point of a frame supervisory panel (FSP) while handling circuit cards. This protects the cards against damage caused by static electricity.

CAUTION
Loss of service
Ensure that the alarm and control card that you are about to remove is the one that controls the PM units that you have just busied. Removing the wrong card causes a loss of service. Reference the following figure and step Section 2, "Record the frame supervisory panel (FSP) slot, frame circuit breakers (CB), shelves, PM location and units, and power converter slots that are associated with the faulty NT0X91 card you are replacing. Use the following table and figure “RCE frame layout for NT0X91 alarm, converter drive and protection circuit distribution" to obtain this information." on page -76 of this procedure to ensure unseating the correct NT0X91 card..

Open the FSP panel.

NT0X91
in an RSC (continued)

FSP circuit pack layout

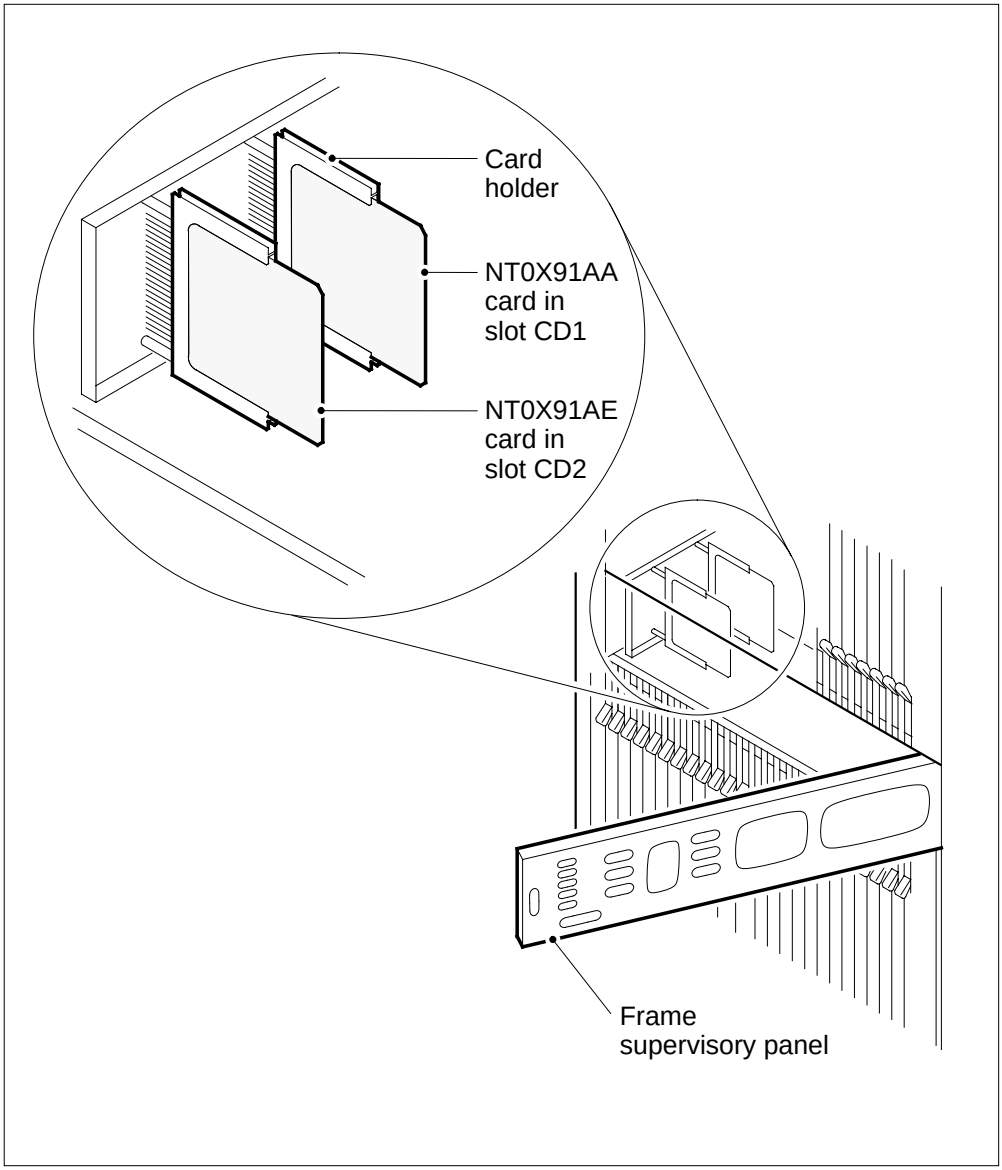

20 Remove the NT0X91 card from the card slot in the FSP. Refer to the figure, “FSP circuit pack layout" for card slot positions.

21 Place the card you have removed in an electrostatic discharge (ESD) protective container.

22 Ensure that the replacement card has the same PEC, including suffix, as the card you just removed.

23 Insert the replacement card.

24 Close the FSP panel.

NT0X91
in an RSC (continued)

25 Tighten the slotted nut on the left side of the FSP.

At the RCC

26 Power up the NT2X70AE power converter.

27 Toggle the ON/OFF/RESET switch on the NT2X70AE power converter faceplate, identified in step 2, to the RESET position and hold while setting the CB, identified in step 2, on the FSP to the ON position. Release the handle and toggle switch.

At the RMM

28 Set the power switch on the NT2X09AA and NT2X06AB power converters on the RMM shelf to the ON position.

a Press the RESET button on the NT2X09AA power converter while setting the CB, identified in step 2, to the ON position. Both the CONVERTER FAIL led and FRAME FAIL lamp on the FSP will go OFF.

b Release the circuit breaker and RESET button.

29 Reseat the NT6X48 DS30A interface cards in slots 6 and 7 unseated in step 12.

30 Use the following information to determine the next step in this procedure.

If you entered this procedure from	Do
an alarm clearing procedure	step 42
other	step 31

At the MAP terminal

31 Post the RCC associated with the new NT0X91 card by typing

```
>POST RCC rcc_unit_no
```

and pressing the Enter key.

where

rcc_unit_no
is the unit number of the RCC associated with the faulty NT0X91 card.

Example of a MAP display:

NT0X91
in an RSC (continued)

```
   CM   MS   IOD   Net   PM   CCS   LNS   Trks   Ext   APPL
    .    .     .    .   1RCC   .     .      .     .      .

 RCC              SysB     ManB     OffL     CBsy     ISTb      InSv
 0 Quit     PM     0        0        2        0        2         25
 2 Post_    RCC    0        0        0        0        1          1
 3 ListSet
 4                RCC      0 ISTb  Links_OOS:  CSide  0,  PSide   0
 5 TRNSL_         Unit 0:  Inact ManB
 6 TST_           Unit 1:   Act  InSv
 7 BSY_
 8 RTS_
 9 OffL
10 LoadPM_
11 Disp_
12 Next_
13 SwAct
14 QueryPM
15
16 IRLINK
17 Perform
18
```

32 The peripheral loader card (NT7X05) allows local loading of the RCC data. Local data loading reduces recovery time. Check if the NT7X05 card is provisioned by typing:

>QUERYPM FILES

and pressing the Enter key.

Example of a MAP display:

NT0X91
in an RSC (continued)

```
   CM   MS   IOD   Net    PM    CCS    LNS    Trks    Ext    APPL
    .    .     .    .    1RCC    .      .       .      .      .

 RCC            SysB     ManB     OffL     CBsy     ISTb     InSv
 0 Quit     PM     2        0        2        0        2       25
 2 Post     RCC    0        0        0        0        1        1
 3 ListSet
 4          RCC      0 ISTb  Links_OOS:  CSide  0,  PSide   0
 5 TRNSL_   Unit 0:  Inact ManB
 6 TST_     Unit 1:  Act   InSv
 7 BSY_
 8 RTS_     QUERYPM files
 9 OffL     Unit 0:
10 LoadPM_      NT7X05 load File: ESR05AY
11 Disp_        NT7X05 Image File:ESR05AY
12 Next_        CMR Load: CMR03A
13 SwAct
14 QueryPM  Unit 1:
15              NT7X05 load File: ESR05AY
16 IRLINK       NT7X05 Image File:ESR05AY
17 Perform      CMR Load: CMR03A
18
```

Note: If the NT7X05 card is not provisioned the MAP response is:

Example of a MAP response:

```
Nt7X05 not datafilled,  QueryPm files invalid
```

If the NT7X05 card is	Do
provisioned	step 33
not provisioned	step 35

33 Load the RCC from the local image by typing

`>LOADPM UNIT unit_no LOCAL IMAGE`

and pressing the Enter key.

where

rcc_unit_no
is the number of the inactive RCC unit

If the load	Do
passed	step 36
failed	step 34

NT0X91 in an RSC (continued)

34 Load the RCC from the local loadfile by typing

>LOADPM UNIT unit_no LOCAL LOADFILE

and pressing the Enter key.

where

rcc_unit_no
is the number of the inactive RCC unit

If the load	Do
passed	step 36
failed	step 35

35 Load the inactive RCC unit from the CM by typing

>LOADPM UNIT rcc_unit_no

and pressing the Enter key.

where

rcc_unit_no
is the number of the inactive RCC unit

36 Return the inactive unit to service by typing

>RTS UNIT unit_no

and pressing the Enter key.

where

unit_no
is the PM unit number (0 or 1)

If the RTS command	Do
passed	step 37
failed	step 43

37 Post the RMM associated with the new NT0X91 by typing

>POST RMM rmm_no

and pressing the Enter key.

where

rmm_no
is the number of the RMM associated with the new NT0X91 card.

Example of a MAP display:

NT0X91
in an RSC (continued)

```
CM    MS     IOD    Net     PM    CCS    LNS     Trks     Ext    APPL
 .     .      .      .     1RMM    .      .       .        .       .

RMM                 SysB     ManB     OffL     CBsy     ISTb     InSv
 0 Quit     PM        4        0       10       3        3       130
 2 Post_    RMM       0        1        1       0        0        2
 3
 4          RMM  0  ManB
 5 Trnsl
 6 Tst
 7 Bsy
 8 RTS
 9 OffL
10 LoadPM
11 Disp_
12 Next
13
14 QueryPM
15
16
17
18
```

38 Load the RMM associated with the new NT0X91 by typing

>LOADPM

and pressing the Enter key.

where

rmm_no
is the number of the RMM associated with the new NT0X91 card.

If the loadpm	Do
passed	step 39
failed	step 43

39 Return the RMM to service by typing

>RTS

and pressing the Enter key.

If the RTS	Do
passed	step 40
failed	step 43

40 Send any faulty cards for repair according to local procedure.

NT0X91 in an RSC (end)

41 Record the following items in office records:

- date the card was replaced
- serial number of the card
- symptoms that prompted replacement of the card.

Go to step 44.

42 Return to the *Alarm Clearing Procedure* that directed you to this card replacement procedure. If necessary, go to the point where the faulty card list was produced, identify the next faulty card on the list, and go to the appropriate replacement procedure in this manual for that card.

43 For further assistance, contact the personnel responsible for the next level of support.

44 You have completed this procedure.

NT0X91AA in an OPM

Application

Use this procedure to replace the following card in an FSP.

PEC	Suffixes	Name
NT0X91	AA	FSP drive and alarm circuit pack

Common procedures

None

Action

The following flowchart is a summary of the procedure. To replace the card, use the instructions in the procedure that follows the flowchart.

NT0X91AA
in an OPM (continued)

Summary of card replacement procedure for an NT0X91AA card in an OPM

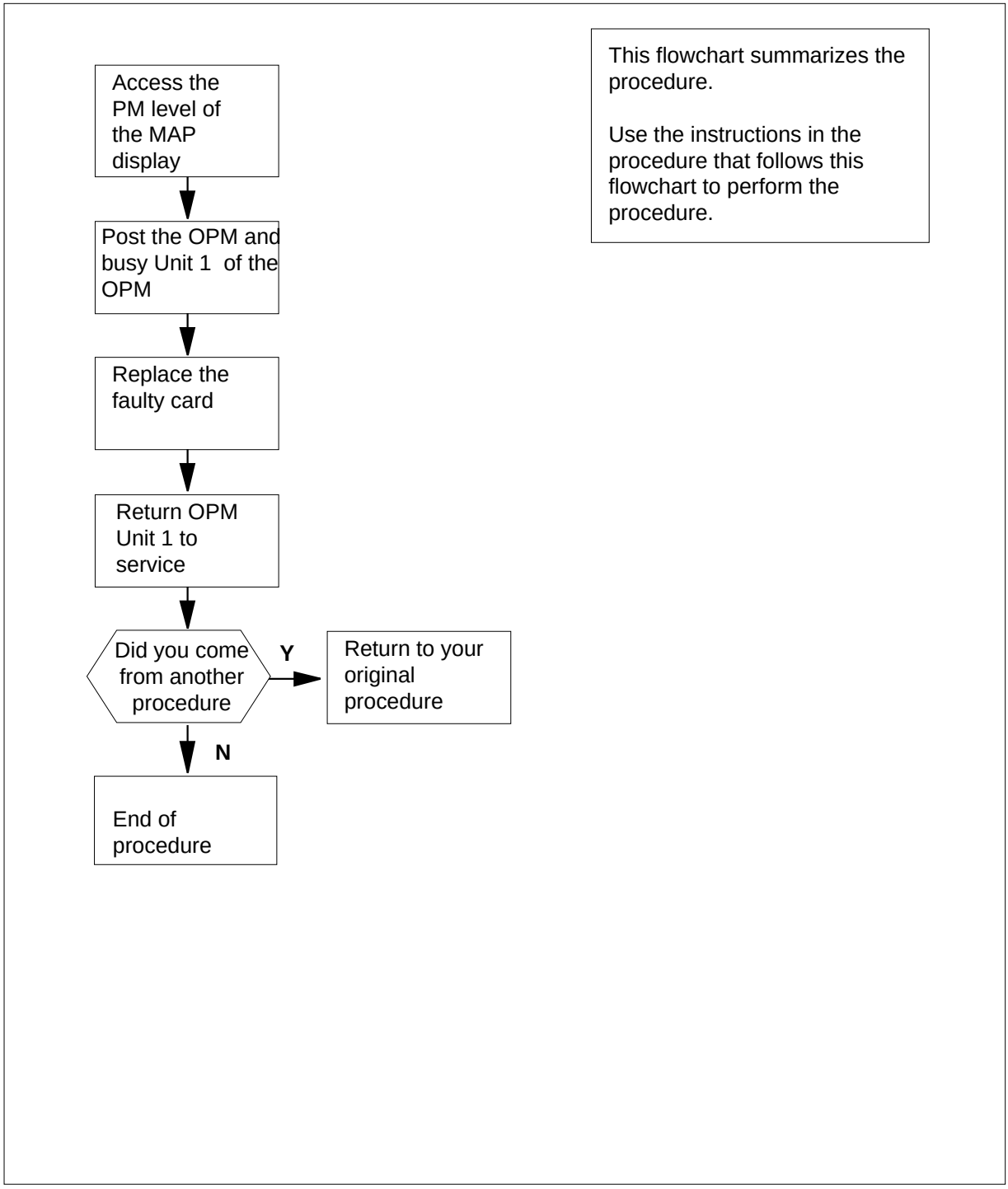

NT0X91AA
in an OPM (continued)

Replacing an NT0X91AA card in an OPM

At your current location

1 Obtain a replacement card. Ensure that the replacement card has the same product engineering code (PEC), including suffix, as the card being removed.

2

FSP Alarm and control cards

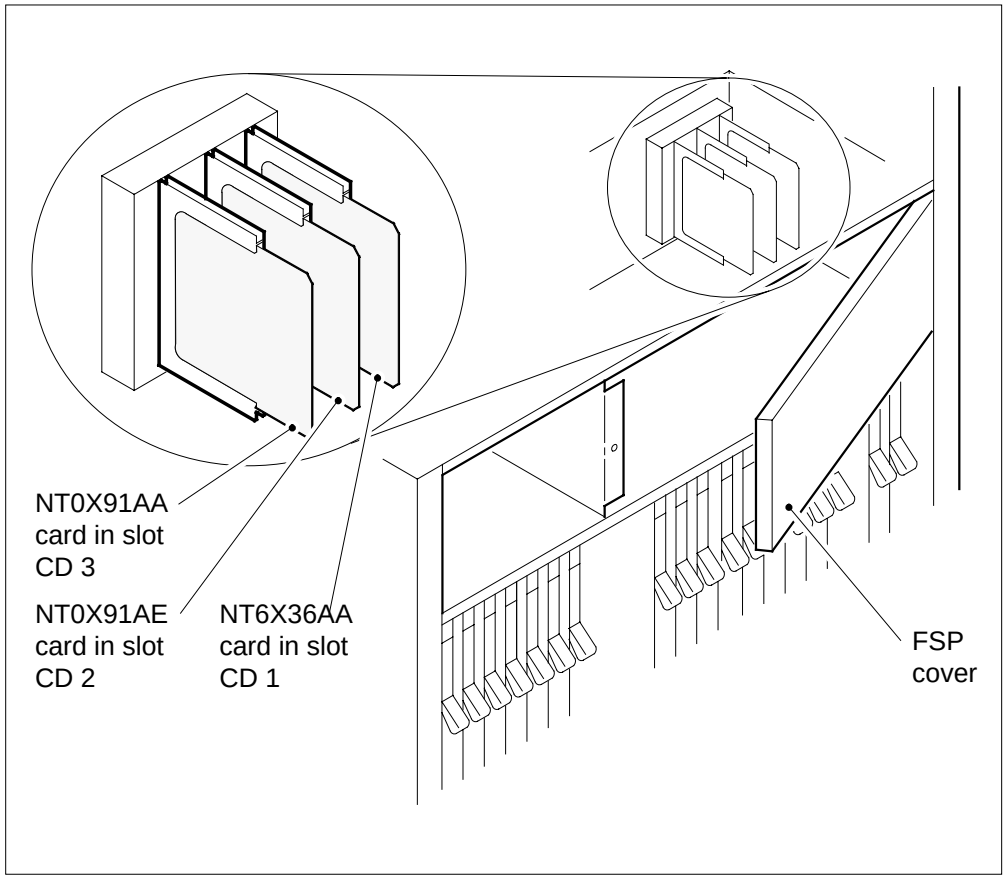

Use the following table to identify the slot containing the alarm and control card to be replaced.

If Alarm and control card	Do slot
NT0X91AA	slot CD3
NT0X91AE	slot CD2
NT6X36AA	slot CD1

Note: Refer to the following (above) diagram for FSP card slot locations.

NT0X91AA
in an OPM (continued)

3 Use the following table to identify which shelves, converters, and circuit breakers (CB) are associated with the alarm and control card you want to replace.

Alarm and Shelf control card	power Converter	shelf number	circuit breaker
NT0X91AA	NT2X70 in slot 22	05	CB4
NT0X91AE	NT2X70 in slot 25	05	CB1
NT0X91AE	NT2X09 and NT2X06	05	CB5
Note: The CBs are located on the FSP, shelf position 19.			

4 Record the numbers of the shelves and CBs associated with the alarm and control card.

5 Record the outside plant module (OPM) shelf associated with the alarm and control card.

At the MAP display

6 Access the PM level of the MAP display by typing

```
>MAPCI;MTC;PM
```

and pressing the Enter key.

7 Post the OPM that is controlled by the alarm and control card as recorded in step 5 by typing

```
>POST LCM  site_name frame_no lcm_no
```

and pressing the Enter key.

where

site_name
is the name of the site where the LCM is located

frame_no
is the number of the frame where the LCM is located

lcm_no
is the number of the LCM associated with the faulty card

NT0X91AA
in an OPM (continued)

8

CAUTION
Loss of service
This procedure contains directions to busy one unit of a peripheral module (PM) in a frame. Since busying a unit of a PM affects redundancy, replace alarm and control cards only during periods of low traffic.

Busy LCM unit 1 by typing

```
>BSY  UNIT 1
```

and pressing the Enter key.

At the OPM cabinet

9 Put on a wrist strap.

10 Set CB4 as recorded in step 4 to the OFF position.

11 Unscrew the slotted nut located on the left-hand side of the FSP.

12

DANGER
Risk of electrocution
Some of the terminals inside the frame supervisory panel (FSP) have an electrical potential of -48 V dc. Remove all jewelry before replacing a card in the FSP. Do not touch any terminals in the FSP.

Open the FSP panel.

13 Remove the NT0X91AA card from the slot identified in step 2.

14 Insert the replacement card.

15 Close the FSP panel.

16 Tighten the slotted nut on the FSP.

17 Set CB4 as recorded in step 4 to the ON position.

18 Proceed as follows to reset the converters in the host interface equipment shelf (HIE).

19 Press and hold the RESET button on the converter while setting the associated CB, identified in step 3, to the ON position.

20 Release the RESET button.

21 Remove the wrist strap.

22 Determine if a Converter Fail LED is lit.

If Converter Fail LED is	Do
lit	step 28
not lit	step 23

At the MAP display

23 Access the PM level of the MAP display by typing

```
>MAPCI;MTC;PM
```

and pressing the Enter key.

24 Post the OPM that is controlled by the alarm and control card as recorded in step 5 by typing

```
>POST LCM  site_name frame_no lcm_no
```

and pressing the Enter key.

where

site_name
is the name of the site where the LCM is located

frame_no
is the number of the frame where the LCM is located

lcm_no
is the number of the LCM unit associated with the faulty card

25 Return to service LCM unit 1 by typing

```
>RTS  UNIT 1
```

and pressing the Enter key.

26 The next action depends on your reason for performing this procedure

If you were	Do
directed to this procedure from a maintenance procedure	step 27
not directed to this procedure from a maintenance procedure	step 29

27 Return to the maintenance procedure that sent you to this procedure and continue as directed.

28 For further assistance, contact the personnel responsible for the next level of support.

29 You have completed this procedure.

NT0X91AE in an OPM

Application

Use this procedure to replace the following card in an FSP.

PEC	Suffixes	Name
NT0X91	AE	FSP drive and alarm circuit pack

Common procedures

None.

Action

The following flowchart is a summary of the procedure. To replace the card, use the instructions in the procedure that follows the flowchart.

NT0X91AE
in an OPM (continued)

Summary of card replacement procedure for an NT0X91AE card in an OPM

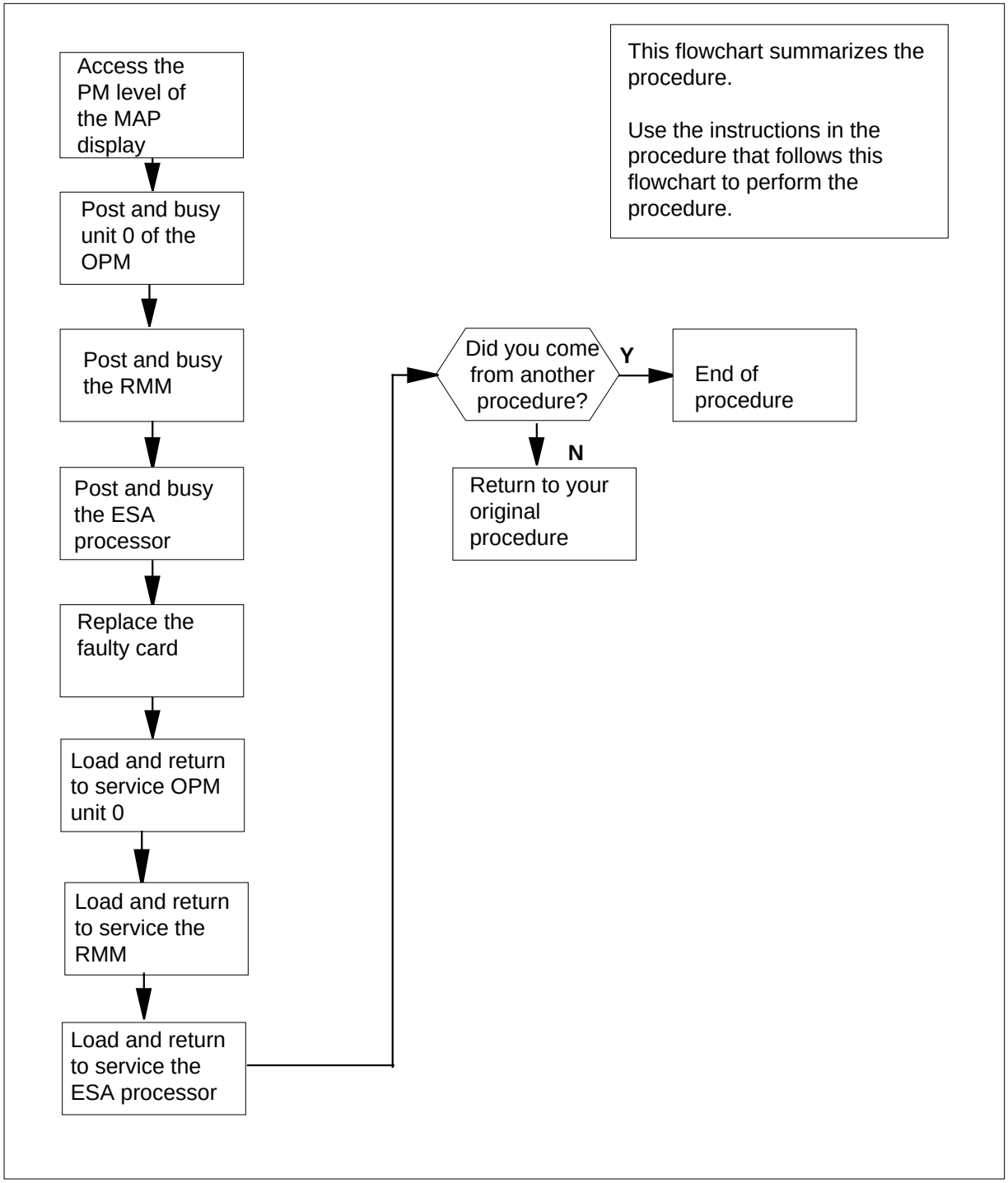

NT0X91AE
in an OPM (continued)

Replacing an NT0X91AE card in an OPM

At your current location

1 Obtain a replacement card. Ensure that the replacement card has the same product engineering code (PEC), including suffix, as the card being removed.

2

FSP Alarm and Control cards

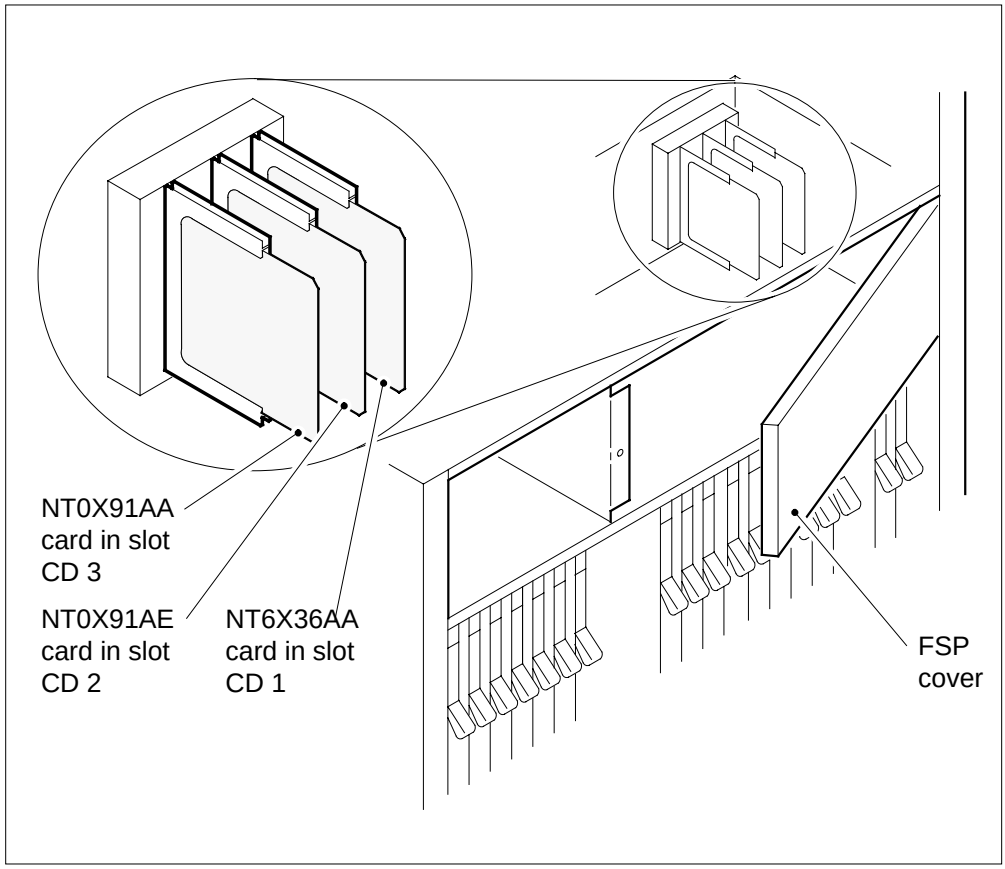

Use the following table to identify the slot containing the alarm and control card to be replaced.

If Alarm and control card	Do slot
NT0X91AA	slot CD3
NT0X91AE	slot CD2
NT6X36AA	slot CD1

Note: Refer to the following (figure above) for FSP card slot locations.

NT0X91AE
in an OPM (continued)

3 Use the following table to identify which shelves, converters, and circuit breakers (CB) are associated with the alarm and control card you want to replace.

Alarm and Shelf control card	power Converter	shelf number	circuit breaker
NT0X91AA	NT2X70 in slot 22	05	CB4
NT0X91AE	NT2X70 in slot 25	05	CB1
NT0X91AE	NT2X09 and NT2X06	05	CB5
Note: The CBs are located on the FSP, shelf position 19.			

4 Record the numbers of the shelves and CBs associated with the alarm and control card.

5 Record the numbers of each outside plant module (OPM), remote maintenance module (RMM) and emergency stand alone (ESA) module associated with the alarm and control card to be replaced.

At the MAP display

6 Access the PM level of the MAP display by typing

```
>MAPCI;MTC;PM
```

and pressing the Enter key.

7

CAUTION
Loss of service
This procedure contains directions to busy one or more peripheral modules (PM) in a frame. Since busying a PM affects subscriber service, replace alarm and control cards only during periods of low traffic.

Post the OPM that is controlled by the alarm and control card as recorded in step 5 by typing

```
>POST LCM  site_name frame_no lcm_no
```

and pressing the Enter key.

where

site_name
is the name of the site where the LCM is located

NT0X91AE
in an OPM (continued)

rame_no
is the number of the frame where the LCM is located

lcm_no
is the number of the LCM unit associated with the faulty card

8 Busy LCM unit 0 by typing

```
>BSY  UNIT 0
```

and pressing the Enter key.

9 Post the RMM that is controlled by the alarm and control card as recorded in step 5 by typing

```
>POST RMM rmm_no
```

and pressing the Enter key.

where

rmm_no
is the number of the RMM to be posted, as recorded in step 5

10 Busy the RMM by typing

```
>BSY
```

and pressing the Enter key.

11 Post the ESA processor that is controlled by the alarm and control card as recorded in step 5 by typing

```
>POST ESA esa_no
```

and pressing the Enter key.

where

esa_no
is the number of the ESA processor to be posted, as recorded in step 5

12 Busy the ESA processor by typing

```
>BSY
```

and pressing the Enter key.

13 Set CB1 as recorded in step 4 to ON.

At the OPM cabinet

14 Put on a wrist strap.

15 Set CB1 as recorded in step 4 to OFF.

16 Set CB5 as recorded in step 4 to OFF.

17 Unscrew the slotted nut located on the left-hand side of the FSP.

NT0X91AE
in an OPM (continued)

18

DANGER
Risk of electrocution
Some of the terminals inside the frame supervisory panel (FSP) have an electrical potential of -48 V dc. Remove all jewelry before replacing a card in the FSP. Do not touch any terminals in the FSP.

Open the FSP panel.

19 Remove the NT0X91AE card from the slot identified in step 2.

20 Insert the replacement card.

21 Close the FSP panel.

22 Tighten the slotted nut on the FSP.

23 Proceed as follows to reset the converters in the host interface equipment shelf (HIE), and the RMM.

24 Power up the NT2X70 in slot 25 as follows:

If NT2X70 suffix is	Do
AE	step 25
AA, AB, AC, or AD	step 26

25 Toggle the ON/OFF/RESET switch on the power converter faceplate, identified in step 3, to the RESET position and hold while setting CB1, on the FSP, to the ON position. Both the converter FAIL LED and FRAME FAIL lamp on the FSP will go OFF, release the ON/OFF/RESET switch.

26 Press the RESET button on the power converter faceplate while setting CB1, identified in step 3, on the FSP to the ON position. The converter FAIL LED will go OFF, release the RESET button.

27 Set the power switch on the NT2X09 and NT2X06 power converters on the RMM shelf to the ON position.

28 Press the RESET button on the NT2X09 power converter while setting CB5, on the FSP to the ON position. Both the converter FAIL LED and FRAME FAIL lamp on the FSP will go off.

29 Remove the wrist strap.

30 Determine if a Converter Fail LED is lit.

If Converter Fail LED is	Do
lit	step 47
not lit	step 31

NT0X91AE
in an OPM (continued)

At the MAP display

31 Access the PM level of the MAP display by typing

```
>MAPCI;MTC;PM
```

and pressing the Enter key.

32 Post the LCM that is controlled by the alarm and control card you have just replaced by typing

```
>POST LCM  site_name frame_no lcm_no
```

and pressing the Enter key.

where

site_name
is the name of the site where the LCM is locatedf

rame_no
is the number of the frame where the LCM is located

lcm_no
is the number of the LCM unit with the faulty card

33 Query the LCM for the name of the current PM load by typing

```
>QUERYPM
```

and pressing the Enter key.

34 Access the disk volume which contains the PM loads by typing

```
>DISKUT
```

and pressing the Enter key.

35 List the disk volume which contains the PM load files by typing

```
>LF  volume_name  ALL
```

and pressing the Enter key.

where

volume_name
is the name of the SLM disk volume containing the PM load files.

36 Quit the diskut environment by typing

```
>QUIT
```

and pressing the Enter key.

37 Load LCM unit 0 by typing

```
>LOADPM  UNIT 0 CC
```

and pressing the Enter key.

38 Return LCM unit 0 to service by typing

```
>RTS  UNIT 0
```

and pressing the Enter key.

If unit 0	Do
RTS passed	step 39
RTS failed	step 47

39 Post the RMM that is controlled by the alarm and control card you have just replaced by typing

>POST RMM rmm_no

and pressing the Enter key.

where

rmm_no
is the number of the RMM to be posted, as recorded in step 5

40 Load the RMM by typing

>LOADPM

and pressing the Enter key.

41 Return the RMM to service by typing

>RTS

and pressing the Enter key.

If the rmm	Do
RTS passed	step 42
RTS failed	step 47

42 Post the ESA processor that is controlled by the alarm and control card you have just replaced by typing

>POST ESA esa_no

and pressing the Enter key.

where

esa_no
is the number of the ESA processor to be posted, as recorded in step 5

43 Load the ESA processor by typing

>LOADPM

and pressing the Enter key.

44 Return the ESA to service by typing

>RTS

NT0X91AE
in an OPM (end)

and pressing the Enter key.

If ESA processor	Do
RTS passed	step 45
RTS failed	step 47

45 The next action depends on your reason for performing this procedure

If you were	Do
directed to this procedure from a maintenance procedure	step 46
not directed to this procedure from a maintenance procedure	step 48

46 Return to the maintenance procedure that sent you to this procedure and continue as directed.

47 For further assistance, contact the personnel responsible for the next level of support.

48 You have completed this procedure.

NT0X91AE in an RLCE

Application

Use this procedure to replace the following card in an FSP.

PEC	Suffixes	Name
NT0X91	AE	FSP drive and alarm circuit pack

Common procedures

None.

Action

The following flowchart is a summary of the procedure. To replace the card, use the instructions in the procedure that follows the flowchart.

NT0X91AE in an RLCE (continued)

Summary of card replacement procedure for an NT0X91AE card in an RLCE

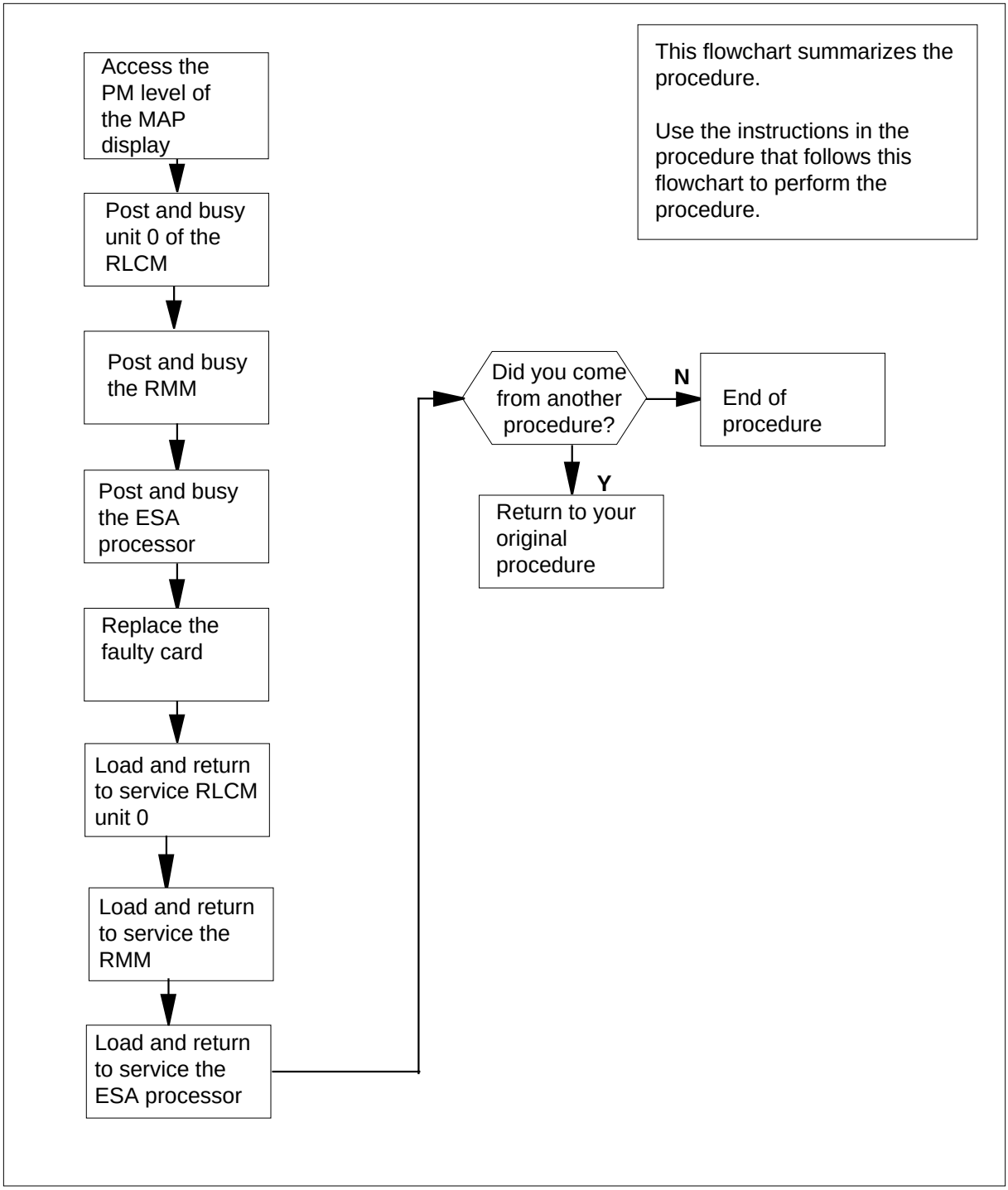

NT0X91AE in an RLCE (continued)

Replacing an NT0X91AE in an RLCE

At your current location

1 Obtain a replacement card. Ensure that the replacement card has the same product engineering code (PEC), including suffix, as the card being removed.

2 Use the following table to identify the slot containing the alarm and control card to be replaced.

If Alarm and control card	Doslot
NT0X91AA	slot CD3
NT0X91AE	slot CD2
NT6X36AA	slot CD1

NT0X91AE
in an RLCE (continued)

Note: Refer to the following for FSP card slot locations.

FSP Alarm and Control cards

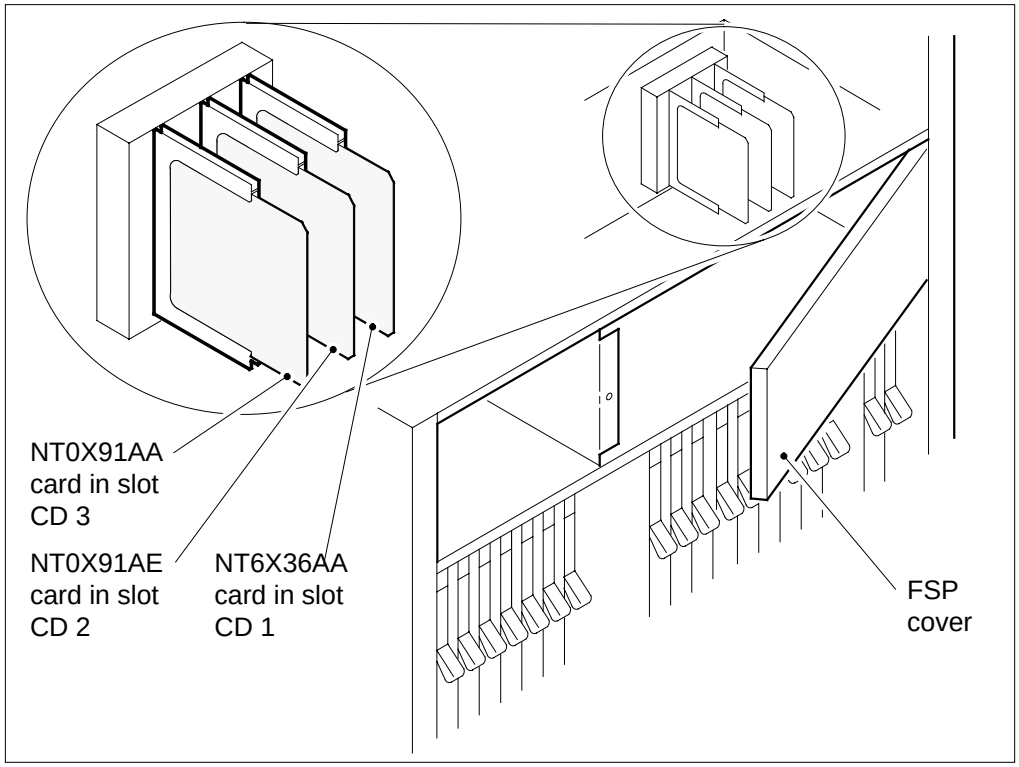

3 Use the following table to identify which shelves, converters, and circuit breakers (CB) are associated with the alarm and control card you want to replace.

Alarm and Shelf control card	power Converter	shelf number	circuit breaker
NT0X91AA	NT2X70 in slot 22	38	CB4
NT0X91AE	NT2X70 in slot 25	38	CB1
NT0X91AE	NT2X09 and NT2X06	55	CB5
Note: The CBs are located on the FSP, shelf position 72.			

NT0X91AE
in an RLCE (continued)

4 Record the numbers of the shelves and CBs associated with the alarm and control card.

5 Record the numbers of each remote line concentrating module (RLCM), remote maintenance module (RMM) and emergency stand alone (ESA) module associated with the alarm and control card to be replaced.

At the MAP display

6 Access the PM level of the MAP display by typing

```
>MAPCI;MTC;PM
```

and pressing the Enter key.

7

CAUTION
Loss of service
This procedure contains directions to busy one or more peripheral modules (PM) in a frame. Since busying a PM affects subscriber service, replace alarm and control cards only during periods of low traffic.

Post the RLCM that is controlled by the alarm and control card as recorded in step 5 by typing

```
>POST LCM  site_name frame_no lcm_no
```

and pressing the Enter key.

where

site_name
is the name of the site where the LCM is locatedf

rame_no
is the number of the frame where the LCM is located

lcm_no
is the number of the LCM unit associated with the faulty card

8 Busy LCM unit 0 by typing

```
>BSY  UNIT 0
```

and pressing the Enter key.

9 Post the RMM that is controlled by the alarm and control card as recorded in step 5 by typing

```
>POST RMM rmm_no
```

and pressing the Enter key.

where

rmm_no
is the number of the RMM to be posted, as recorded in step 5

NT0X91AE
in an RLCE (continued)

10 Busy the RMM by typing

>BSY

and pressing the Enter key.

11 Post the ESA processor that is controlled by the alarm and control card as recorded in step 5 by typing

>POST ESA esa_no

and pressing the Enter key.

where

esa_no
is the number of the ESA processor to be posted, as recorded in step 5

12 Busy the ESA processor by typing

>BSY

and pressing the Enter key.

13 Set CB1 as recorded in step 4 to ON.

At the RCLE frame

14 Put on a wrist strap.

15 Set CB1 as recorded in step 4 to OFF.

16 Set CB5 as recorded in step 4 to OFF.

17 Unscrew the slotted nut located on the left-hand side of the FSP.

18

DANGER
Risk of electrocution
Some of the terminals inside the frame supervisory panel (FSP) have an electrical potential of -48 V dc. Remove all jewelry before replacing a card in the FSP. Do not touch any terminals in the FSP.

Open the FSP panel.

19 Remove the NT0X91AE card from the slot identified in step 2.

20 Insert the replacement card.

21 Close the FSP panel.

22 Tighten the slotted nut on the FSP.

23 Proceed as follows to reset the converters in the host interface equipment shelf (HIE), and the RMM.

NT0X91AE
in an RLCE (continued)

24 Power up the NT2X70 in slot 25 as follows:

If NT2X70 suffix is	Do
AE	step 25
AA, AB, AC, or AD	step 26

25 Toggle the ON/OFF/RESET switch on the power converter faceplate, identified in step 3 , to the RESET position and hold while setting CB1, on the FSP, to the ON position. Both the converter FAIL LED and FRAME FAIL lamp on the FSP will go OFF, release the ON/OFF/RESET switch.

26 Press the RESET button on the power converter faceplate while setting CB1, identified in step 3 , on the FSP to the ON position. The converter FAIL LED will go OFF, release the RESET button.

27 Set the power switch on the NT2X09 and NT2X06 power converters on the RMM shelf to the ON position.

28 Press the RESET button on the NT2X09 power converter while setting CB5, on the FSP to the ON position. Both the converter FAIL LED and FRAME FAIL lamp on the FSP will go off.

29 Remove the wrist strap.

30 Determine if a Converter Fail LED is lit.

If Converter Fail LED is	Do
lit	step 47
not lit	step 31

At the MAP display

31 Access the PM level of the MAP display by typing

```
>MAPCI;MTC;PM
```

and pressing the Enter key.

32 Post the LCM that is controlled by the alarm and control card you have just replaced by typing

```
>POST LCM  site_name frame_no lcm_no
```

and pressing the Enter key.

where

site_name
is the name of the site where the LCM is located

rame_no
is the number of the frame where the LCM is located

lcm_no
is the number of the LCM unit with the faulty card

NT0X91AE
in an RLCE (continued)

33 Query the LCM for the name of the current PM load by typing

>QUERYPM

and pressing the Enter key.

34 Access the disk volume which contains the PM loads by typing

>DISKUT

and pressing the Enter key.

35 List the disk volume which contains the PM load files by typing

>LF volume_name ALL

and pressing the Enter key.

where

volume_name
is the name of the SLM disk volume containing the PM load files.

36 Quit the diskut environment by typing

>QUIT

and pressing the Enter key.

37 Load LCM unit 0 by typing

>LOADPM UNIT 0 CC

and pressing the Enter key.

38 Return LCM unit 0 to service by typing

>RTS UNIT 0

and pressing the Enter key.

If unit 0	Do
RTS passed	step 39
RTS failed	step 47

39 Post the RMM that is controlled by the alarm and control card you have just replaced by typing

>POST RMM rmm_no

and pressing the Enter key.

where

rmm_no
is the number of the RMM to be posted, as recorded in step 5

40 Load the RMM by typing

>LOADPM

and pressing the Enter key.

41 Return the RMM to service by typing

>RTS

and pressing the Enter key.

If the rmm	Do
RTS passed	step 42
RTS failed	step 47

42 Post the ESA processor that is controlled by the alarm and control card you have just replaced by typing

>POST ESA esa_no

and pressing the Enter key.

where

esa_no
is the number of the ESA processor to be posted, as recorded in step 5

43 Load the ESA processor by typing

>LOADPM

and pressing the Enter key.

44 Return the ESA to service by typing

>RTS

and pressing the Enter key.

If ESA processor	Do
RTS passed	step 45
RTS failed	step 47

45 The next action depends on your reason for performing this procedure

If you were	Do
directed to this procedure from a maintenance procedure	step 46
not directed to this procedure from a maintenance procedure	step 48

46 Return to the maintenance procedure that sent you to this procedure and continue as directed.

47 For further assistance, contact the personnel responsible for the next level of support.

48 You have completed this procedure.

NT2X06 in an IOPAC RMM

Application

Use this procedure to replace the following card in a remote maintenance module (RMM).

PEC	Suffix	Name
NT2X06	AB	Power converter common features

Common procedures

The replacing a card procedure is referenced in this procedure.

Action

The following flowchart is only a summary of the procedure. To replace the card, use the instructions in the step-action procedure that follows the flowchart.

NT2X06 in an IOPAC RMM (continued)

Summary of card replacement procedure for an NT2X06 in an RMM

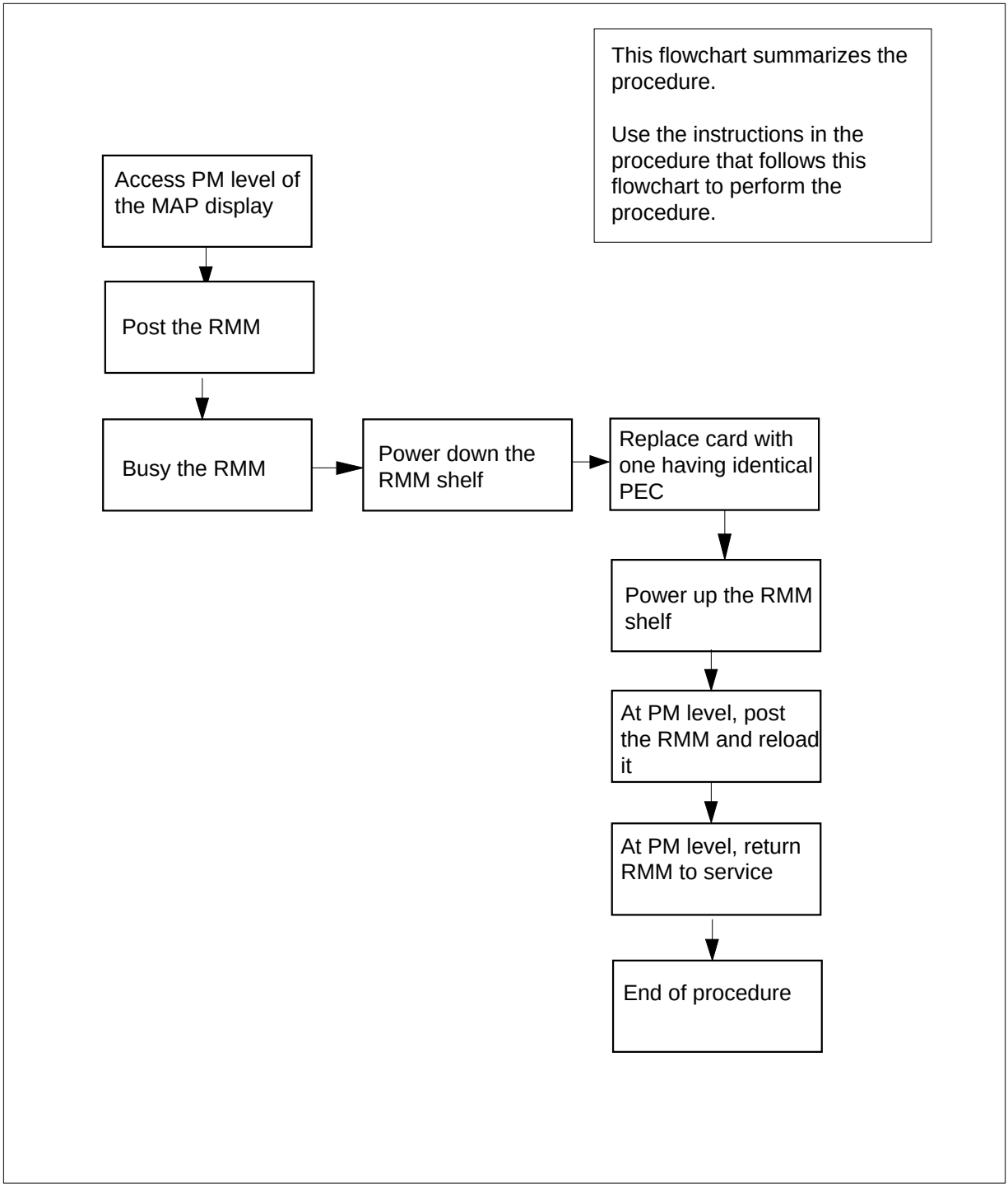

NT2X06 in an IOPAC RMM (continued)

Replacing an NT2X06 in an RMM

At your current location

1 Obtain a replacement card. Ensure that the replacement card has the same product equipment code (PEC), including suffix, as the card to be removed.

2 If you were directed to this procedure from the *Alarm Clearing Procedures*, go to step 6. Otherwise, continue with step 3.

At the MAP terminal

3 Access the peripheral module (PM) level of the MAP display by typing

>MAPCI;MTC;PM

and pressing the Enter key.

4 Post the RMM by typing

>POST RMM rmm_no

and pressing the Enter key.

where

rmm_no
is the number of the RMM shelf where the card is to be replaced

Example of a MAP response:

```
          SysB      ManB      Offl      CBsy      ISTb     InSv
PM           0         2         2         0         7       21
RMM          1         0         1         0         0        6

RMM      0     SysB
```

5 Busy the RMM by typing

>BSY

and pressing the Enter key.

At the RMM

6

DANGER
Static electricity damage
Wear a wrist strap connected to the wrist strap grounding point at the top of each equipment rack, (Bay 0, 1, 2, and 3), while handling circuit cards. This protects the cards against damage caused by static electricity.

Power down the unit by setting the ON/OFF switch on the power converter faceplate to the OFF position. Both the CONVERTER FAIL LED and FRAME FAIL LED on the modular supervisory panel (MSP) will be ON.

7 Replace the NT2X06 card using the common replacing a card procedure in this document. When you have completed the procedure, return to this point in the procedure.

8 Power up the RMM unit as follows:

Ensure the converter (NT2X06) is inserted. Set the POWER switch to the ON position.

9 Press the RESET button on the power converter while setting the circuit breaker on the MSP to the ON position. Both the CONVERTER FAIL LED and FRAME FAIL lamp on the MSP will be ON.

10 If you were directed to this procedure from the *Alarm Clearing Procedures*, return now to the alarm clearing procedure that directed you here. Otherwise, continue with step 11.

At the MAP terminal

11 Go to the PM level and post the RMM, if not already posted, and load the RMM by typing

`>PM;POST rmm_no;LOADPM`

and pressing the Enter key

where

rmm_no
is the number of the RMM shelf where the card is to be replaced

If	Do
message is `loadfile not found in directory`	step 12
load passed	step 29
load failed	step 32

NT2X06
in an IOPAC RMM (continued)

At the RMM

12 Determine the type of device where the PM load files are located.

If load files are located on	Do
tape	step 13
IOC disk	step 19
SLM disk	step 24

13 Locate the tape that contains the PM load files.

14 Mount the tape on a magnetic tape drive.

At the MAP terminal

15 Download the tape by typing

`>MOUNT tape_no`

and pressing the Enter key.

where

tape_no
is the number of the tape containing the PM load files

16 List the contents of the tape in your user directory by typing

`>LIST T tape_no`

and pressing the Enter key.

where

tape_no
is the number of the tape containing the PM load files

17 Demount the tape drive by typing

`>DEMOUNT T tape_no`

and pressing the Enter key.

where

tape_no
is the number of the tape drive containing the PM load files

18 Go to step 28.

19 From office records, determine and note the number of the input/output controller (IOC) disk and the name of the volume that contains the PM load files.

20 Access the disk utility level of the MAP display by typing

`>DSKUT`

and pressing the Enter key.

NT2X06
in an IOPAC RMM (continued)

21 List the IOC file names into your user directory by typing

>LISTVOL volume_name ALL

and pressing the Enter key.

where

volume_name
is the name of the volume that contains the PM load files obtained in step 19.

22 Leave the disk utility by typing

>QUIT

and pressing the Enter key.

23 Go to step 28.

24 From office records, determine and note the number of the system load module (SLM) disk and the name of the volume that contains the PM load files.

25 Access the disk utility level of the MAP display by typing

>DISKUT

and pressing the Enter key.

26 List the SLM file names into your user directory by typing

>LV CM;LF file_name

and pressing the Enter key.

where

file_name
is the name of the SLM disk volume containing the PM load files obtained in step 24.

27 Leave the disk utility by typing

>QUIT

and pressing the Enter key.

28 Reload the RMM by typing

>LOADPM

and pressing the Enter key.

If	Do
load failed	step 32
load passed	step 29

29 Return the RMM to service by typing

>RTS

NT2X06 in an IOPAC RMM (end)

and pressing the Enter key.

If RTS	Do
passed	step 33
failed	step 32

30 Send any faulty cards for repair according to local procedure.

31 Record the following items in office records:

- date the card was replaced
- serial number of the card
- symptoms that prompted replacement of the card

Go to step 33.

32 Obtain further assistance in replacing this card by contacting the personnel responsible for higher level of support.

33 You have completed this procedure.

NT2X06 in an OPM RMM

Application

Use this procedure to replace the following card in an RMM.

PEC	Suffixes	Name
NT2X06	AA, AB	Power Converter (5V/40A)

Common procedures

The replacing a card procedure is referenced in this procedure.

Action

The following flowchart is a summary of the procedure. To replace the card, use the instructions in the procedure that follows the flowchart.

NT2X06 in an OPM RMM (continued)

Summary of card replacement procedure for an NT2X06 card in an RMM

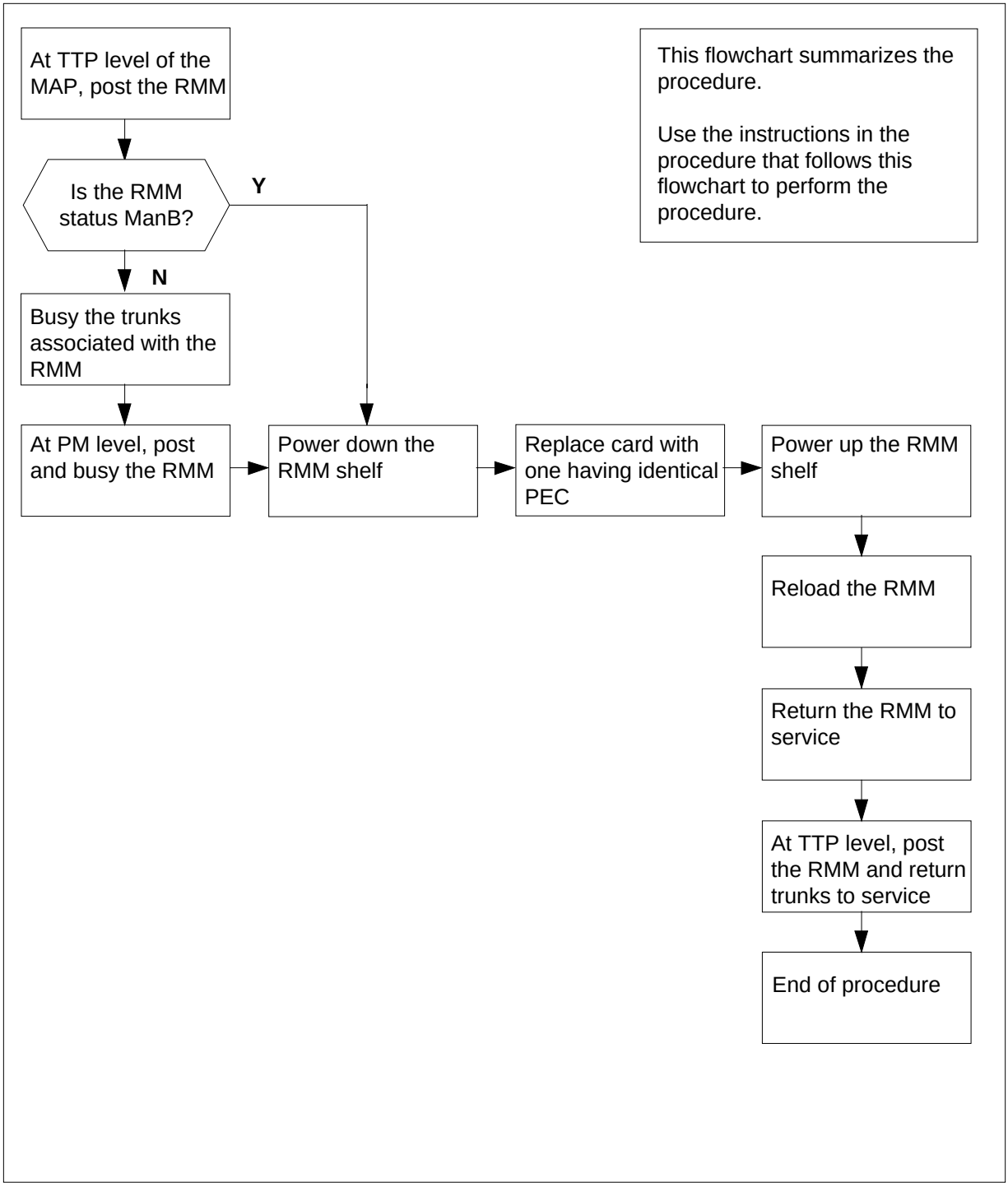

NT2X06 in an OPM RMM (continued)

Replacing an NT2X06 card in an RMM

At your current location

1 Obtain a replacement card. Ensure that the replacement card has the same product equipment code (PEC), including suffix, as the card to be removed.

2 If you were directed to this procedure from another maintenance procedure, go to step 8; otherwise, continue with step 3.

At the MAP display

3 Access the TTP level of the MAP and post the RMM that contains the card to be replaced by typing

`>MAPCI;MTC;TRKS;TTP;POST P RMM rmm_no`

and pressing the Enter key.

where

rmm_no
is the number of the RMM shelf in which the card is to be replaced

Example of a MAP response:

```
LAST CIRCUIT = 27
POST CKT IDLED
SHORT CLLI IS:  OTDA00
OK, CLLI POSTED

POST  20   DELQ       BUSY Q          DIG
TTP 6-006
CKT TYPE   PM NO.     COM LANG        STA S R DOT TE R
OG    MF RMM 0 0  OTWAON23DA00 2001   LO
                                      P_IDL
```

4 Check the status of the RMM.

If	Do
MB, PMB, RMB	step 8
other	step 5

5 Busy the trunks that are associated with the RMM to be busied by typing

`>BSY ALL`

and pressing the Enter key.

6 At the PM level of the MAP display, post the RMM by typing

`>PM;POST RMM rmm_no`

and pressing the Enter key.

where

NT2X06
in an OPM RMM (continued)

rmm_no
is the number of the RMM shelf in which the card is to be replaced

Example of a MAP display:

```
          SysB      ManB      Offl      CBsy      ISTb      InSv
PM           0         2         2         0         7        21
RMM          0         0         1         0         0         6

RMM     0     InSv
```

7 Busy the RMM by typing

>BSY

and pressing the Enter key.

At the RMM shelf

8

DANGER
Static electricity damage
Wear a wrist strap connected to the wrist strap grounding point of a frame supervisory panel (FSP) while handling circuit cards. This protects the cards against damage caused by static electricity.

Power down the unit by setting the ON/OFF switch on the power converter faceplate to the OFF position. Both the converter FAIL LED and FRAME FAIL lamp on the frame supervisory panel (FSP) will be ON. An audible alarm may sound. If an alarm does sound, silence it by typing

>sil

and pressing the Enter key.

9 Replace the NT2X06 card using the common replacing a card procedure in this document. When you have completed the procedure, return to this point.

10 Power up the RMM unit as follows:

a Ensure that the converter (NT2X06) is inserted. A major audible alarm may sound. This alarm is silenced when power is restored to the converter.

b Set the POWER switch to the ON position.

11 Press the RESET button on the power converter while setting the circuit breaker on the frame supervisory panel (FSP) to the ON position. Both the converter FAIL LED and FRAME FAIL lamp on the FSP will be ON.

12 If you were directed to this procedure from another maintenance procedure, return now to the procedure that directed you here and continue as directed; otherwise, continue with step 13.

NT2X06
in an OPM RMM (continued)

At the MAP display

13 Go to the PM level and post the RMM, if not already posted, and load the RMM by typing

>PM;POST RMM rmm_no;LOADPM

and pressing the Enter key.

where

rmm_no
is the number of the RMM shelf in which the card is to be replaced

If	Do
message `loadfile not found in directory` is received	step 14
load passes	step 31
load fails	step 36

14 Determine the type of device on which the PM load files are located.

If load files are located on	Do
tape	step 15
IOC disk	step 21
SLM disk	step 26

15 Locate the tape that contains the PM load files.

At the IOE frame

16 Mount the tape on a magnetic tape drive.

At the MAP display

17 Download the tape by typing

>MOUNT tape_no

and pressing the Enter key.

where

tape_no
is the number of the tape drive containing the PM load files

18 List the contents of the tape in your user directory by typing

>LIST T tape_no

and pressing the Enter key.

wherewhere

NT2X06
in an OPM RMM (continued)

tape_no
is the number of the tape drive containing the PM load files

19 Demount the tape drive by typing

```
>DEMOUNT T tape_no
```

and pressing the Enter key.

wherewhere

tape_no
is the number of the tape drive containing the PM load files

20 Go to step 30.

21 From office records, determine and note the number of the input/output controller (IOC) disk and the name of the volume that contains the PM load files.

22 Access the disk utility level of the MAP by typing

```
>DSKUT
```

and pressing the Enter key.

23 List the IOC file names into your user directory by typing

```
>LISTVOL volume_name ALL
```

and pressing the Enter key.

where

volume_name
is the name of the volume that contains the PM load files obtained in step 21.

24 Leave the disk utility by typing

```
>QUIT
```

and pressing the Enter key.

25 Go to step 30.

26 From office records, determine and note the number of the system load module (SLM) disk and the name of the volume that contains the PM load files.

27 Access the disk utility level of the MAP by typing

```
>DISKUT
```

and pressing the Enter key.

28 List the SLM file names into your user directory by typing

```
>LV CM;LF  Volume_name
```

and pressing the Enter key.

where

Volume_name
is the name of the volume containing the PM load files, obtained in step 26.

NT2X06
in an OPM RMM (continued)

29 Leave the disk utility by typing

>QUIT

and pressing the Enter key.

30 Reload the RMM by typing

>LOADPM

and pressing the Enter key.

If	Do
load failed	step 36
load passed	step 31

31 Return the RMM to service by typing

>RTS

and pressing the Enter key.

If RTS	Do
passed	step 32
failed	step 36

32 Go to the TTP level of the MAP and post the RMM by typing

>TRKS;TTP;POST P RMM rmm_no

and pressing the Enter key.

where

rmm_no
is the number of the RMM shelf in which the card is to be replaced

33 Return to service the circuits busied in step 7 by typing

>RTS ALL

and pressing the Enter key.

If	Do
passed	step 34
failed	step 36

34 Send any faulty cards for repair according to local procedure.

35 Record the following items in office records:

- date the card was replaced
- serial number of the card
- symptoms that prompted replacement of the card

NT2X06 in an OPM RMM (end)

Go to step 37.

36 Obtain further assistance in replacing this card by contacting the personnel responsible for higher level of support.

37 You have completed this procedure.

NT2X06 in an RLCM RMM

Application

Use this procedure to replace an NT2X06 in a remote maintenance module (RMM).

PEC	Suffix	Name
NT2X06	AB	Power converter common features

Common procedures

The replacing a card procedure is referenced in this procedure.

Action

The following flowchart is only a summary of the procedure. To replace the card, use the instructions in the step-action procedure that follows the flowchart.

NT2X06
in an RLCM RMM (continued)

Summary of card replacement procedure for an NT2X06 in an RMM

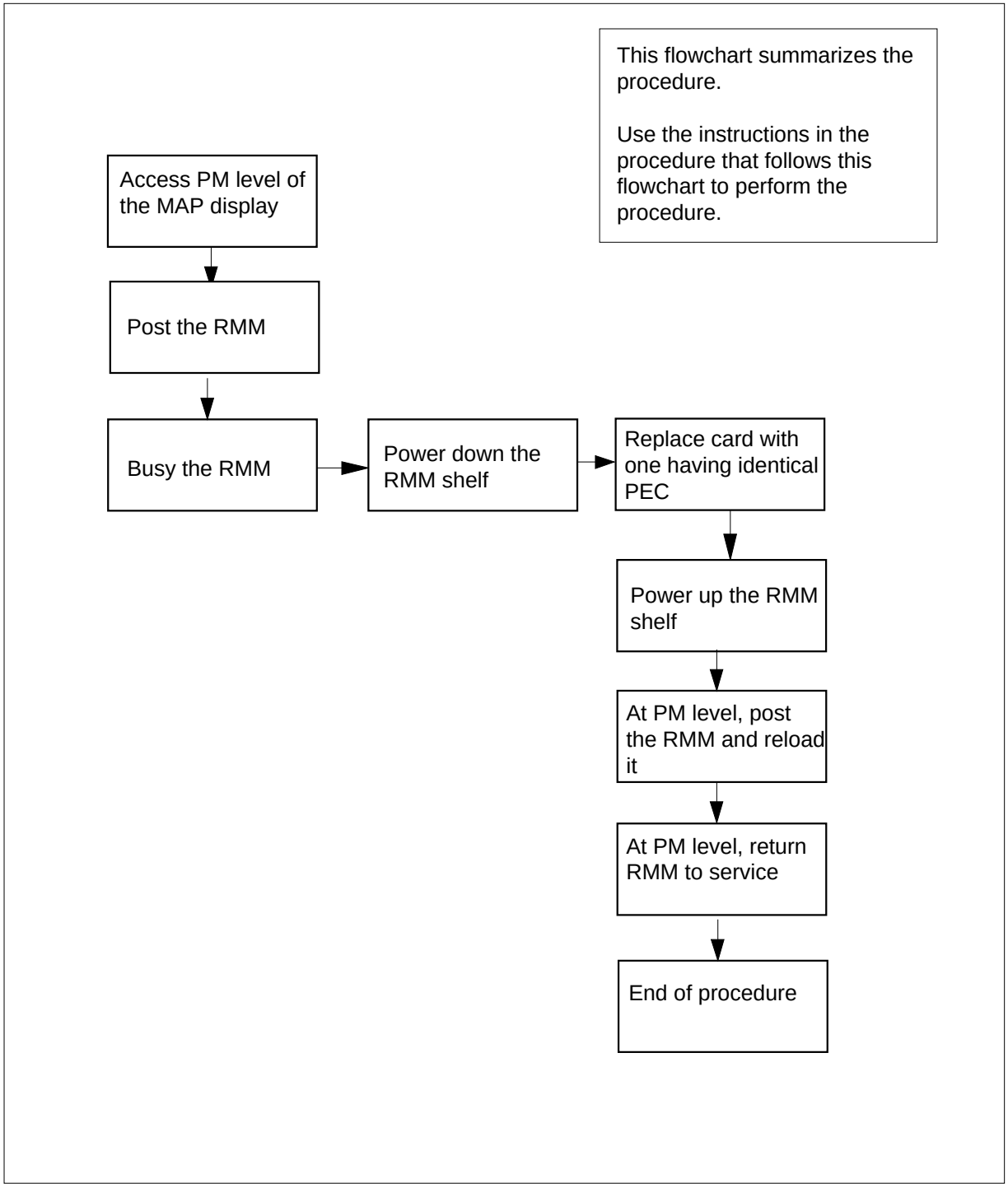

NT2X06
in an RLCM RMM (continued)

Replacing an NT2X06 card in an RMM

At your current location

1 Obtain a replacement card. Ensure that the replacement card has the same product equipment code (PEC), including suffix, as the card to be removed.

2 If you were directed to this procedure from the *Alarm Clearing Procedures*, go to step 6. Otherwise, continue with step 3.

At the MAP terminal

3 Access the peripheral module (PM) level of the MAP display by typing

>MAPCI;MTC;PM

and pressing the Enter key.

4 Post the RMM by typing

>POST RMM rmm_no

and pressing the Enter key.

where

rmm_no
is the number of the RMM shelf where the card is to be replaced

Example of a MAP response:

```
          SysB      ManB      Offl      CBsy      ISTb     InSv
PM           0         2         2         0         7       21
RMM          1         0         1         0         0        6

RMM      0     SysB
```

5 Busy the RMM by typing

>BSY

and pressing the Enter key.

NT2X06
in an RLCM RMM (continued)

At the RMM

6

DANGER
Static electricity damage
Wear a wrist strap connected to the wrist strap grounding point at the top of each equipment rack, (Bay 0, 1, 2, and 3), while handling circuit cards. This protects the cards against damage caused by static electricity.

Power down the unit by setting the ON/OFF switch on the power converter faceplate to the OFF position. Both the CONVERTER FAIL LED and FRAME FAIL LED on the modular supervisory panel (MSP) will be ON.

7 Replace the NT2X06 card using the common replacing a card procedure in this document. When you have completed the procedure, return to this point in the procedure.

8 Power up the RMM unit as follows:

Ensure the converter (NT2X06) is inserted. Set the POWER switch to the ON position.

9 Press the RESET button on the power converter while setting the circuit breaker on the MSP to the ON position. Both the CONVERTER FAIL LED and FRAME FAIL lamp on the MSP will be ON.

10 If you were directed to this procedure from the *Alarm Clearing Procedures*, return now to the alarm clearing procedure that directed you here. Otherwise, continue with step 11.

At the MAP terminal

11 Go to the PM level and post the RMM, if not already posted, and load the RMM by typing

`>PM;POST RMM rmm_no;LOADPM`

and pressing the Enter key

where

rmm_no
is the number of the RMM shelf where the card is to be replaced

If	Do
message is `loadfile not found in directory`	step 12
load passed	step 29
load failed	step 32

At the RMM

12 Determine the type of device where the PM load files are located.

If load files are located on	Do
tape	step 13
IOC disk	step 19
SLM disk	step 24

13 Locate the tape that contains the PM load files.

14 Mount the tape on a magnetic tape drive.

At the MAP terminal

15 Download the tape by typing

`>MOUNT tape_no`

and pressing the Enter key.

where

tape_no
is the number of the tape containing the PM load files

16 List the contents of the tape in your user directory by typing

`>LIST T tape_no`

and pressing the Enter key.

where

tape_no
is the number of the tape containing the PM load files

17 Demount the tape drive by typing

`>DEMOUNT T tape_no`

and pressing the Enter key.

where

tape_no
is the number of the tape drive containing the PM load files

18 Go to step 28.

19 From office records, determine and note the number of the input/output controller (IOC) disk and the name of the volume that contains the PM load files.

20 Access the disk utility level of the MAP display by typing

`>DSKUT`

and pressing the Enter key.

NT2X06
in an RLCM RMM (continued)

21 List the IOC file names into your user directory by typing

`>LISTVOL volume_name ALL`

and pressing the Enter key.

where

volume_name
is the name of the volume that contains the PM load files obtained in step 19.

22 Leave the disk utility by typing

`>QUIT`

and pressing the Enter key.

23 Go to step 28.

24 From office records, determine and note the number of the system load module (SLM) disk and the name of the volume that contains the PM load files.

25 Access the disk utility level of the MAP display by typing

`>DISKUT`

and pressing the Enter key.

26 List the SLM file names into your user directory by typing

`>LV CM;LF file_name`

and pressing the Enter key.

where

file_name
is the name of the SLM disk volume containing the PM load files obtained in step 24.

27 Leave the disk utility by typing

`>QUIT`

and pressing the Enter key.

28 Reload the RMM by typing

`>LOADPM`

and pressing the Enter key.

If	Do
load failed	step 32
load passed	step 29

29 Return the RMM to service by typing

`>RTS`

and pressing the Enter key.

If RTS	Do
passed	step 33
failed	step 32

30 Send any faulty cards for repair according to local procedure.

31 Record the following items in office records:

- date the card was replaced
- serial number of the card
- symptoms that prompted replacement of the card

Go to step 33.

32 Obtain further assistance in replacing this card by contacting the personnel responsible for higher level of support.

33 You have completed this procedure.

NT2X06 in an RSC RMM

Application

Use this procedure to replace the following card in an RSC RMM.

PEC	Suffixes	Name
NT2X06	AB	5V/40A power converter

Common Procedures

None

Action

The following flowchart is a summary of the procedure. To replace the card, use the instructions in the procedure that follows the flowchart.

NT2X06
in an RSC RMM (continued)

Summary of card replacement procedure for an NT2X06 card in RSC RMM

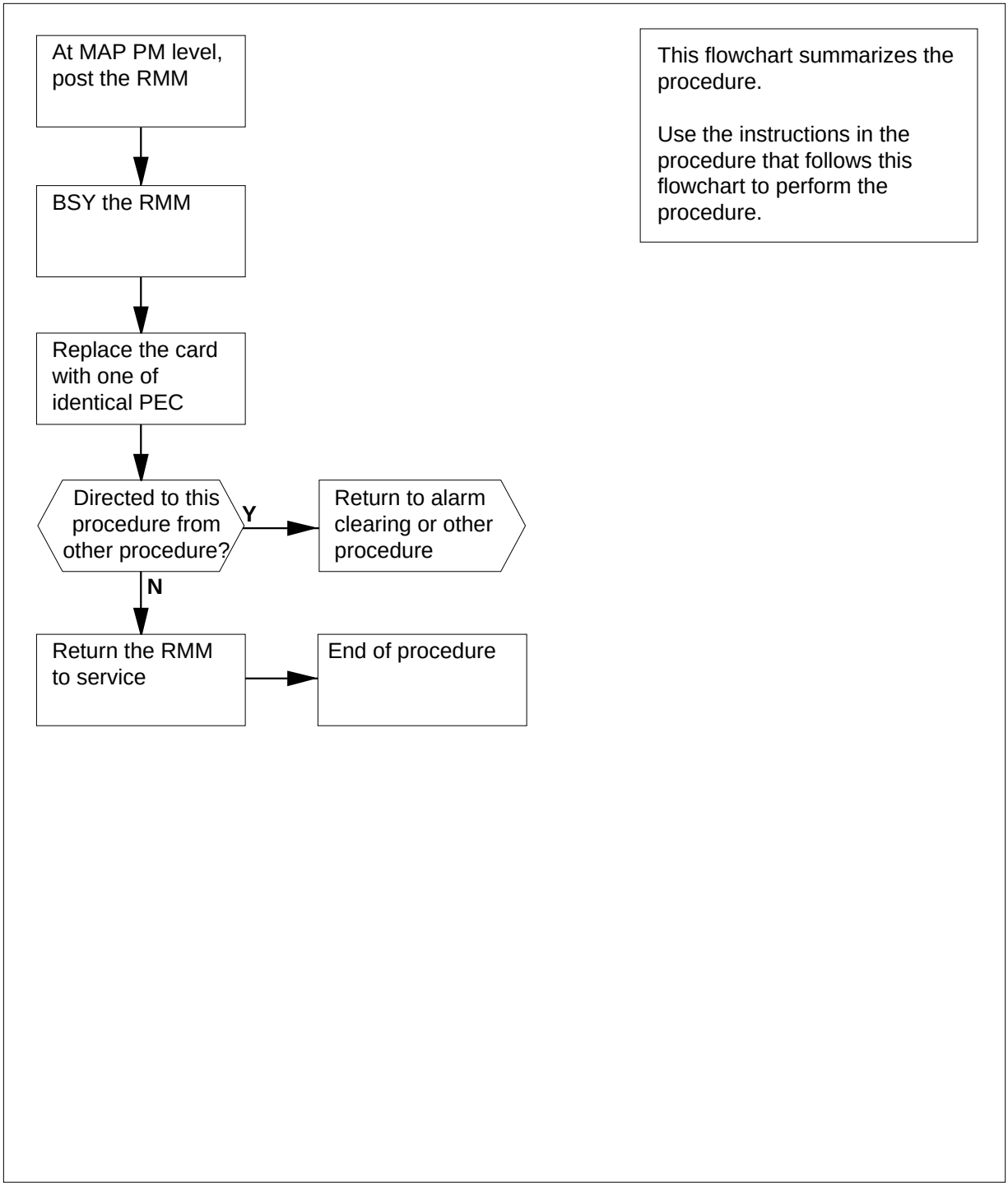

NT2X06
in an RSC RMM (continued)

Replacing an NT2X06 card in RSC RMM

At your current location

1 Proceed only if you were either directed to this card replacement procedure from a step in a maintenance procedure, are using the procedure to verify or accept cards, or were directed to this procedure by your maintenance support group.

2 Obtain a replacement card. Ensure the replacement card has the same product equipment code (PEC) including suffix, as the card to be removed.

At the MAP display

3 Access the PM level and post the RMM by typing

>MAPCI;MTC;PM;POST RMM rmm_no

and pressing the Enter key.

where

rmm_no
is the number of the RMM from which the card is to be removed

Example of a MAP display:

```
 CM     MS     IOD    Net    PM     CCS    LNS   Trks    Ext   Appl
 .      .       .      .      .      .      .      .      .     .
RMM               SysB     ManB     OffL     CBsy     ISTb      InSv
 0 Quit    PM        4        0       10        3        3       130
 2 Post_   RMM       0        1        1        0        0         2
 3
 4         RMM  5  INSV
 5 Trnsl
 6 Tst
 7 Bsy
 8 RTS
 9 OffL
10 LoadPM
11 Disp_
12 Next
13
14 QueryPM
15
16
17
18
```

4 Busy the RMM by typing

>BSY

and pressing the Enter key.

Example of a MAP display:

```
   CM    MS    IOD    Net    PM    CCS    LNS    Trks    Ext    APPL
   .     .      .      .    4SysB   .      .       .      .      .

RMM               SysB     ManB     OffL     CBsy     ISTb      InSv
 0 Quit    PM        4        0       10        3        3       130
 2 Post_   RMM       0        1        1        0        0         2
 3
 4         RMM  5  ManB
 5 Trnsl
 6 Tst
 7 Bsy
 8 RTS
 9 OffL
10 LoadPM
11 Disp_
12 Next
13
14 QueryPM
15
16
17
18
```

At the RMM shelf

5

CAUTION
Static discharge may cause damage to circuit packs
Put on a wrist strap and connect it to the frame of the RMM before removing or inserting any cards. This protects the RMM against service degradation caused by static electricity.

Put on a wrist strap.

6 Power down the unit by setting the ON/OFF switch on the power converter faceplate to the OFF position. Both the converter FAIL LED and FRAME FAIL lamp on the frame supervisory panel (FSP) will be ON. An audible alarm may sound. If an alarm does sound, silence it by typing

`>SIL`

and pressing the Enter key.

NT2X06
in an RSC RMM (continued)

7

DANGER
Equipment damage
Take these precautions when removing or inserting a card:

1. Do not apply direct pressure to the components.
2. Do not force the cards into the slots.

Remove the NT2X06 card as shown in the following figures.

a Locate the card to be removed on the appropriate shelf.

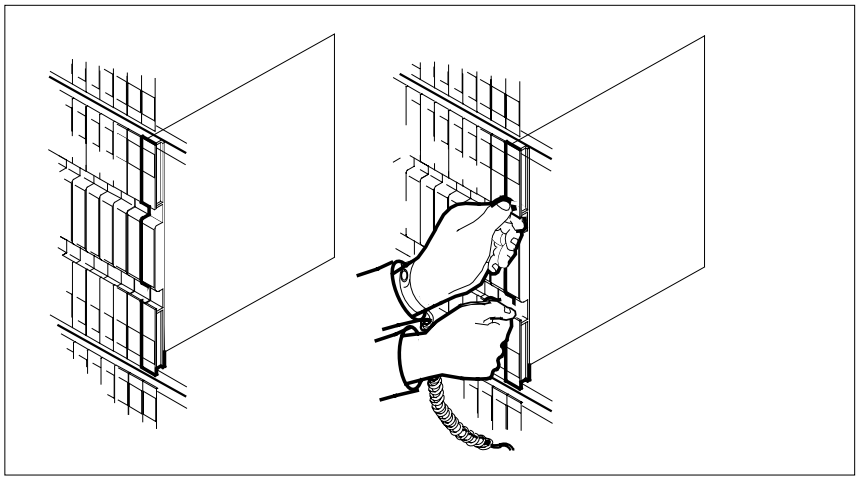

b Open the locking levers on the card to be replaced and gently pull the card towards you until it clears the shelf.

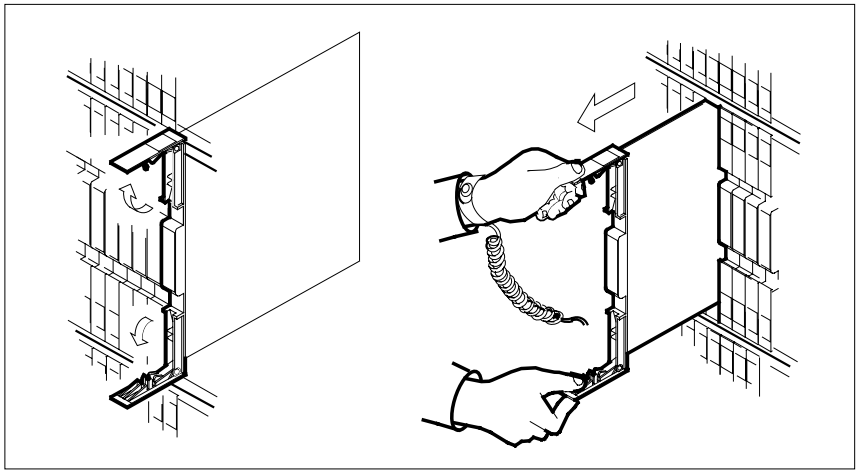

NT2X06
in an RSC RMM (continued)

c Ensure the replacement card has the same PEC, including suffix, as the card you just removed.

8 Open the locking levers on the replacement card.

Align the card with the slots in the shelf and gently slide the card into the shelf.

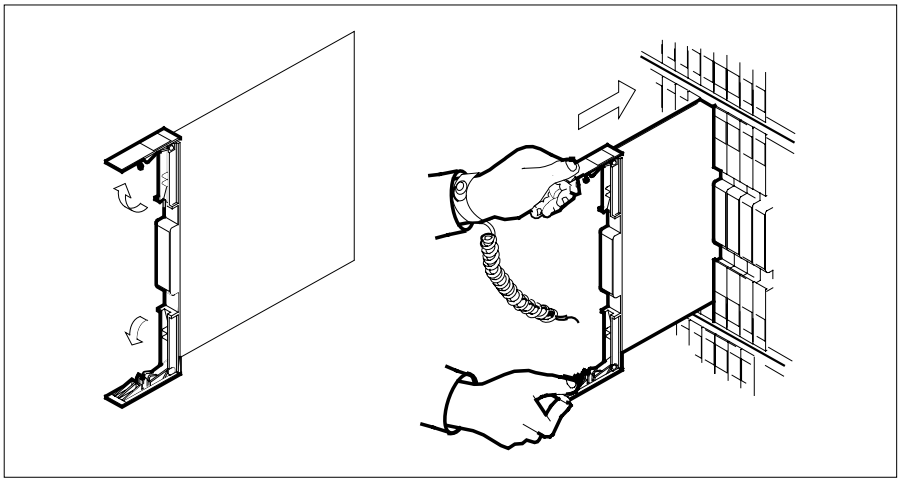

9 Seat and lock the card.

a Using your fingers or thumbs, push on the upper and lower edges of the faceplate to ensure the card is fully seated in the shelf.

b Close the locking levers.

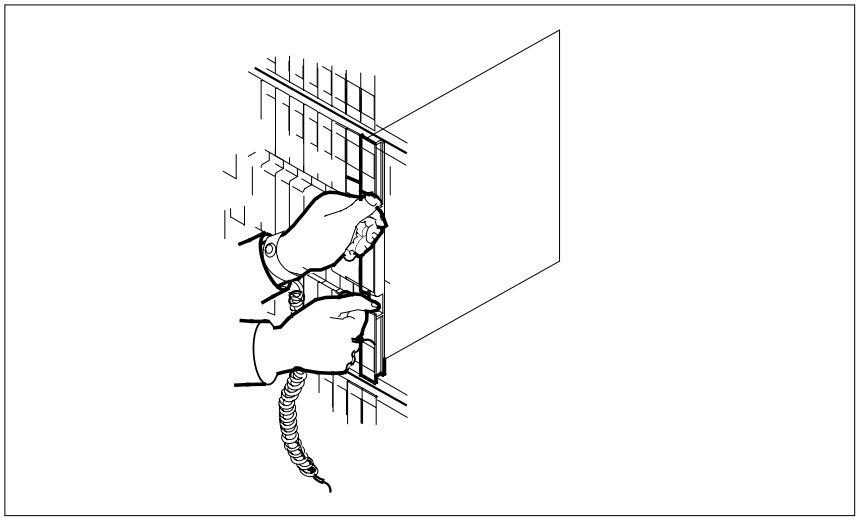

NT2X06
in an RSC RMM (continued)

10 Use the following information to determine the next step in this procedure.

If you entered this procedure from	Do
an alarm clearing procedure	step 20
other	step 11

At the RMM shelf

11 Power up the RMM as follows:

a Ensure the converter (NT2X06) is inserted. A major audible alarm may sound. This alarm is silenced when power is restored to the converter.

b Set the POWER switch to the ON position.

If FSP is equipped with	Do
fuses	step 12
circuit breakers	step 13

12 Press and hold the RESET button for one second. Both the converter FAIL LED and FRAME FAIL lamp on the frame supervisory panel (FSP) will be OFF. Go to step 14.

At the MAP display

13 Press the RESET button while setting the circuit breaker to the ON position. Both the converter FAIL LED and FRAME FAIL lamp on the frame supervisory panel (FSP) will be ON.

14 Reload the RMM by typing

>LOADPM

and pressing the Enter key.

If load	Do
passed	step 15
failed	step 21

15 Test the RMM by typing

>TST

and pressing the Enter key.

Example of a MAP response:

```
Test Passed
```

or

```
Test Failed
```

If the TST	Do
passed	step 16
failed	step 20

16 Return the RMM to service by typing

>RTS

and pressing the Enter key.

If the RTS	Do
passed	step 17
failed	step 21

17 Send any faulty cards for repair according to local procedure.

18 Record the following items in office records:

- date the card was replaced
- serial number of the card
- symptoms that prompted replacement of the card

19 Go to step 22.

20 Return to the *Alarm Clearing Procedure* that directed you to this card replacement procedure. If necessary, go to the point where the faulty card list was produced, identify the next faulty card on the list, and go to the appropriate replacement procedure in this manual for that card.

21 Obtain further assistance in replacing this card by contacting personnel responsible for higher level of support.

22 You have successfully completed this procedure. Return to the maintenance procedure that directed you to this card replacement procedure and continue as directed.

NT2X06 in an RSC-S (DS-1) Model A RMM

Application

Use this procedure to replace an NT2X06 card in an RSC-S RMM.

PEC	Suffixes	Name
NT2X06	AB	5V/40A Power Converter

Common procedures

None

Action

The following flowchart is only a summary of the procedure. To replace the card, use the instructions in the procedure that follows the flowchart.

NT2X06
in an RSC-S (DS-1) Model A RMM (continued)

Summary of card replacement procedure for an NT2X06 card in RSC-S RMM

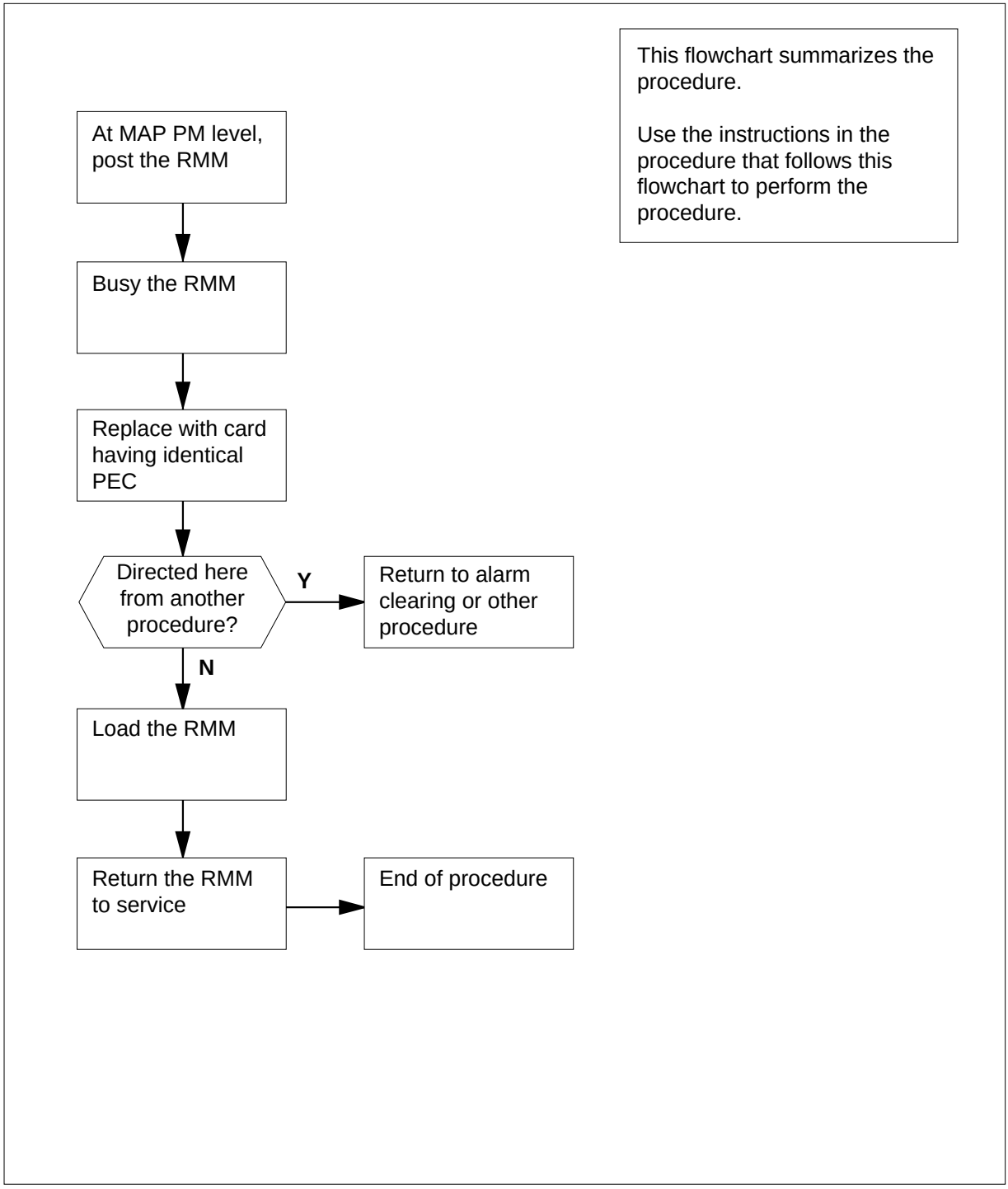

NT2X06 in an RSC-S (DS-1) Model A RMM (continued)

Replacing an NT2X06 card in RSC-S RMM

At your Current Location

1 Proceed only if you have been directed to this card replacement procedure from a step in a maintenance procedure, are using the procedure for verifying or accepting cards, or have been directed to this procedure by your maintenance support group.

2 Obtain an NT2X06 replacement card. Ensure the replacement card has the same product equipment code (PEC), including suffix, as the card to be removed.

At the MAP terminal

3 Set the MAP display to PM level and post the RMM by typing

>MAPCI;MTC;PM;POST RMM rmm_no

and pressing the Enter key.

where

rmm_no
is the number of the RMM where the card is to be removed

Example of a MAP display:

```
 CM     MS    IOD    Net    PM    CCS    LNS     Trks     Ext    Appl
  .      .      .      .     .      .      .       .        .       .

RMM               SysB     ManB     OffL     CBsy     ISTb      InSv
 0 Quit    PM        4        0       10        3        3       130
 2 Post_   RMM       0        1        1        0        0         2
 3
 4         RMM  5  INSV
 5 Trnsl
 6 Tst
 7 Bsy
 8 RTS
 9 OffL
10 LoadPM
11 Disp_
12 Next
13
14 QueryPM
15
16
17
18
```

4 Busy the RMM by typing

>BSY

and pressing the Enter key.

Example of a MAP display:

NT2X06
in an RSC-S (DS-1) Model A RMM (continued)

```
 CM     MS     IOD     Net    PM     CCS    LNS    Trks    Ext    Appl
 .      .       .       .   1ManB    .      .      .       .       .

RMM               SysB     ManB     OffL     CBsy     ISTb      InSv
 0 Quit    PM        4        0       10        0        0       130
 2 Post_   RMM       0        1        0        0        0         0
 3
 4         RMM  5  ManB
 5 Trnsl
 6 Tst
 7 Bsy
 8 RTS
 9 OffL
10 LoadPM
11 Disp_
12 Next
13
14 QueryPM
15
16
17
18
```

At the RMM shelf

5

CAUTION
Static discharge may cause damage to circuit packs
Put on a wrist strap and connect it to the frame of the RMM before removing any cards. This protects the RMM against service degradation caused by static electricity.

Put on a wrist strap.

6 Power down the unit by setting the ON/OFF switch on the power converter faceplate to the OFF position. Both the converter FAIL LED and FRAME FAIL lamp on the frame supervisory panel (FSP) will be ON. An audible alarm may sound. If an alarm does sound, return to the MAP terminal and silence the alarm by typing

>sil

and pressing the Enter key.

7 Remove the NT2X06 card as shown in the following figures.

a Locate the card to be removed on the appropriate shelf.

NT2X06
in an RSC-S (DS-1) Model A RMM (continued)

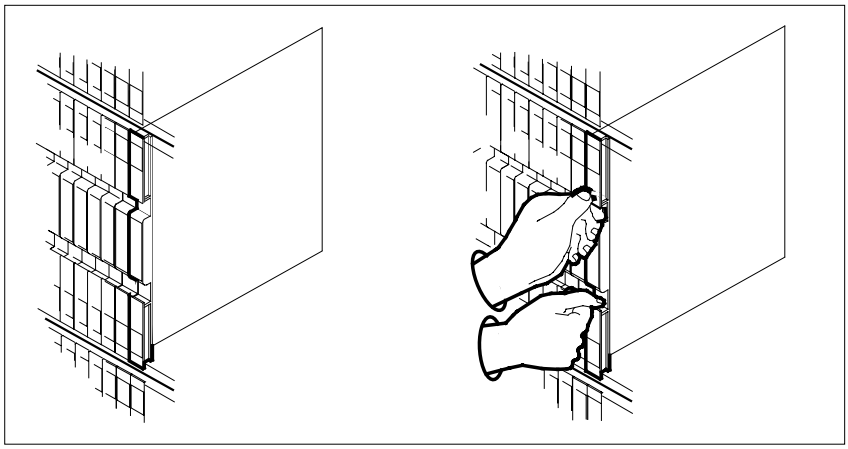

b Open the locking levers on the card to be replaced and gently pull the card toward you until it clears the shelf.

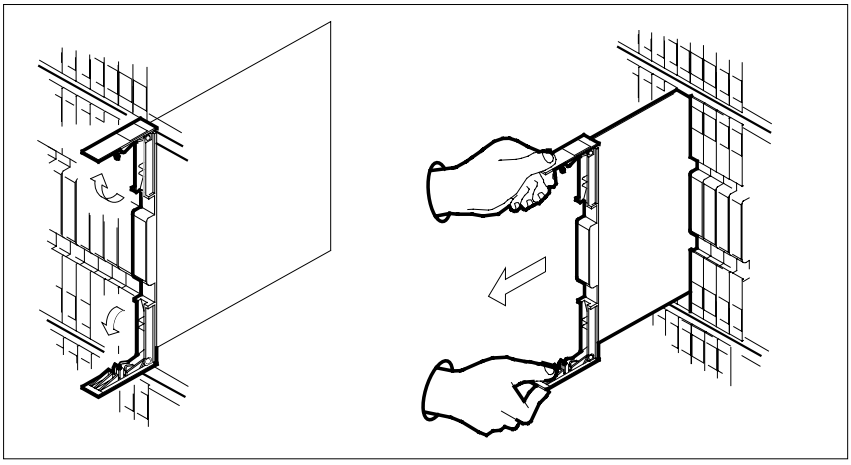

c Ensure the replacement card has the same PEC, including suffix, as the card you just removed.

8 Open the locking levers on the replacement card.

a Align the card with the slots in the shelf.

b Gently slide the card into the shelf.

NT2X06
in an RSC-S (DS-1) Model A RMM (continued)

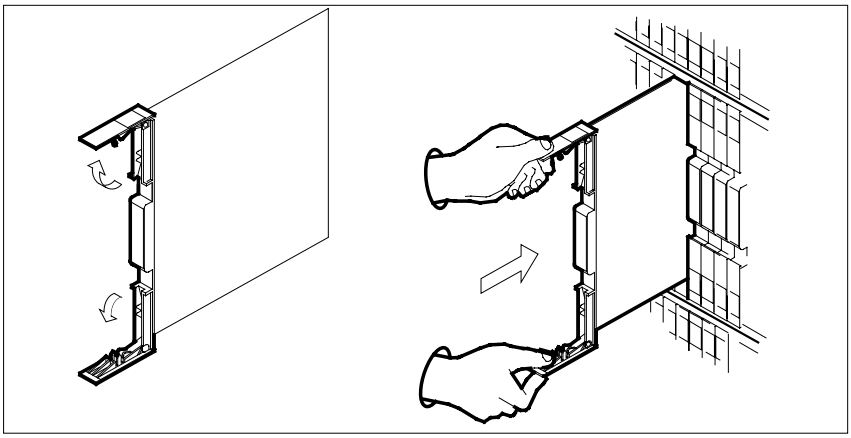

9

DANGER
Equipment damage
Take these precautions when removing or inserting a card:

1. Do not apply direct pressure to the components.
2. Do not force the card into its slot.

Seat and lock the card.

a Using your fingers or thumbs, push on the upper and lower edges of the faceplate to ensure that the card is fully seated in the shelf.

b Close the locking levers.

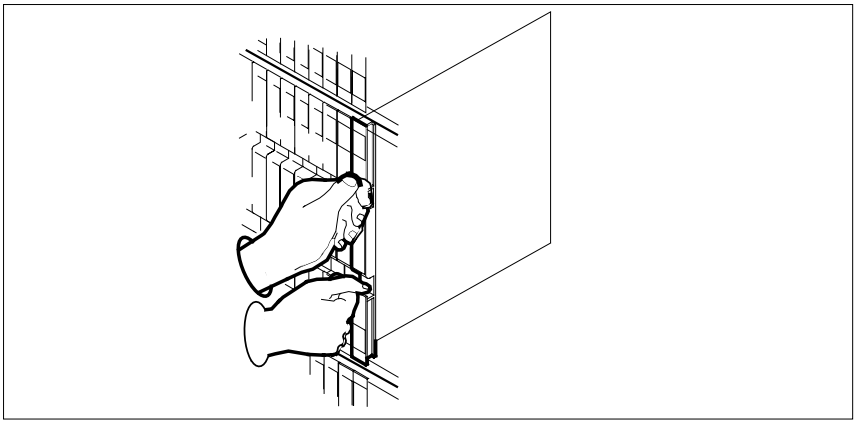

NT2X06
in an RSC-S (DS-1) Model A RMM (continued)

10 Use the following information to determine where to proceed.

If you entered this procedure from	Do
alarm clearing procedures	step 23
other	step 11

At the RMM shelf

11 Power up the RMM as follows:

a Ensure the converter (NT2X06) is inserted. A major audible alarm may sound. This alarm is silenced when power is restored to the converter.

b Set the POWER switch to the ON position.

If FSP is equipped with	Do
fuses	step 12
circuit breakers	step 13

12 Press and hold the RESET button for 1 s. Both the converter FAIL LED and FRAME FAIL lamp on the FSP will be OFF.

Go to step 14.

13 Press the RESET button while setting the circuit breaker to the ON position. Both the converter FAIL LED and FRAME FAIL lamp on the FSP will be ON.

Go to step 14.

At the MAP terminal

14 Reload the RMM by typing

`>LOADPM`

and pressing the Enter key.

If	Do
message `loadfile not found in directory` is received	step 15
load passes	step 19
load fails	step 24

NT2X06
in an RSC-S (DS-1) Model A RMM (continued)

15 Use the following information to determine where to proceed.

If system load module	Do
version 1	step 16
version 2	step 17

16 List the loadfile in the directory by typing

>DSKUT;LISTVOL D000 file_name ALL

and pressing the Enter key.

or

> *dskut;listvol d010* file_name *all*

and pressing the Enter key.

where

file_name
is the name of the loadfile

Local operating company policy determines where disk D000 or D010 is located.

Proceed to step 18.

17 List the loadfile in the directory by typing

>DISKUT;LV S00D

and pressing the Enter key.

>LF S00D file_name

and pressing the Enter key.

or

>DISKUT;LV S01D

and pressing the Enter key.

>LF S01D file_name

and pressing the Enter key.

where

file_name
is the name of the loadfile

18 Leave the disk utility by typing

>QUIT

and pressing the Enter key.

Return to step 14.

19 Test the RMM by typing

>TST

NT2X06 in an RSC-S (DS-1) Model A RMM (end)

and pressing the Enter key.

If TST	Do
passed	step 20
failed	step 23

20 Return the RMM to service by typing

>RTS

and pressing the Enter key.

If RTS	Do
passed	step 21
failed	step 24

21 Send any faulty cards for repair according to local procedure.

22 Record the date the card was replaced, the serial number of the card, and the symptoms prompted by replacement of the card. Go to step 25.

23 Return to the procedure that directed you to this procedure. At the point where a faulty card list was produced, identify the next faulty card on the list and go to the appropriate card replacement procedure for that card in this manual.

24 Obtain further assistance in replacing this card by contacting operating company maintenance personnel.

25 You have successfully completed this procedure. Return to the maintenance procedure that directed you to this card replacement procedure and continue as directed.

NT2X06 in an RSC-S (DS-1) Model B RMM

Application

Use this procedure to replace an NT2X06 card in an RSC-S RMM.

PEC	Suffixes	Name
NT2X06	AB	5V/40A Power Converter

Common procedures

None

Action

The following flowchart is only a summary of the procedure. To replace the card, use the instructions in the procedure that follows the flowchart.

NT2X06 in an RSC-S (DS-1) Model B RMM (continued)

Summary of card replacement procedure for an NT2X06 card in RSC-S RMM

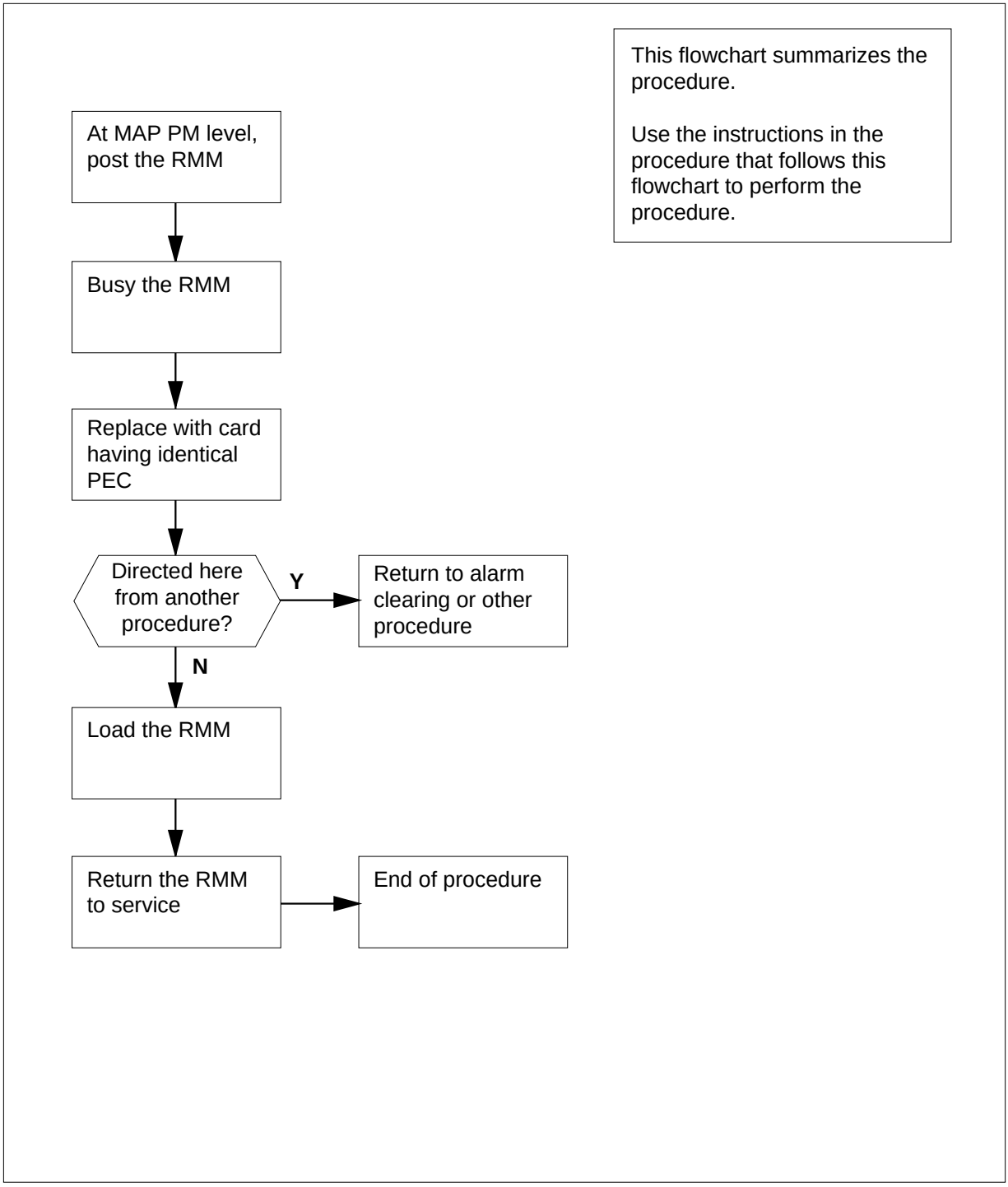

NT2X06 in an RSC-S (DS-1) Model B RMM (continued)

Replacing an NT2X06 card in RSC-S RMM

At your Current Location

1 Proceed only if you have been directed to this card replacement procedure from a step in a maintenance procedure, are using the procedure for verifying or accepting cards, or have been directed to this procedure by your maintenance support group.

2 Obtain an NT2X06 replacement card. Ensure the replacement card has the same product equipment code (PEC), including suffix, as the card to be removed.

At the MAP terminal

3 Set the MAP display to PM level and post the RMM by typing

>MAPCI;MTC;PM;POST RMM rmm_no

and pressing the Enter key.

where

rmm_no
is the number of the RMM where the card is to be removed

Example of a MAP display:

```
   CM    MS    IOD    Net    PM    CCS    LNS    Trks    Ext    Appl
    .     .     .      .      .     .      .      .       .      .

RMM               SysB     ManB     OffL     CBsy     ISTb      InSv
 0 Quit    PM        4        0       10        3        3       130
 2 Post_   RMM       0        1        1        0        0         2
 3
 4         RMM  5  INSV
 5 Trnsl
 6 Tst
 7 Bsy
 8 RTS
 9 OffL
10 LoadPM
11 Disp_
12 Next
13
14 QueryPM
15
16
17
18
```

4 Busy the RMM by typing

>BSY

and pressing the Enter key.

Example of a MAP display:

NT2X06 in an RSC-S (DS-1) Model B RMM (continued)

```
   CM     MS     IOD     Net     PM      CCS     LNS     Trks     Ext     Appl
    .      .      .       .     1ManB     .       .        .       .       .

RMM                SysB      ManB      OffL      CBsy      ISTb       InSv
 0 Quit     PM        4         0        10         0         0        130
 2 Post_    RMM       0         1         0         0         0          0
 3
 4          RMM  5  ManB
 5 Trnsl
 6 Tst
 7 Bsy
 8 RTS
 9 OffL
10 LoadPM
11 Disp_
12 Next
13
14 QueryPM
15
16
17
18
```

At the RMM shelf

5

CAUTION
Static discharge may cause damage to circuit packs
Put on a wrist strap and connect it to the frame of the RMM before removing any cards. This protects the RMM against service degradation caused by static electricity.

Put on a wrist strap.

6 Power down the unit by setting the ON/OFF switch on the power converter faceplate to the OFF position. Both the converter FAIL LED and FRAME FAIL lamp on the modular supervisory panel (MSP) will be ON. An audible alarm may sound. If an alarm does sound, return to the MAP terminal and silence the alarm by typing

>sil

and pressing the Enter key.

7 Remove the NT2X06 card as shown in the following figures.

a Locate the card to be removed on the appropriate shelf.

NT2X06
in an RSC-S (DS-1) Model B RMM (continued)

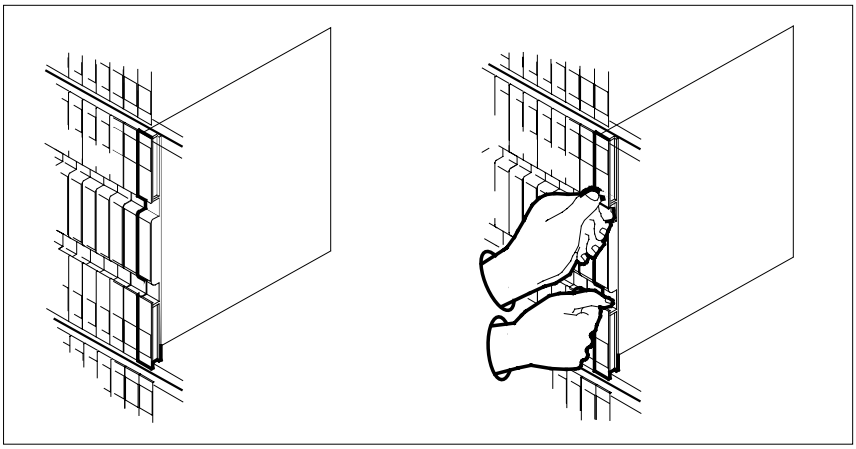

b Open the locking levers on the card to be replaced and gently pull the card toward you until it clears the shelf.

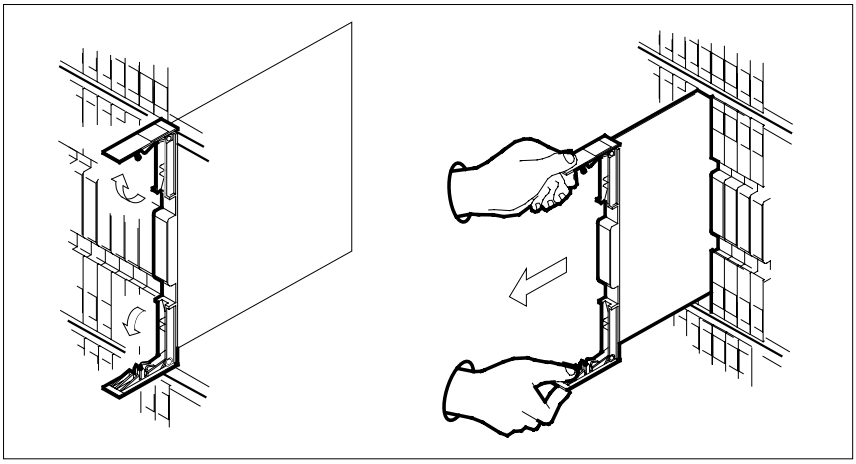

c Ensure the replacement card has the same PEC, including suffix, as the card you just removed.

8 Open the locking levers on the replacement card.

a Align the card with the slots in the shelf.

b Gently slide the card into the shelf.

NT2X06
in an RSC-S (DS-1) Model B RMM (continued)

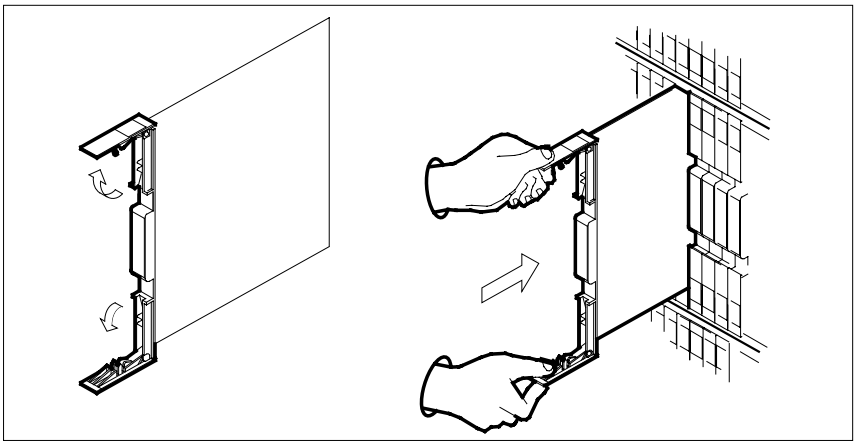

9

DANGER
Equipment damage
Take these precautions when removing or inserting a card:

1. Do not apply direct pressure to the components.
2. Do not force the card into its slot.

Seat and lock the card.

a Using your fingers or thumbs, push on the upper and lower edges of the faceplate to ensure that the card is fully seated in the shelf.

b Close the locking levers.

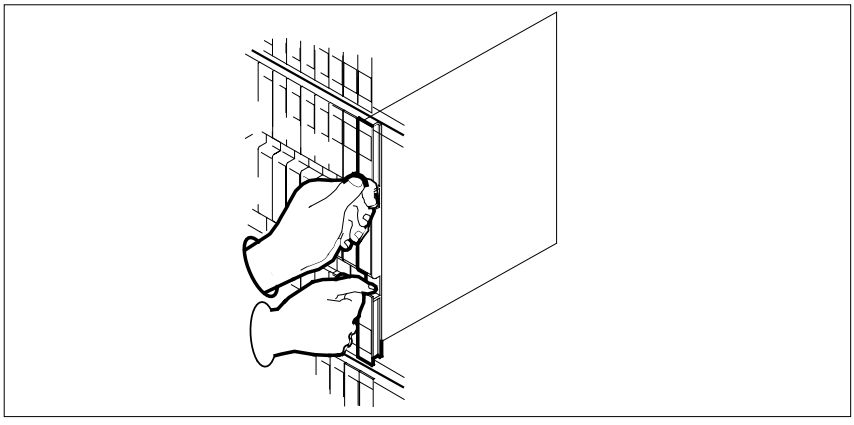

10 Use the following information to determine where to proceed.

If you entered this procedure from	Do
alarm clearing procedures	step 23
other	step 11

At the RMM shelf

11 Power up the RMM as follows:

a Ensure the converter (NT2X06) is inserted. A major audible alarm may sound. This alarm is silenced when power is restored to the converter.

b Set the POWER switch to the ON position.

If MSP is equipped with	Do
fuses	step 12
circuit breakers	step 13

12 Press and hold the RESET button for 1 s. Both the converter FAIL LED and FRAME FAIL lamp on the MSP will be OFF.

Go to step 14.

13 Press the RESET button while setting the circuit breaker to the ON position. Both the converter FAIL LED and FRAME FAIL lamp on the MSP will be ON.

Go to step 14.

At the MAP terminal

14 Reload the RMM by typing

`>LOADPM`

and pressing the Enter key.

If	Do
message `loadfile not found in directory` is received	step 15
load passes	step 19
load fails	step 24

NT2X06
in an RSC-S (DS-1) Model B RMM (continued)

15 Use the following information to determine where to proceed.

If system load module	Do
version 1	step 16
version 2	step 17

16 List the loadfile in the directory by typing

>DSKUT;LISTVOL D000 file_name ALL

and pressing the Enter key.

or

> *dskut;listvol d010* file_name *all*

and pressing the Enter key.

where

file_name
is the name of the loadfile

Local operating company policy determines where disk D000 or D010 is located.

Proceed to step 18.

17 List the loadfile in the directory by typing

>DISKUT;LV S00D

and pressing the Enter key.

>LF S00D file_name

and pressing the Enter key.

or

>DISKUT;LV S01D

and pressing the Enter key.

>LF S01D file_name

and pressing the Enter key.

where

file_name
is the name of the loadfile

18 Leave the disk utility by typing

>QUIT

and pressing the Enter key.

Return to step 14.

19 Test the RMM by typing

>TST

NT2X06 in an RSC-S (DS-1) Model B RMM (end)

and pressing the Enter key.

If TST	Do
passed	step 20
failed	step 23

20 Return the RMM to service by typing

>RTS

and pressing the Enter key.

If RTS	Do
passed	step 21
failed	step 24

21 Send any faulty cards for repair according to local procedure.

22 Record the date the card was replaced, the serial number of the card, and the symptoms prompted by replacement of the card. Go to step 25.

23 Return to the procedure that directed you to this procedure. At the point where a faulty card list was produced, identify the next faulty card on the list and go to the appropriate card replacement procedure for that card in this manual.

24 Obtain further assistance in replacing this card by contacting operating company maintenance personnel.

25 You have successfully completed this procedure. Return to the maintenance procedure that directed you to this card replacement procedure and continue as directed.

NT2X06 in an RSC-S (PCM-30) Model A RMM

Application

Use this procedure to replace an NT2X06 card in an RSC-S RMM.

PEC	Suffixes	Name
NT2X06	AB	5V/40A Power Converter

Common procedures

None

Action

The following flowchart is only a summary of the procedure. To replace the card, use the instructions in the procedure that follows the flowchart.

NT2X06
in an RSC-S (PCM-30) Model A RMM (continued)

Summary of card replacement procedure for an NT2X06 card in RSC-S RMM

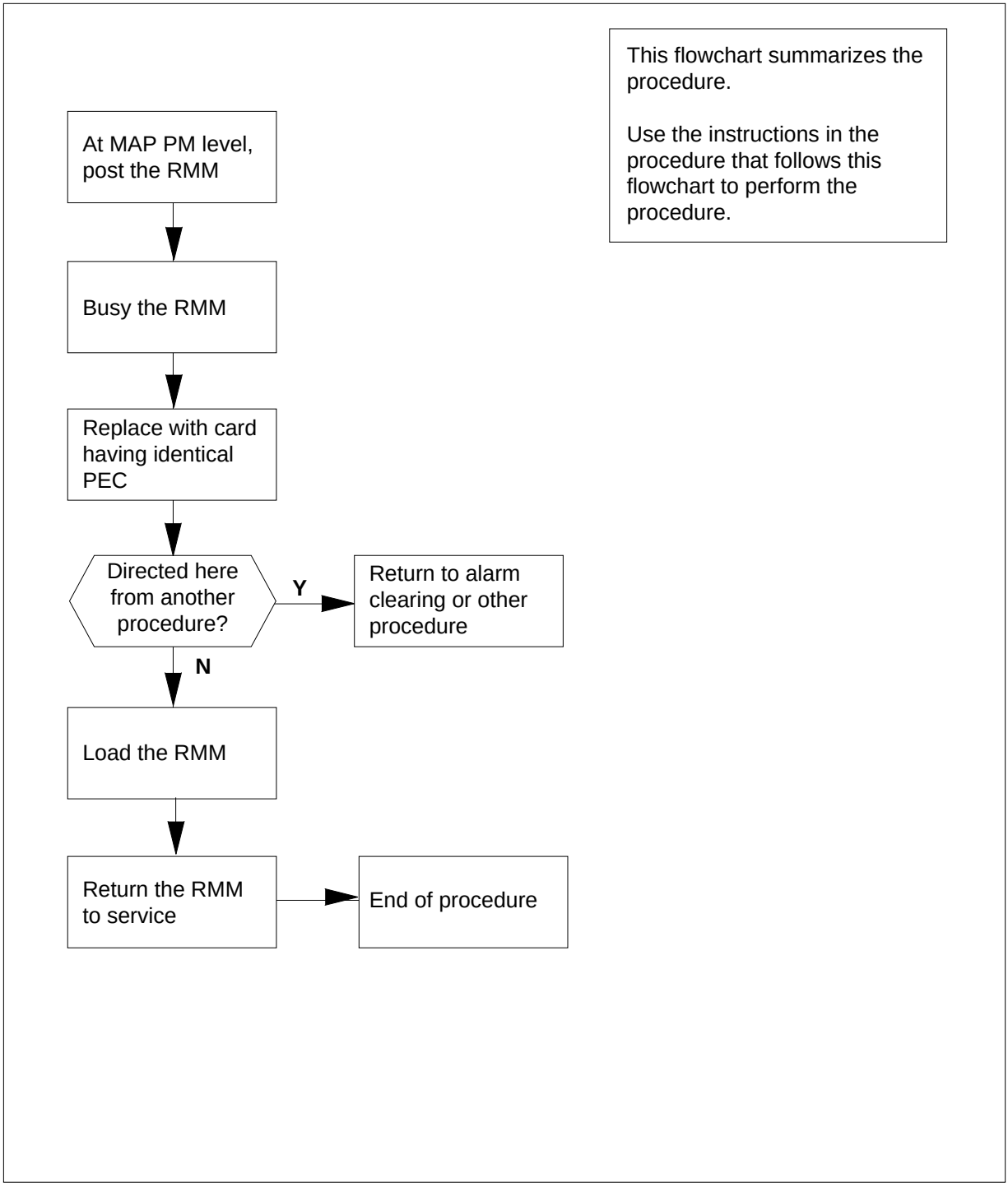

NT2X06 in an RSC-S (PCM-30) Model A RMM (continued)

Replacing an NT2X06 card in RSC-S RMM

1 Proceed only if you have been directed to this card replacement procedure from a step in a maintenance procedure, are using the procedure for verifying or accepting cards, or have been directed to this procedure by your maintenance support group.

2 Obtain an NT2X06 replacement card. Ensure the replacement card has the same product equipment code (PEC), including suffix, as the card to be removed.

At the MAP terminal

3 Set the MAP display to PM level and post the RMM by typing

>MAPCI;MTC;PM;POST RMM rmm_no

and pressing the Enter key.

where

rmm_no
is the number of the RMM where the card is to be removed

Example of a MAP display:

```
 CM     MS    IOD    Net    PM    CCS    LNS      Trks      Ext    Appl
  .      .      .      .     .      .      .         .         .       .
RMM              SysB     ManB     OffL     CBsy     ISTb      InSv
 0 Quit    PM       4        0       10        3        3       130
 2 Post_   RMM      0        1        1        0        0         2
 3
 4         RMM  5  INSV
 5 Trnsl
 6 Tst
 7 Bsy
 8 RTS
 9 OffL
10 LoadPM
11 Disp_
12 Next
13
14 QueryPM
15
16
17
18
```

4 Busy the RMM by typing

>BSY

and pressing the Enter key.

Example of a MAP display:

NT2X06
in an RSC-S (PCM-30) Model A RMM (continued)

```
 CM     MS     IOD     Net    PM     CCS    LNS    Trks     Ext    Appl
 .      .       .       .     1ManB   .      .       .       .       .
RMM              SysB     ManB     OffL     CBsy     ISTb      InSv
 0 Quit    PM        4        0       10        0        0       130
 2 Post_   RMM       0        1        0        0        0         0
 3
 4         RMM  5  ManB
 5 Trnsl
 6 Tst
 7 Bsy
 8 RTS
 9 OffL
10 LoadPM
11 Disp_
12 Next
13
14 QueryPM
15
16
17
18
```

At the RMM shelf

5

CAUTION
Static discharge may cause damage to circuit packs
Put on a wrist strap and connect it to the frame of the RMM before removing any cards. This protects the RMM against service degradation caused by static electricity.

Put on a wrist strap.

6 Power down the unit by setting the ON/OFF switch on the power converter faceplate to the OFF position. Both the converter FAIL LED and FRAME FAIL lamp on the frame supervisory panel (FSP) will be ON. An audible alarm may sound. If an alarm does sound, return to the MAP terminal and silence the alarm by typing

>sil

and pressing the Enter key.

7 Remove the NT2X06 card as shown in the following figures.

a Locate the card to be removed on the appropriate shelf.

NT2X06
in an RSC-S (PCM-30) Model A RMM (continued)

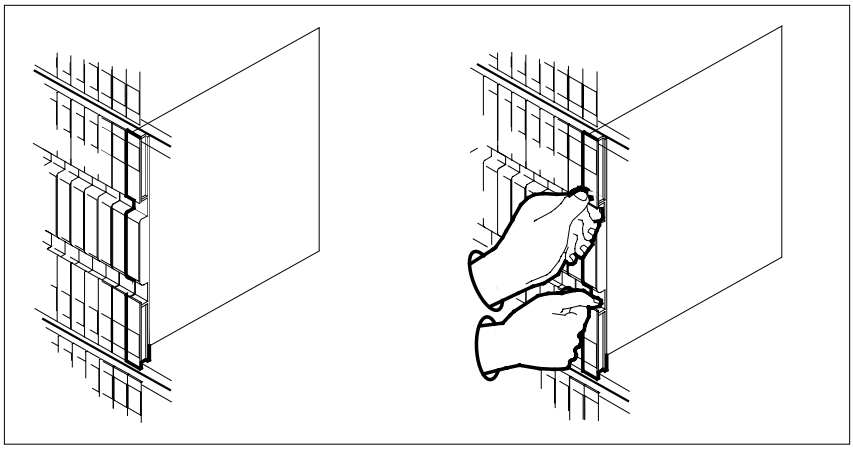

b Open the locking levers on the card to be replaced and gently pull the card toward you until it clears the shelf.

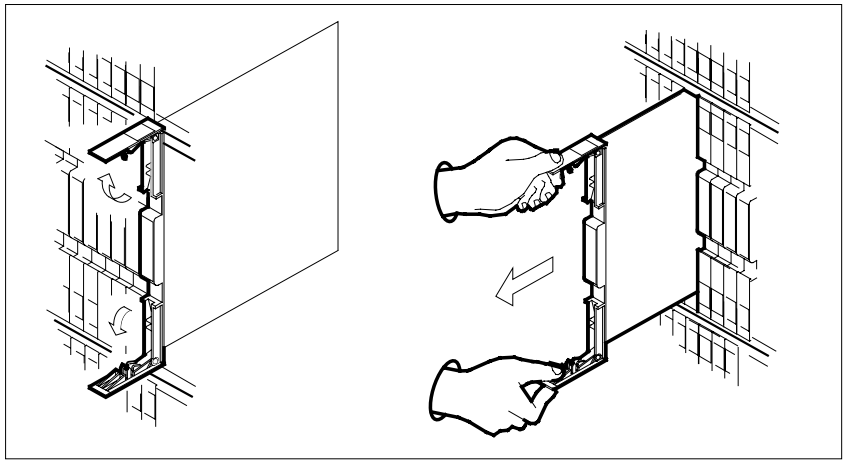

c Ensure the replacement card has the same PEC, including suffix, as the card you just removed.

8 Open the locking levers on the replacement card.

a Align the card with the slots in the shelf.

b Gently slide the card into the shelf.

NT2X06
in an RSC-S (PCM-30) Model A RMM (continued)

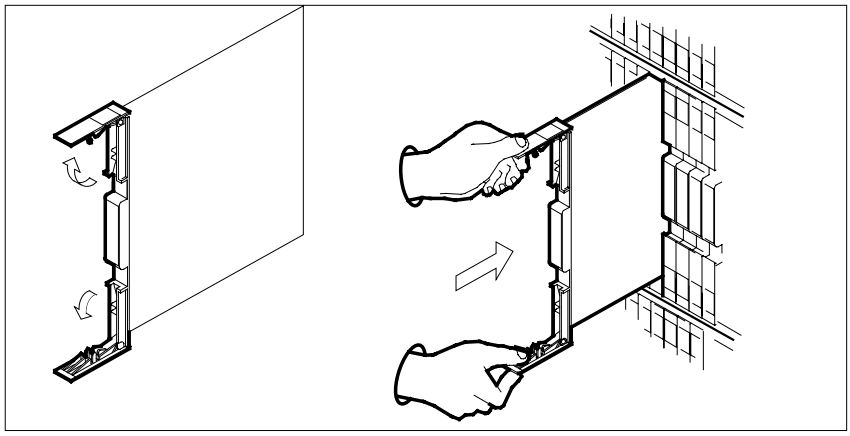

9

DANGER
Equipment damage
Take these precautions when removing or inserting a card:

1. Do not apply direct pressure to the components.
2. Do not force the card into its slot.

Seat and lock the card.

a Using your fingers or thumbs, push on the upper and lower edges of the faceplate to ensure that the card is fully seated in the shelf.

b Close the locking levers.

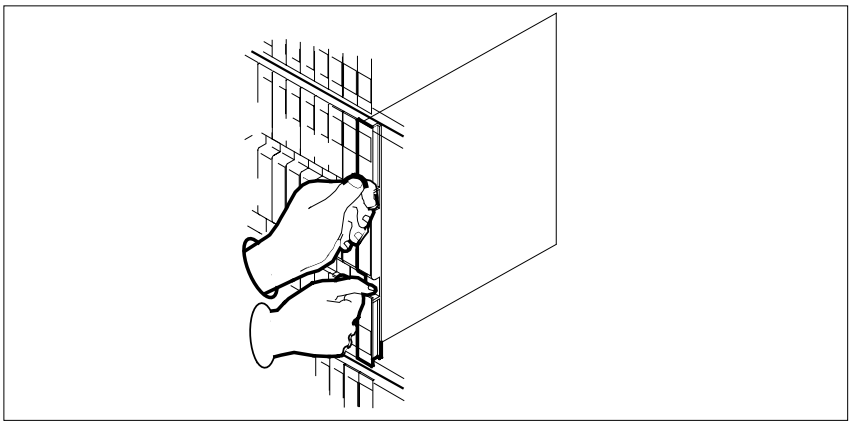

NT2X06
in an RSC-S (PCM-30) Model A RMM (continued)

10 Use the following information to determine where to proceed.

If you entered this procedure from	Do
alarm clearing procedures	step 23
other	step 11

At the RMM shelf

11 Power up the RMM as follows:

a Ensure the converter (NT2X06) is inserted. A major audible alarm may sound. This alarm is silenced when power is restored to the converter.

b Set the POWER switch to the ON position.

If FSP is equipped with	Do
fuses	step 12
circuit breakers	step 13

12 Press and hold the RESET button for 1 s. Both the converter FAIL LED and FRAME FAIL lamp on the FSP will be OFF.

Go to step 14.

13 Press the RESET button while setting the circuit breaker to the ON position. Both the converter FAIL LED and FRAME FAIL lamp on the FSP will be ON.

Go to step 14.

At the MAP terminal

14 Reload the RMM by typing

`>LOADPM`

and pressing the Enter key.

If	Do
message `loadfile not found in directory` is received	step 15
load passes	step 19
load fails	step 24

NT2X06
in an RSC-S (PCM-30) Model A RMM (continued)

15 Use the following information to determine where to proceed.

If system load module	Do
version 1	step 16
version 2	step 17

16 List the loadfile in the directory by typing

>DSKUT;LISTVOL D000 file_name ALL

and pressing the Enter key.

or

> *dskut;listvol d010* file_name *all*

and pressing the Enter key.

where

file_name
is the name of the loadfile

Local operating company policy determines where disk D000 or D010 is located.

Proceed to step 18.

17 List the loadfile in the directory by typing

>DISKUT;LV S00D

and pressing the Enter key.

>LF S00D file_name

and pressing the Enter key.

or

>DISKUT;LV S01D

and pressing the Enter key.

>LF S01D file_name

and pressing the Enter key.

where

file_name
is the name of the loadfile

18 Leave the disk utility by typing

>QUIT

and pressing the Enter key.

Return to step 14.

19 Test the RMM by typing

>TST

NT2X06 in an RSC-S (PCM-30) Model A RMM (end)

and pressing the Enter key.

If TST	Do
passed	step 20
failed	step 23

20 Return the RMM to service by typing

>RTS

and pressing the Enter key.

If RTS	Do
passed	step 21
failed	step 24

21 Send any faulty cards for repair according to local procedure.

22 Record the date the card was replaced, the serial number of the card, and the symptoms prompted by replacement of the card. Go to step 25.

23 Return to the procedure that directed you to this procedure. At the point where a faulty card list was produced, identify the next faulty card on the list and go to the appropriate card replacement procedure for that card in this manual.

24 Obtain further assistance in replacing this card by contacting operating company maintenance personnel.

25 You have successfully completed this procedure. Return to the maintenance procedure that directed you to this card replacement procedure and continue as directed.

NT2X09 in an IOPAC RMM

Application

Use this procedure to replace the following card in a remote maintenance module (RMM).

PEC	Suffix	Name
NT2X09	AA	Multioutput power converter

Common procedures

The replacing a card procedure is referenced in this procedure.

Action

The following flowchart is only a summary of the procedure. To replace the card, use the instructions in the step-action procedure that follows the flowchart.

NT2X09
in an IOPAC RMM (continued)

Summary of card replacement procedure for an NT2X09 in an RMM

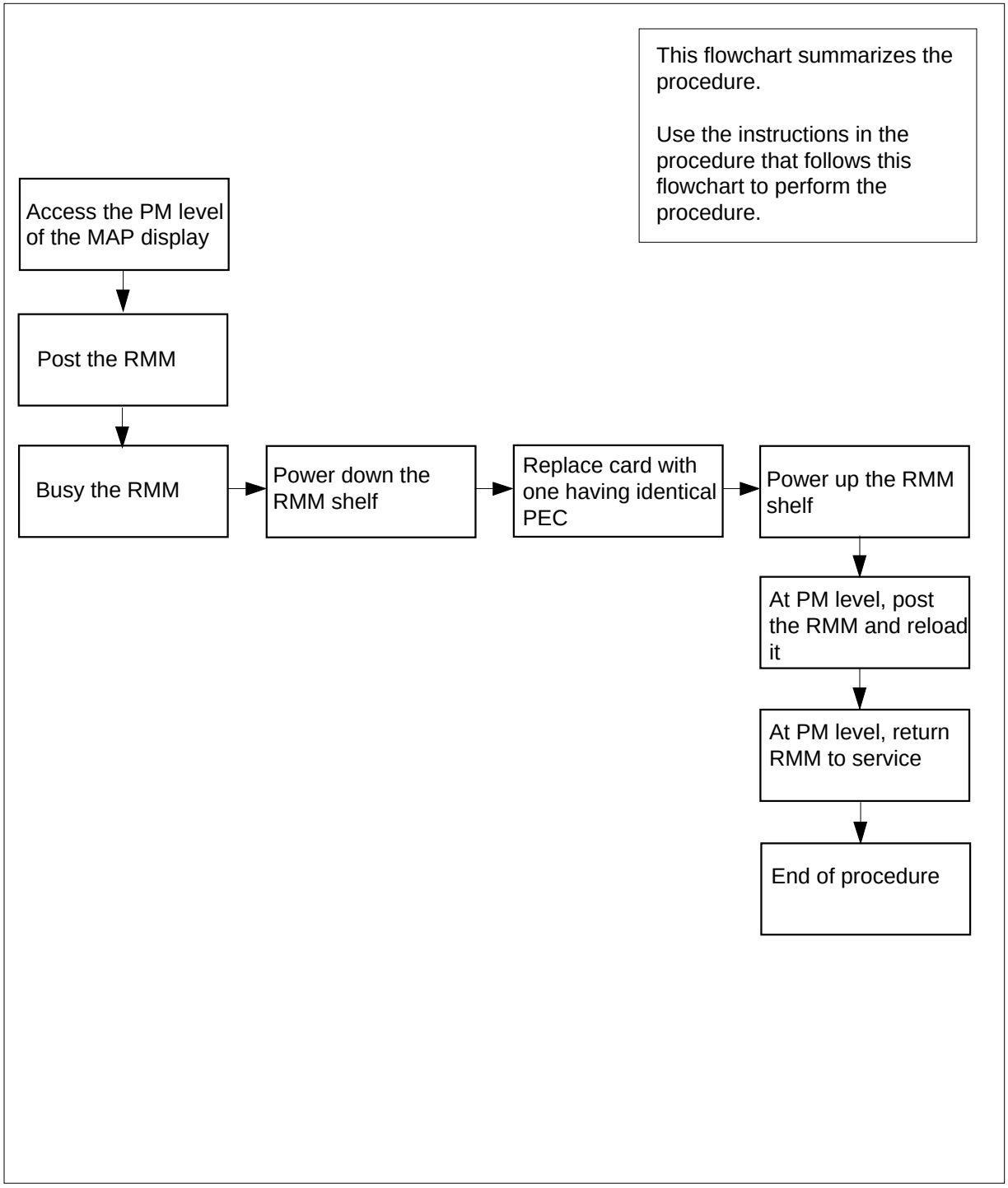

NT2X09 in an IOPAC RMM (continued)

Replacing an NT2X09 in an RMM

At your Current Location

1 Obtain a replacement card. Ensure the replacement card has the same product equipment code (PEC), including suffix, as the card to be removed.

2 If you were directed to this procedure from the *Alarm Clearing Procedures*, go to step 6. Otherwise, continue with step 3.

At the MAP terminal

3 Access the peripheral module (PM) level of the MAP display by typing

>MAPCI;MTC;PM

and pressing the Enter key.

4 Post the RMM by typing

>POST RMM rmm_no

and pressing the Enter key.

where

rmm_no
is the number of the RMM shelf where the card is to be replaced

Example of a MAP response:

```
          SysB      ManB      Offl      CBsy      ISTb     InSv
PM           1         2         2         0         7       21
RMM          1         0         1         0         0        6

RMM      0     SysB
```

5 Busy the RMM by typing

>BSY

and pressing the Enter key.

NT2X09 in an IOPAC RMM (continued)

At the RMM

6

DANGER
Static electricity damage
Wear a wrist strap connected to the wrist strap grounding point at the top of each equipment rack, (Bay 0, 1, 2, and 3), while handling circuit cards. This protects the cards against damage caused by static electricity.

Power down the unit by setting the ON/OFF switch on the power converter faceplate to the OFF position. Both the converter FAIL LED and FRAME FAIL lamp on the MSP will be ON.

7 Replace the NT2X09 card using the common replacing a card procedure in this document. When you have completed the procedure, return here.

8 Power up the RMM unit as follows:

Ensure the converter (NT2X09) is inserted. Set the POWER switch to the ON position.

9 Press the RESET button on the power converter while setting the circuit breaker on the MSP to the ON position. Both the CONVERTER FAIL LED and FRAME FAIL lamp on the MSP will be ON.

10 If you were directed to this procedure from the *Alarm Clearing Procedures*, return to the alarm clearing procedure that directed you here. Otherwise, continue with step 11.

At the MAP terminal

11 Go to the PM level and post the RMM, if not already posted, and load the RMM by typing

`>PM;POST rmm_no;LOADPM`

and pressing the Enter key.

where

rmm_no
is the number of the RMM shelf in which the card is to be replaced

If	Do
message `loadfile not found in directory` is received	step12
load passed	step29
load failed	step32

12 Determine the type of device where the RMM load files are located.

If load files are located on	Do
tape	step13
IOC disk	step19
SLM disk	step24

13 Locate the tape that contains the PM load files.

14 Mount the tape on a magnetic tape drive.

At the MAP terminal

15 Download the tape by typing

`>MOUNT tape_no`

and pressing the Enter key.

where

tape_no
is the number of the tape containing the PM load files

16 List the contents of the tape in your user directory by typing

`>LIST T tape_no`

and pressing the Enter key.

where

tape_no
is the number of the tape containing the PM load files

17 Demount the tape drive by typing

`>DEMOUNT T tape_no`

and pressing the Enter key.

where

tape_no
is the number of the tape drive containing the PM load files

18 Go to step 28.

19 From office records, determine and note the number of the input/output controller (IOC) disk and the number of the volume that contains the PM load files.

20 Access the disk utility level of the MAP display by typing

`>DSKUT`

and pressing the Enter key.

21 List the IOC file names into your user directory by typing

`>LISTVOL volume_name`

NT2X09
in an IOPAC RMM (continued)

and pressing the Enter key.

where

volume_name
is the name of the volume that contains the PM load files obtained in step 19.

22 Leave the disk utility by typing

```
>QUIT
```

and pressing the Enter key.

23 Go to step 28.

24 From office records, determine and note the number of the system load module (SLM) disk and the number of the volume that contains the PM load files.

25 Access the disk utility level of the MAP display by typing

```
>DISKUT
```

and pressing the Enter key.

26 List the SLM file names into your user directory by typing

```
>LV CM;LF file_name
```

and pressing the Enter key.

where

file_name
is the name of the SLM disk volume containing the PM load file obtained in step 24.

27 Leave the disk utility by typing

```
>QUIT
```

and pressing the Enter key.

28 Reload the RMM by typing

```
>LOADPM
```

and pressing the Enter key.

If	Do
load failed	step 32
load passed	step 29

29 Return the RMM to service by typing

```
>RTS
```

and pressing the Enter key.

If RTS	Do
passes	step 33
fails	step 32

30 Send any faulty cards for repair according to local procedure.

31 Record the following items in office records:

- date the card was replaced
- serial number of the card
- symptoms that prompted replacement of the card

Go to step 33.

32 Obtain further assistance in replacing this card by contacting the personnel responsible for higher level of support.

33 You have completed this procedure.

NT2X09 in an OPM RMM

Application

Use this procedure to replace the following card in an RMM.

PEC	Suffixes	Name
NT2X09	AA, AB	Multioutput Power Converter (5V/40A)

Common procedures

The replacing a card procedure is referenced in this procedure.

Action

The following flowchart is a summary of the procedure. To replace the card, use the instructions in the procedure that follows the flowchart.

NT2X09
in an OPM RMM (continued)

Summary of card replacement procedure for an NT2X09 card in an RMM

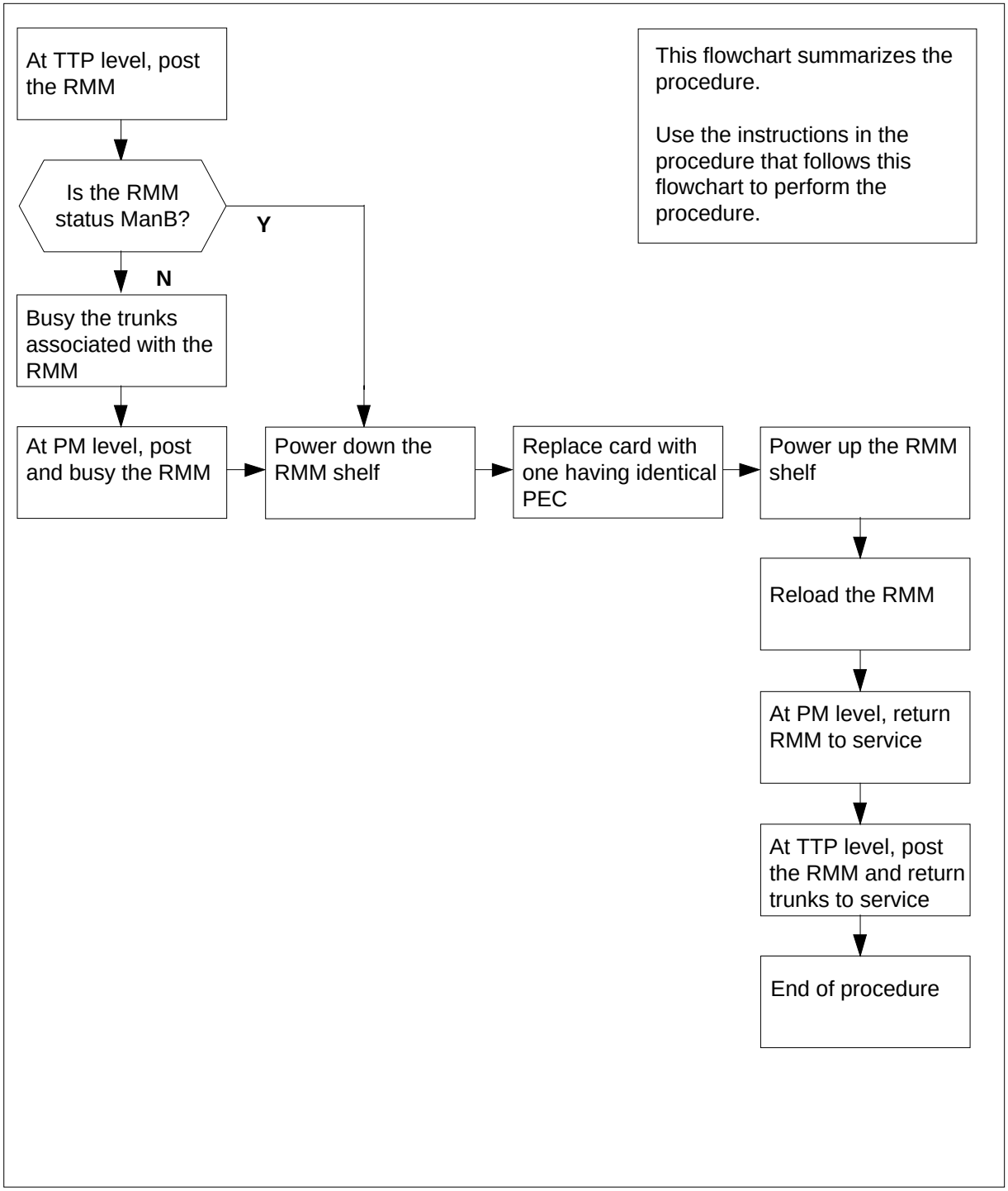

NT2X09
in an OPM RMM (continued)

Replacing an NT2X09 card in an RMM

At your current location

1 Obtain a replacement card. Ensure that the replacement card has the same product equipment code (PEC), including suffix, as the card to be removed.

2 If you were directed to this procedure from another maintenance procedure, go to step 8; otherwise, continue with step 3.

At the MAP display

3 Access the TTP level of the MAP and post the RMM that contains the card to be replaced by typing

>MAPCI;MTC;TRKS;TTP;POST P RMM rmm_no

and pressing the Enter key.

where

rmm_no
is the number of the RMM shelf in which the card is to be replaced

Example of a MAP response:

```
LAST CIRCUIT = 27
POST CKT IDLED
SHORT CLLI IS:  OTDA00
OK, CLLI POSTED

POST  20   DELQ       BUSY Q          DIG
TTP 6-006
CKT TYPE   PM NO.     COM LANG        STA S R DOT TE R
OG    MF RMM 0 0  OTWAON23DA00 2001   LO
                                      P_IDL
```

4 Check the status of the RMM.

If RMM status is	Do
MB, PMB, RMB	step 8
other	step 5

5 Busy the trunks that are associated with the RMM to be busied by typing

>BSY ALL

and pressing the Enter key.

6 Go to the PM level of the MAP and post the RMM by typing

>PM;POST RMM rmm_no

and pressing the Enter key.

where

NT2X09 in an OPM RMM (continued)

rmm_no
is the number of the RMM shelf in which the card is to be replaced

Example of a MAP display:

```
          SysB      ManB      Offl      CBsy      ISTb      InSv
PM           0         2         2         0         7        21
RMM          0         0         1         0         0         6

RMM     0     InSv
```

7 Busy the RMM by typing

>BSY

and pressing the Enter key.

At the RMM shelf

8

DANGER
Static electricity damage
Wear a wrist strap connected to the wrist strap grounding point of a frame supervisory panel (FSP) while handling circuit cards. This protects the cards against damage caused by static electricity.

Power down the unit by setting the ON/OFF switch on the power converter faceplate to the OFF position. Both the converter FAIL LED and FRAME FAIL lamp on the frame supervisory panel (FSP) will be ON. An audible alarm may sound. If an alarm does sound, silence it at the MAP terminal by typing

>sil

and pressing the Enter key.

9 Replace the NT2X09 card using the common replacing a card procedure in this document. When you have completed the procedure, return to this point.

10 Power up the RMM unit as follows:

a Ensure that the converter (NT2X09) is inserted. A major audible alarm may sound. This alarm is silenced when power is restored to the converter.

b Set the POWER switch to the ON position.

11 Press the RESET button on the power converter while setting the circuit breaker on the frame supervisory panel (FSP) to the ON position. Both the converter FAIL LED and FRAME FAIL lamp on the FSP will be ON.

12 If you were directed to this procedure from another maintenance procedure, return now to the procedure that directed you here and continue as directed; otherwise, continue with step 13.

NT2X09
in an OPM RMM (continued)

At the MAP display

13 Go to the PM level and post the RMM, if not already posted, and load the RMM by typing

`>PM;POST RMM rmm_no;LOADPM`

and pressing the Enter key.

where

rmm_no
is the number of the RMM associated with the new NT2X09 card

If	Do
message "loadfile not found in directory" is received	step 14
load passes	step 31
load fails	step 36

14 Determine the type of device on which the RMM load files are located.

If	Do
tape	step 15
IOC disk	step 21
SLM disk	step 26

15 Locate the tape that contains the PM load files.

At the IOE frame

16 Mount the tape on a magnetic tape drive.

At the MAP display

17 Download the tape by typing

`>MOUNT tape_no`

and pressing the Enter key.

where

tape_no
is the number of the tape drive containing the PM load files

18 List the contents of the tape in your user directory by typing

`>LIST T tape_no`

and pressing the Enter key.

where

tape_no
is the number of the tape drive containing the PM load files

19 Demount the tape drive by typing

```
>DEMOUNT T tape_no
```

and pressing the Enter key.

where

tape_no
is the number of the tape drive containing the PM load files

20 Go to step 30.

21 From office records, determine and note the number of the input/output controller (IOC) disk and the number of the volume that contains the PM load files.

22 Access the disk utility level of the MAP by typing

```
>DSKUT
```

and pressing the Enter key.

23 List the IOC file names into your user directory by typing

```
>LISTVOL volume_name  all
```

and pressing the Enter key.

where

volume_name
is the name of the volume that contains the PM load files, obtained in step 21.

24 Leave the disk utility by typing

```
>QUIT
```

and pressing the Enter key.

25 Go to step 30.

26 From office records, determine and note the number of the system load module (SLM) disk and the number of the volume that contains the PM load files.

27 Access the disk utility level of the MAP by typing

```
>DISKUT
```

and pressing the Enter key.

28 List the SLM file names into your user directory by typing

```
>LV CM;LF Volume_name
```

and pressing the Enter key.

where

Volume_name
is the name of the volume containing the PM load files, obtained in step 26.

NT2X09
in an OPM RMM (continued)

29 Leave the disk utility by typing

>QUIT

and pressing the Enter key.

30 Reload the RMM by typing

>LOADPM

and pressing the Enter key.

If	Do
load failed	step 36
load passed	step 31

31 Return the RMM to service by typing

>RTS

and pressing the Enter key.

If RTS	Do
passed	step 32
failed	step 36

32 Go to the TTP level of the MAP and post the RMM by typing

>TRKS;TTP;POST P RMM rmm_no

and pressing the Enter key.

33 Return to service the circuits by typing

>RTS ALL

and pressing the Enter key.

where

rmm_no
is the number of the RMM shelf in which the card is to be replaced

If RTS	Do
passed	step 34
failed	step 36

34 Send any faulty cards for repair according to local procedure.

35 Record the following items in office records:

- date the card was replaced
- serial number of the card
- symptoms that prompted replacement of the card

NT2X09
in an OPM RMM (end)

Go to step 37.

36 Obtain further assistance in replacing this card by contacting the personnel responsible for higher level of support.

37 You have completed this procedure.

NT2X09 in an RLCM RMM

Application

Use this procedure to replace the following card in an RMM.

PEC	Suffixes	Name
NT2X09	AA, AB	Multioutput Power Converter (5V/40A)

Common procedures

The replacing a card procedure is referenced in this procedure.

Action

The following flowchart is a summary of the procedure. To replace the card, use the instructions in the procedure that follows the flowchart.

NT2X09
in an RLCM RMM (continued)

Summary of card replacement procedure for an NT2X09 card in an RMM

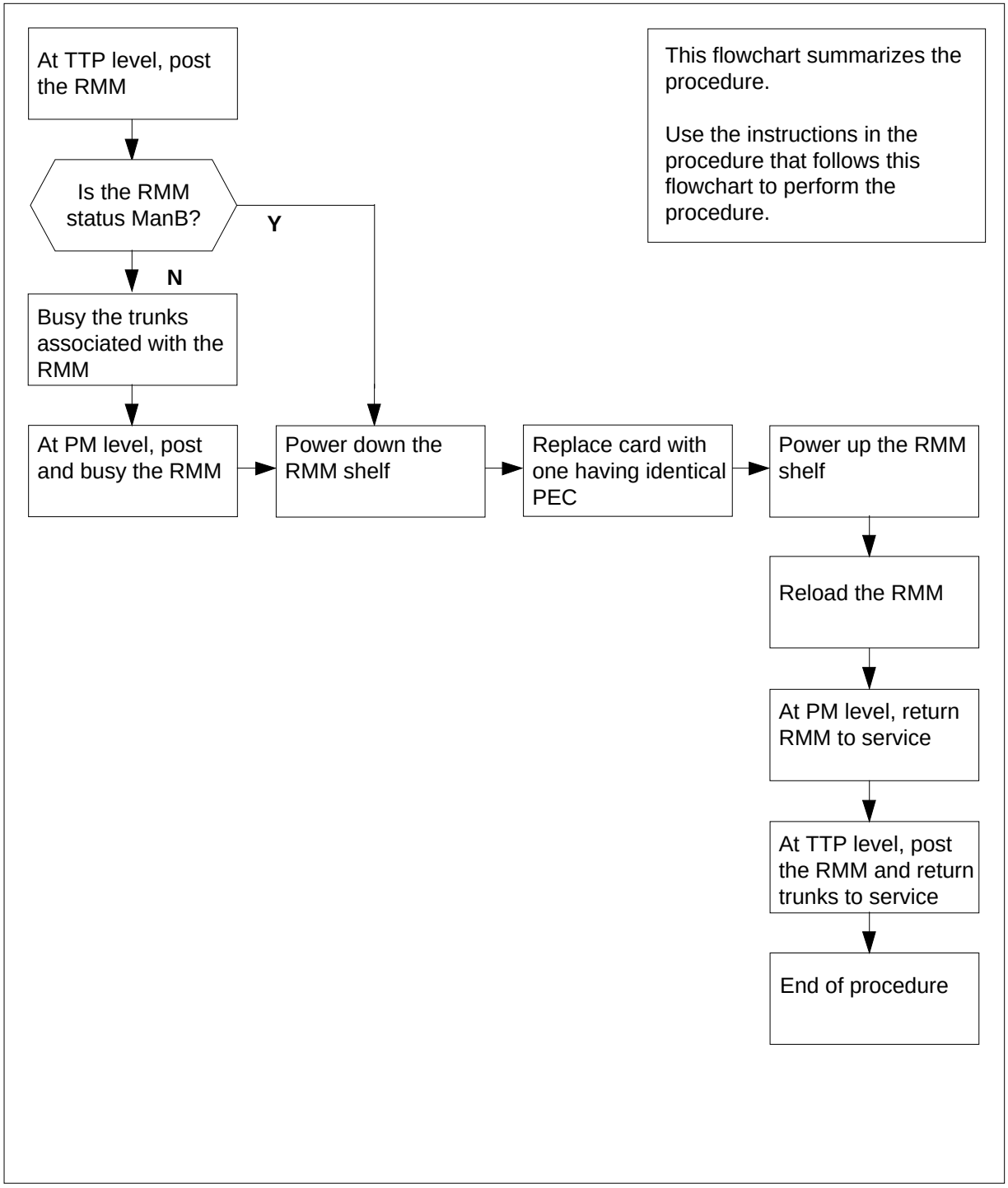

NT2X09 in an RLCM RMM (continued)

Replacing an NT2X09 card in an RMM

At your current location

1 Obtain a replacement card. Ensure that the replacement card has the same product equipment code (PEC), including suffix, as the card to be removed.

2 If you were directed to this procedure from another maintenance procedure, go to step 8; otherwise, continue with step 3.

At the MAP display

3 Access the TTP level of the MAP and post the RMM that contains the card to be replaced by typing

>MAPCI;MTC;TRKS;TTP;POST P RMM rmm_no

and pressing the Enter key.

where

rmm_no
is the number of the RMM shelf in which the card is to be replaced

Example of a MAP response:

```
LAST CIRCUIT = 27
POST CKT IDLED
SHORT CLLI IS:  OTDA00
OK, CLLI POSTED

POST  20   DELQ       BUSY Q          DIG
TTP 6-006
CKT TYPE   PM NO.     COM LANG        STA S R DOT TE R
OG    MF RMM 0 0  OTWAON23DA00 2001   LO
                                      P_IDL
```

4 Check the status of the RMM.

If RMM status is	Do
MB, PMB, RMB	step 8
other	step 5

5 Busy the trunks that are associated with the RMM to be busied by typing

>BSY ALL

and pressing the Enter key.

6 Go to the PM level of the MAP and post the RMM by typing

>PM;POST RMM rmm_no

and pressing the Enter key.

where

NT2X09
in an RLCM RMM (continued)

rmm_no
is the number of the RMM shelf in which the card is to be replaced

Example of a MAP display:

```
          SysB      ManB      Offl      CBsy      ISTb      InSv
PM           0         2         2         0         7        21
RMM          0         0         1         0         0         6

RMM     0     InSv
```

7 Busy the RMM by typing

>BSY

and pressing the Enter key.

At the RMM shelf

8

DANGER
Static electricity damage
Wear a wrist strap connected to the wrist strap grounding point of a frame supervisory panel (FSP) while handling circuit cards. This protects the cards against damage caused by static electricity.

Power down the unit by setting the ON/OFF switch on the power converter faceplate to the OFF position. Both the converter FAIL LED and FRAME FAIL lamp on the frame supervisory panel (FSP) will be ON. An audible alarm may sound. If an alarm does sound, silence it at the MAP terminal by typing

>sil

and pressing the Enter key.

9 Replace the NT2X09 card using the common replacing a card procedure in this document. When you have completed the procedure, return to this point.

10 Power up the RMM unit as follows:

a Ensure that the converter (NT2X09) is inserted. A major audible alarm may sound. This alarm is silenced when power is restored to the converter.

b Set the POWER switch to the ON position.

11 Press the RESET button on the power converter while setting the circuit breaker on the frame supervisory panel (FSP) to the ON position. Both the converter FAIL LED and FRAME FAIL lamp on the FSP will be ON.

12 If you were directed to this procedure from another maintenance procedure, return now to the procedure that directed you here and continue as directed; otherwise, continue with step 13.

NT2X09
in an RLCM RMM (continued)

At the MAP display

13 Go to the PM level and post the RMM, if not already posted, and load the RMM by typing

`>PM;POST RMM rmm_no;LOADPM`

and pressing the Enter key.

where

rmm_no
is the number of the RMM associated with the new NT2X09 card

If	Do
message "loadfile not found in directory" is received	step 14
load passed	step 31
load failed	step 36

14 Determine the type of device on which the RMM load files are located.

If	Do
tape	step 15
IOC disk	step 21
SLM disk	step 26

15 Locate the tape that contains the PM load files.

At the IOE frame

16 Mount the tape on a magnetic tape drive.

At the MAP display

17 Download the tape by typing

`>MOUNT tape_no`

and pressing the Enter key.

where

tape_no
is the number of the tape drive containing the PM load files

18 List the contents of the tape in your user directory by typing

`>LIST T tape_no`

and pressing the Enter key.

where

tape_no
is the number of the tape drive containing the PM load files

19 Demount the tape drive by typing

```
>DEMOUNT T tape_no
```

and pressing the Enter key.

where

tape_no
is the number of the tape drive containing the PM load files

20 Go to step 30.

21 From office records, determine and note the number of the input/output controller (IOC) disk and the number of the volume that contains the PM load files.

22 Access the disk utility level of the MAP by typing

```
>DSKUT
```

and pressing the Enter key.

23 List the IOC file names into your user directory by typing

```
>LISTVOL volume_name  all
```

and pressing the Enter key.

where

volume_name
is the name of the volume that contains the PM load files, obtained in step 21.

24 Leave the disk utility by typing

```
>QUIT
```

and pressing the Enter key.

25 Go to step 30.

26 From office records, determine and note the number of the system load module (SLM) disk and the number of the volume that contains the PM load files.

27 Access the disk utility level of the MAP by typing

```
>DISKUT
```

and pressing the Enter key.

28 List the SLM file names into your user directory by typing

```
>LV CM;LF Volume_name
```

and pressing the Enter key.

where

Volume_name
is the name of the volume containing the PM load files, obtained in step 26.

NT2X09
in an RLCM RMM (continued)

29 Leave the disk utility by typing

>QUIT

and pressing the Enter key.

30 Reload the RMM by typing

>LOADPM

and pressing the Enter key.

If	Do
load failed	step 36
load passed	step 31

31 Return the RMM to service by typing

>RTS

and pressing the Enter key.

If RTS	Do
passed	step 32
failed	step 36

32 Go to the TTP level of the MAP and post the RMM by typing

>TRKS;TTP;POST P RMM rmm_no

and pressing the Enter key.

33 Return to service the circuits by typing

>RTS ALL

and pressing the Enter key.

where

rmm_no
is the number of the RMM shelf in which the card is to be replaced

If RTS	Do
passed	step 34
failed	step 36

34 Send any faulty cards for repair according to local procedure.

35 Record the following items in office records:

- date the card was replaced
- serial number of the card
- symptoms that prompted replacement of the card

Go to step 37.

36 Obtain further assistance in replacing this card by contacting the personnel responsible for higher level of support.

37 You have completed this procedure.

NT2X09 in an RSC RMM

Application

Use this procedure to replace the following card in an RSC RMM.

PEC	Suffixes	Name
NT2X09	AD	Multi-output power converter

Common Procedures

None

Action

The following flowchart is a summary of the procedure. To replace the card, use the instructions in the procedure that follows the flowchart.

NT2X09
in an RSC RMM (continued)

Summary of card replacement procedure for an NT2X09 card in an RSC RMM

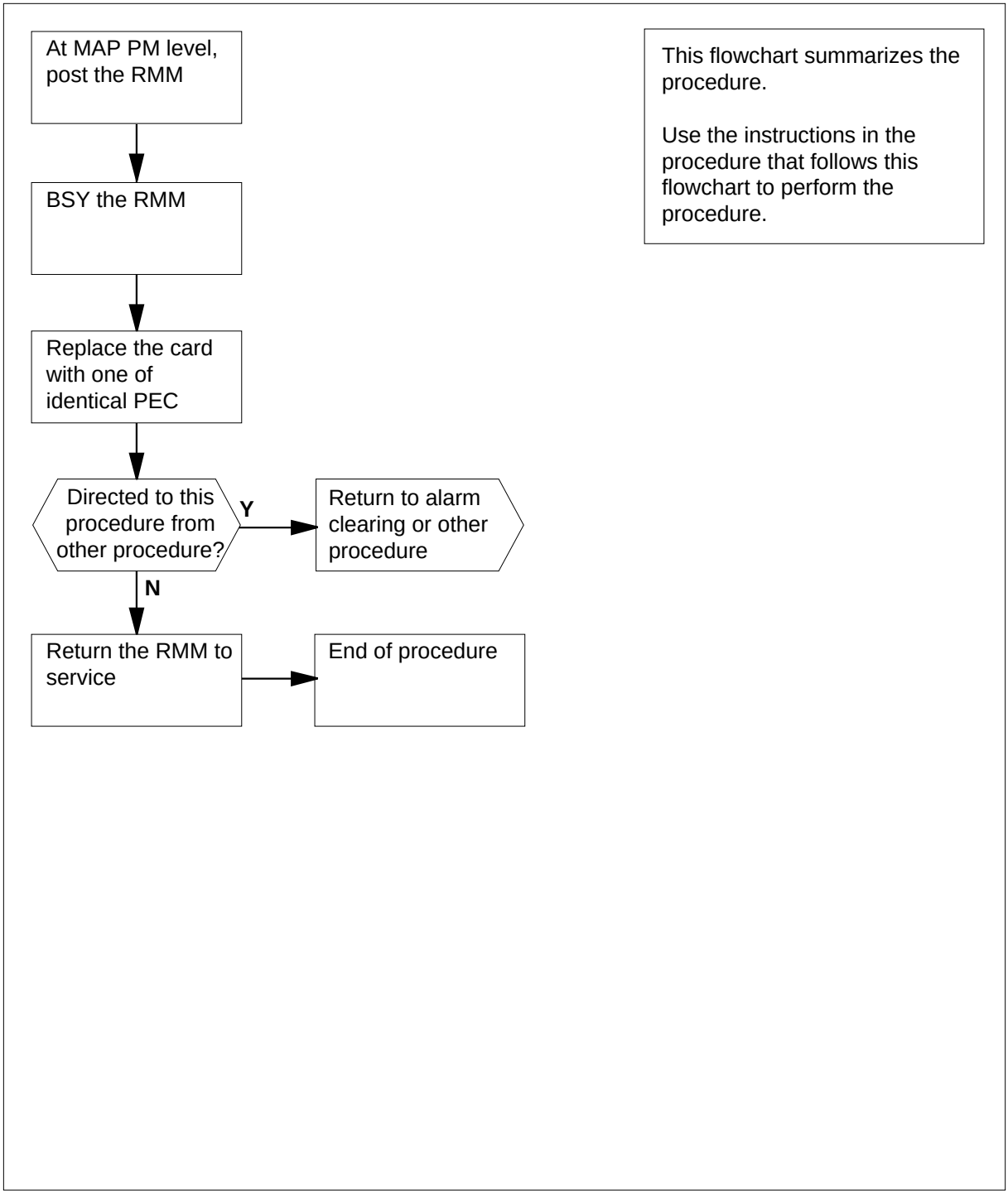

NT2X09
in an RSC RMM (continued)

Replacing an NT2X09 card in an RSC RMM

At your current location:

1 Proceed only if you were either directed to this card replacement procedure from a step in a maintenance procedure, are using the procedure to verify or accept cards, or were directed to this procedure by your maintenance support group.

2 Obtain a replacement card. Ensure the replacement card has the same product equipment code (PEC) including suffix, as the card to be removed.

At the MAP display

3 Access the PM level and post the RMM by typing

>MAPCI;MTC;PM;POST RMM rmm_no

and pressing the Enter key.

where

rmm_no
is the number of the RMM from which the card is to be removed

Example of a MAP display:

```
 CM     MS     IOD     Net     PM     CCS     LNS     Trks     Ext
 .      .       .       .      .      .       .       .        .
RMM              SysB     ManB     OffL     CBsy     ISTb     InSv
 0 Quit    PM      4        0       10       3        3        130
 2 Post_   RMM     0        1        1       0        0          2
 3
 4         RMM  5  INSV
 5 Trnsl
 6 Tst
 7 Bsy
 8 RTS
 9 OffL
10 LoadPM
11 Disp_
12 Next
13
14 QueryPM
15
16
17
18
```

4 Busy the RMM by typing

>BSY

and pressing the Enter key.

Example of a MAP display:

NT2X09
in an RSC RMM (continued)

```
 CM      MS      IOD      Net      PM      CCS      LNS      Trks       Ext
 .       .        .        .     1ManB     .        .        .          .
RMM                SysB      ManB      OffL      CBsy      ISTb       InSv
 0 Quit    PM       4         0         10        0         0          130
 2 Post_   RMM      0         1          0        0         0            0
 3
 4         RMM  5  ManB
 5 Trnsl
 6 Tst
 7 Bsy
 8 RTS
 9 OffL
10 LoadPM
11 Disp_
12 Next
13
14 QueryPM
15
16
17
18
```

At the RMM shelf

5

CAUTION
Static discharge may cause damage to circuit packs
Put on a wrist strap and connect it to the frame of the RMM before removing or inserting any cards. This protects the RMM against service degradation caused by static electricity.

Put on a wrist strap.

6 Power down the unit by setting the ON/OFF switch on the power converter faceplate to the OFF position. Both the converter FAIL LED and FRAME FAIL lamp on the frame supervisory panel (FSP) will be ON. An audible alarm may sound. If an alarm does sound, silence it by typing

`>SIL`

and pressing the Enter key.

NT2X09
in an RSC RMM (continued)

7

DANGER
Equipment damage
Take these precautions when removing or inserting a card:

1. Do not apply direct pressure to the components.
2. Do not force the cards into the slots.

Remove the NT2X09 card as shown in the following figures.

a Locate the card to be removed on the appropriate shelf.

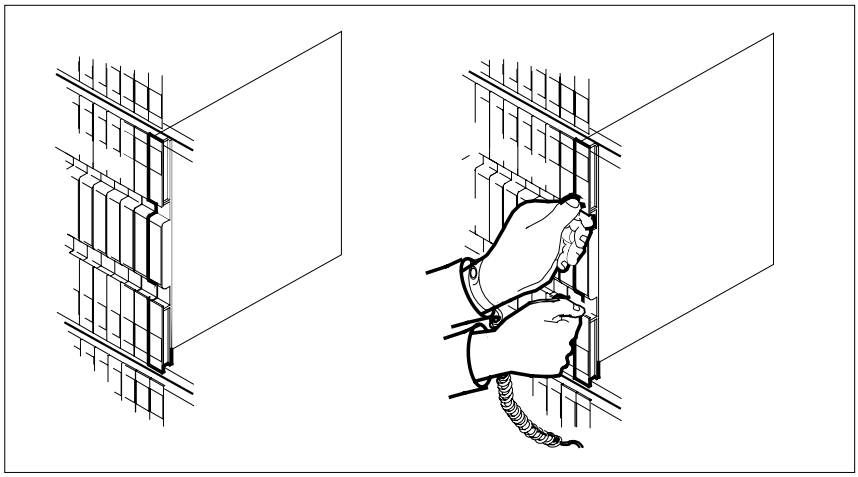

b Open the locking levers on the card to be replaced and gently pull the card towards you until it clears the shelf.

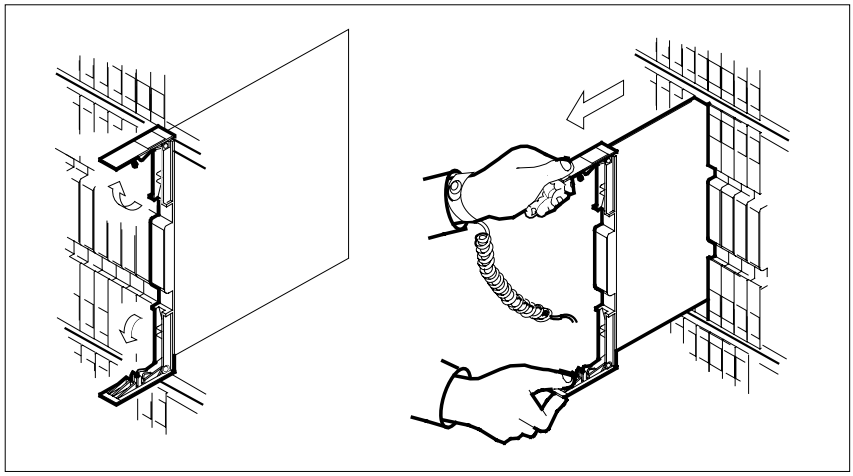

NT2X09
in an RSC RMM (continued)

c Ensure the replacement card has the same PEC, including suffix, as the card you just removed.

8 Open the locking levers on the replacement card.

Align the card with the slots in the shelf and gently slide the card into the shelf.

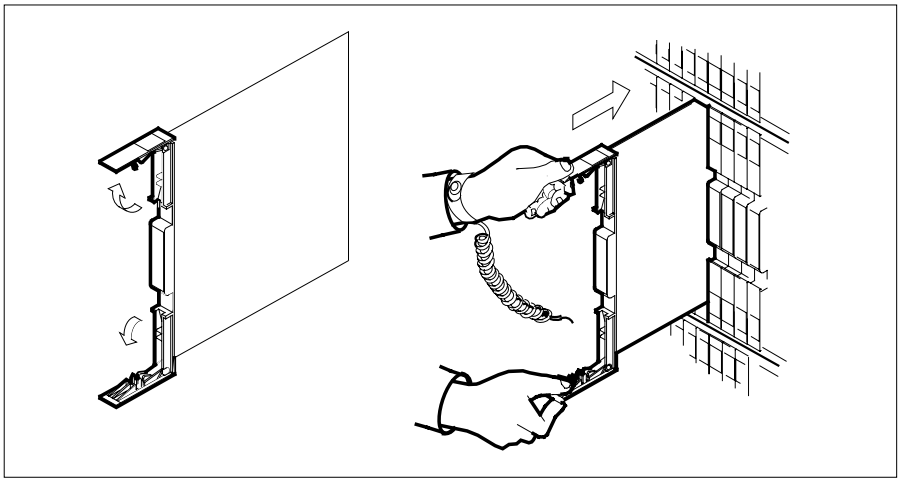

9 Seat and lock the card.

a Using your fingers or thumbs, push on the upper and lower edges of the faceplate to ensure the card is fully seated in the shelf.

b Close the locking levers.

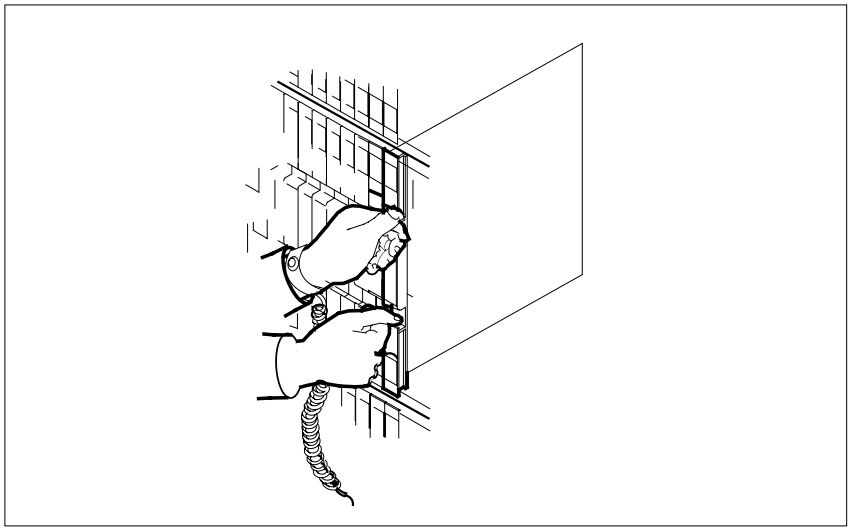

NT2X09
in an RSC RMM (continued)

10 Use the following information to determine the next step in this procedure.

If you entered this procedure from	Do
an alarm clearing procedure	step 20
other	step 11

11 Power up the RMM as follows:

a Ensure that the converter (NT2X09) is inserted. A major audible alarm may sound. This alarm is silenced when power is restored to the converter.

b Set the POWER switch to the ON position.

If FSP is equipped with	Do
fuses	step 12
circuit breakers	step 13

12 Press and hold the RESET button for one second. Both the converter FAIL LED and FRAME FAIL lamp on the frame supervisory panel (FSP) will be OFF. Go to step 14.

At the MAP display

13 Press the RESET button while setting the circuit breaker to the ON position. Both the converter FAIL LED and FRAME FAIL lamp on the frame supervisory panel (FSP) will be ON.

14 Reload the RMM by typing

>LOADPM

and pressing the Enter key.

If load	Do
passed	step 15
failed	step 21

15 Test the RMM by typing

>TST

and pressing the Enter key.

Example of a MAP display response:

```
Test Passed
```

or

```
Test Failed
```

If the TST	Do
passed	step 16
failed	step 21

16 Return the RMM to service by typing

>RTS

and pressing the Enter key.

If the RTS	Do
passed	step 17
failed	step 21

17 Send any faulty cards for repair according to local procedure.

18 Record the following items in office records:

- date the card was replaced
- serial number of the card
- symptoms that prompted replacement of the card

19 Go to step 22.

20 Return to the *Alarm Clearing Procedure* that directed you to this card replacement procedure. If necessary, go to the point where the faulty card list was produced, identify the next faulty card on the list, and go to the appropriate replacement procedure in this manual for that card.

21 Obtain further assistance in replacing this card by contacting personnel responsible for higher level of support.

22 You have successfully completed this procedure. Return to the maintenance procedure that directed you to this card replacement procedure and continue as directed.

NT2X09 in an RSC-S (DS-1) Model A RMM

Application

Use this procedure to replace an NT2X09 card in an RSC-S RMM.

PEC	Suffixes	Name
NT2X09	AA	Power Converter

Common procedures

None

Action

The following flowchart is only a summary of the procedure. To replace the card, use the instructions in the procedure that follows the flowchart.

NT2X09
in an RSC-S (DS-1) Model A RMM (continued)

Summary of card replacement procedure for an NT2X09 card in RSC-S RMM

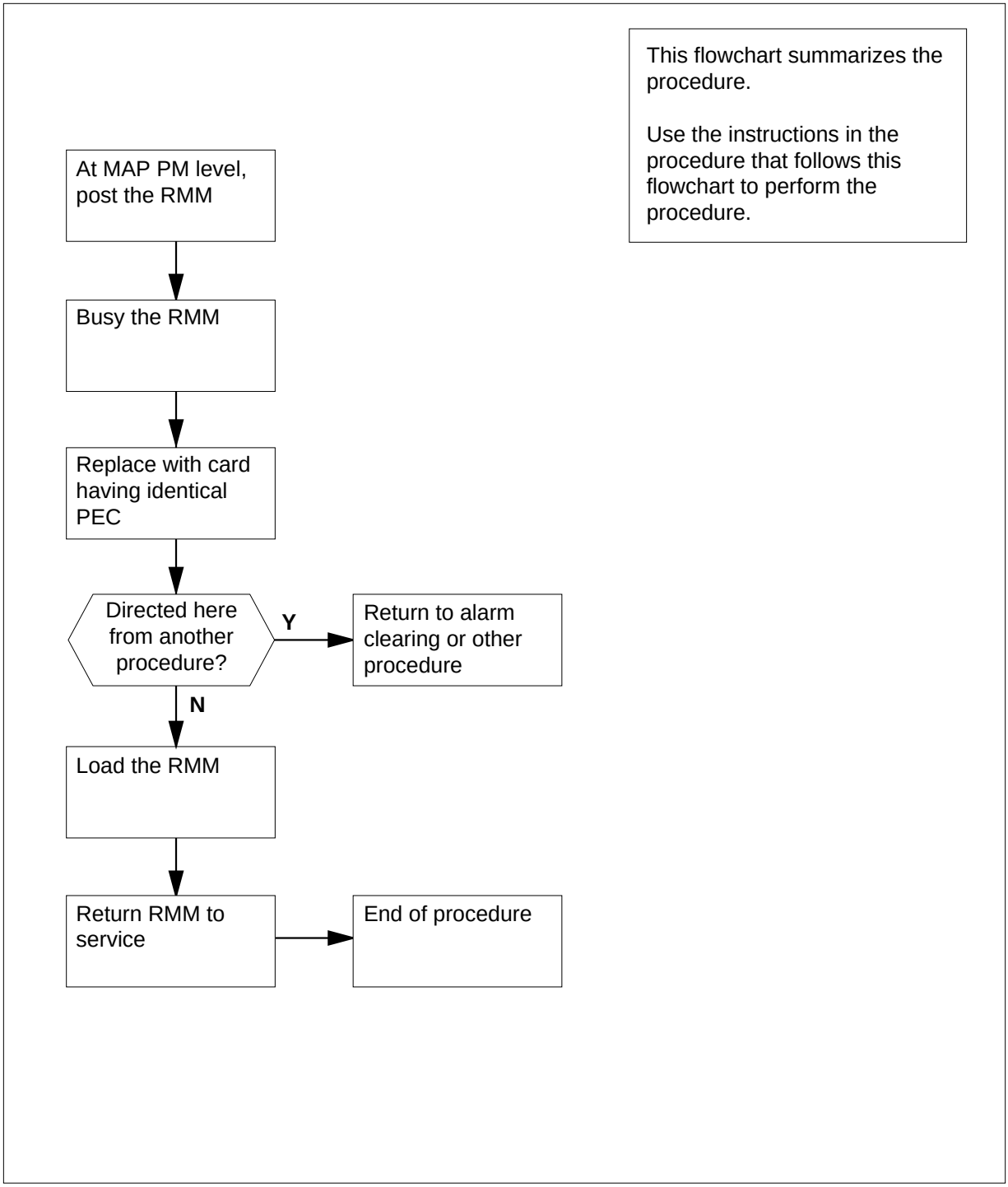

NT2X09 in an RSC-S (DS-1) Model A RMM (continued)

Replacing an NT2X09 card in RSC-S RMM

At your Current Location

1 Proceed only if you have been directed to this card replacement procedure from a step in a maintenance procedure, are using the procedure for verifying or accepting cards, or have been directed to this procedure by your maintenance support group.

2 Obtain an NT2X09 replacement card. Ensure the replacement card has the same product equipment code (PEC), including suffix, as the card to be removed.

At the MAP terminal

3 Set the MAP display to PM level by typing

>MAPCI;MTC;PM;POST RMM rmm_no

and pressing the Enter key.

where

rmm_no
is the number of the RMM unit where the card is to be removed

Example of a MAP display:

```
 CM    MS    IOD    Net     PM     CCS     LNS    Trks    Ext    Appl
  .     .     .      .       .      .       .       .       .      .

RMM               SysB     ManB     OffL     CBsy     ISTb      InSv
 0 Quit    PM      4        0        10       3        3        130
 2 Post_   RMM     0        1         1       0        0          2
 3
 4         RMM  5  INSV
 5 Trnsl
 6 Tst
 7 Bsy
 8 RTS
 9 OffL
10 LoadPM
11 Disp_
12 Next
13
14 QueryPM
15
16
17
18
```

4 Busy the RMM by typing

>BSY

and pressing the Enter key.

Example of a MAP display:

NT2X09
in an RSC-S (DS-1) Model A RMM (continued)

```
 CM    MS    IOD    Net     PM     CCS    LNS    Trks    Ext    Appl
 .     .      .      .     1ManB    .      .       .       .      .

RMM              SysB     ManB     OffL     CBsy     ISTb      InSv
 0 Quit    PM       4        0       10        0        0       130
 2 Post_   RMM      0        1        0        0        0         0
 3
 4         RMM  5  ManB
 5 Trnsl
 6 Tst
 7 Bsy
 8 RTS
 9 OffL
10 LoadPM
11 Disp_
12 Next
13
14 QueryPM
15
16
17
18
```

5

CAUTION
Static discharge may cause damage to circuit packs
Put on a wrist strap and connect it to the frame of the RMM before removing any cards. This protects the RMM against service degradation caused by static electricity.

Put on a wrist strap.

6 Power down the unit by setting the ON/OFF switch on the power converter faceplate to the OFF position. Both the converter FAIL LED and FRAME FAIL lamp on the frame supervisory panel (FSP) will be ON. An audible alarm may sound. If an alarm does sound, return to the MAP terminal and silence the alarm by typing

>sil

and pressing the Enter key.

7 Remove the NT2X09 card as shown in the following figures.

a Locate the card to be removed on the appropriate shelf.

NT2X09
in an RSC-S (DS-1) Model A RMM (continued)

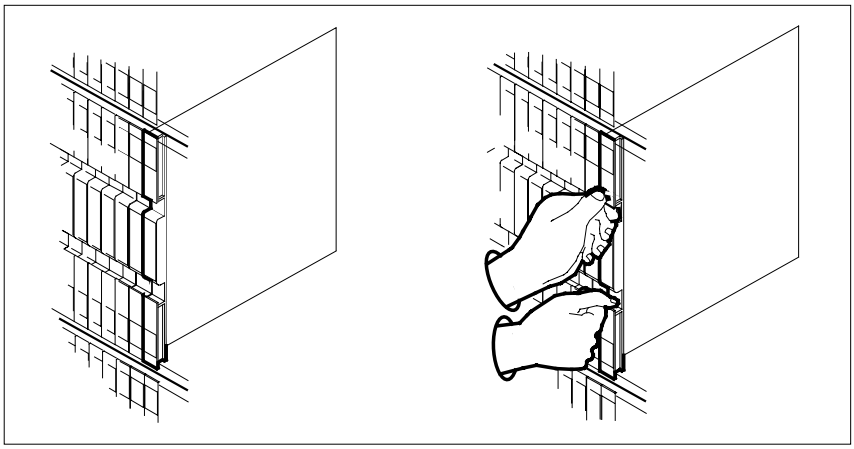

b Open the locking levers on the card to be replaced and gently pull the card toward you until it clears the shelf.

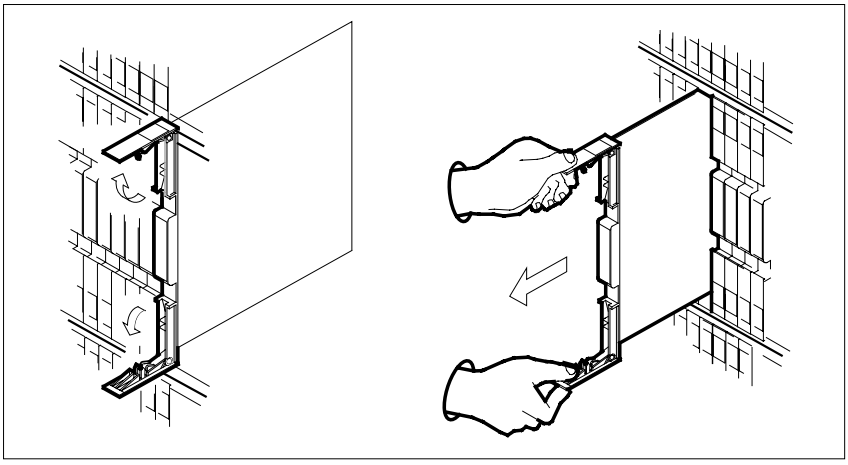

c Ensure the replacement card has the same PEC, including suffix, as the card you just removed.

8 Open the locking levers on the replacement card.

a Align the card with the slots in the shelf.

b Gently slide the card into the shelf.

NT2X09
in an RSC-S (DS-1) Model A RMM (continued)

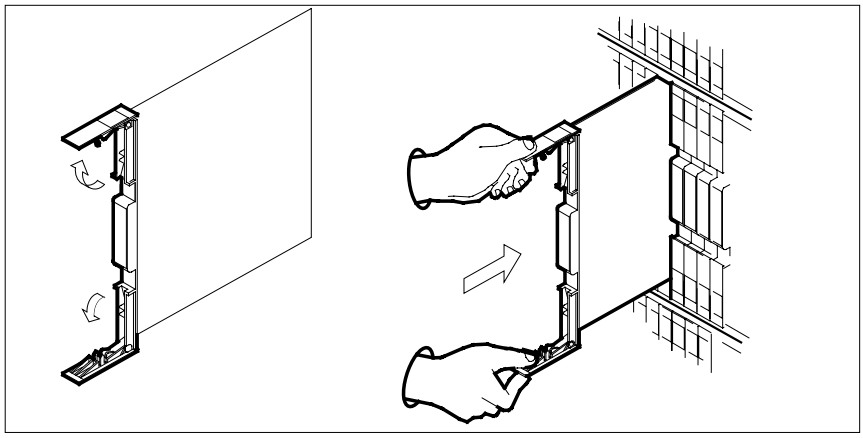

9

DANGER
Equipment damage
Take these precautions when removing or inserting a card:

1. Do not apply direct pressure to the components.
2. Do not force the card into its slot.

Seat and lock the card.

a Using your fingers or thumbs, push on the upper and lower edges of the faceplate to ensure that the card is fully seated in the shelf.

b Close the locking levers.

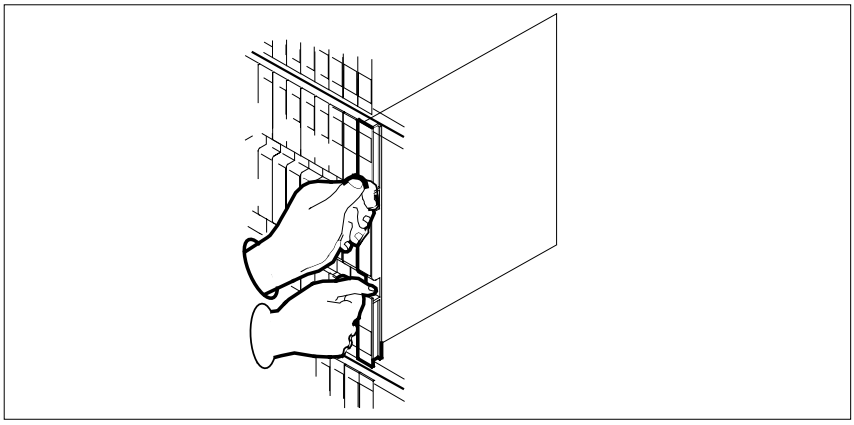

NT2X09
in an RSC-S (DS-1) Model A RMM (continued)

10 Use the following information to determine where to proceed.

If you entered this procedure from	Do
alarm clearing procedures	step 23
other	step 11

11 Power up the RMM unit in the following sequence:

a Ensure the converter (NT2X09) is inserted. A major audible alarm may sound. This alarm is silenced when power is restored to the converter.

b Set the POWER switch to the ON position.

If FSP is equipped with	Do
fuses	step 12
circuit breakers	step 13

12 Press and hold the RESET button for 1 s. Both the converter FAIL LED and FRAME FAIL lamp on the FSP will be OFF. Go to step 14.

13 Press the RESET button while setting the circuit breaker to the ON position. Both the converter FAIL LED and FRAME FAIL lamp on the FSP will be ON.

At the MAP terminal

14 Reload the RMM by typing

`>LOADPM`

and pressing the Enter key.

If	Do
message `loadfile not found in directory` is received	step 15
load passes	step 19
load fails	step 24

15 Use the following information to determine where to proceed.

If system load module	Do
version 1	step 16
version 2	step 17

NT2X09
in an RSC-S (DS-1) Model A RMM (continued)

16 List the loadfile in the directory by typing

>DSKUT;LISTVOL D000 volume_name ALL

and pressing the Enter key.

or

>DSKUT;LISTVOL D010 volume_name ALL

and pressing the Enter key.

where

volume_name
is the name of the loadfile

Local operating company policy determines where disk D000 or D010 is located.

Proceed to step 18.

17 List the loadfile in the directory by typing

>DISKUT;LV S00D

and pressing the Enter key.

>LF S00D file_name

and pressing the Enter key.

or

>DISKUT;LV S01D

and pressing the Enter key.

>LF S01D file_name

and pressing the Enter key.

where

file_name
is the name of the loadfile

18 Leave the disk utility by typing

>QUIT

and pressing the Enter key.

Return to step 14.

19 Test the RMM by typing

>TST

and pressing the Enter key.

If TST	Do
passed	step 20
failed	step 23

NT2X09 in an RSC-S (DS-1) Model A RMM (end)

20 Return the RMM to service by typing

>RTS

and pressing the Enter key.

If RTS	Do
passed	step 21
failed	step 24

21 Send any faulty cards for repair according to local procedure.

22 Record the date the card was replaced, the serial number of the card, and the symptoms prompted by replacement of the card. Go to step 25.

23 Return to the procedure that directed you to this procedure. At the point where a faulty card list was produced, identify the next faulty card on the list and go to the appropriate card replacement procedure for that card in this manual.

24 Obtain further assistance in replacing this card by contacting operating company maintenance personnel.

25 You have successfully completed this procedure. Return to the maintenance procedure that directed you to this card replacement procedure and continue as directed.

NT2X09 in an RSC-S (DS-1) Model B RMM

Application

Use this procedure to replace an NT2X09 card in an RSC-S RMM.

PEC	Suffixes	Name
NT2X09	AA	Power Converter

Common procedures

None

Action

The following flowchart is only a summary of the procedure. To replace the card, use the instructions in the procedure that follows the flowchart.

NT2X09
in an RSC-S (DS-1) Model B RMM (continued)

Summary of card replacement procedure for an NT2X09 card in RSC-S RMM

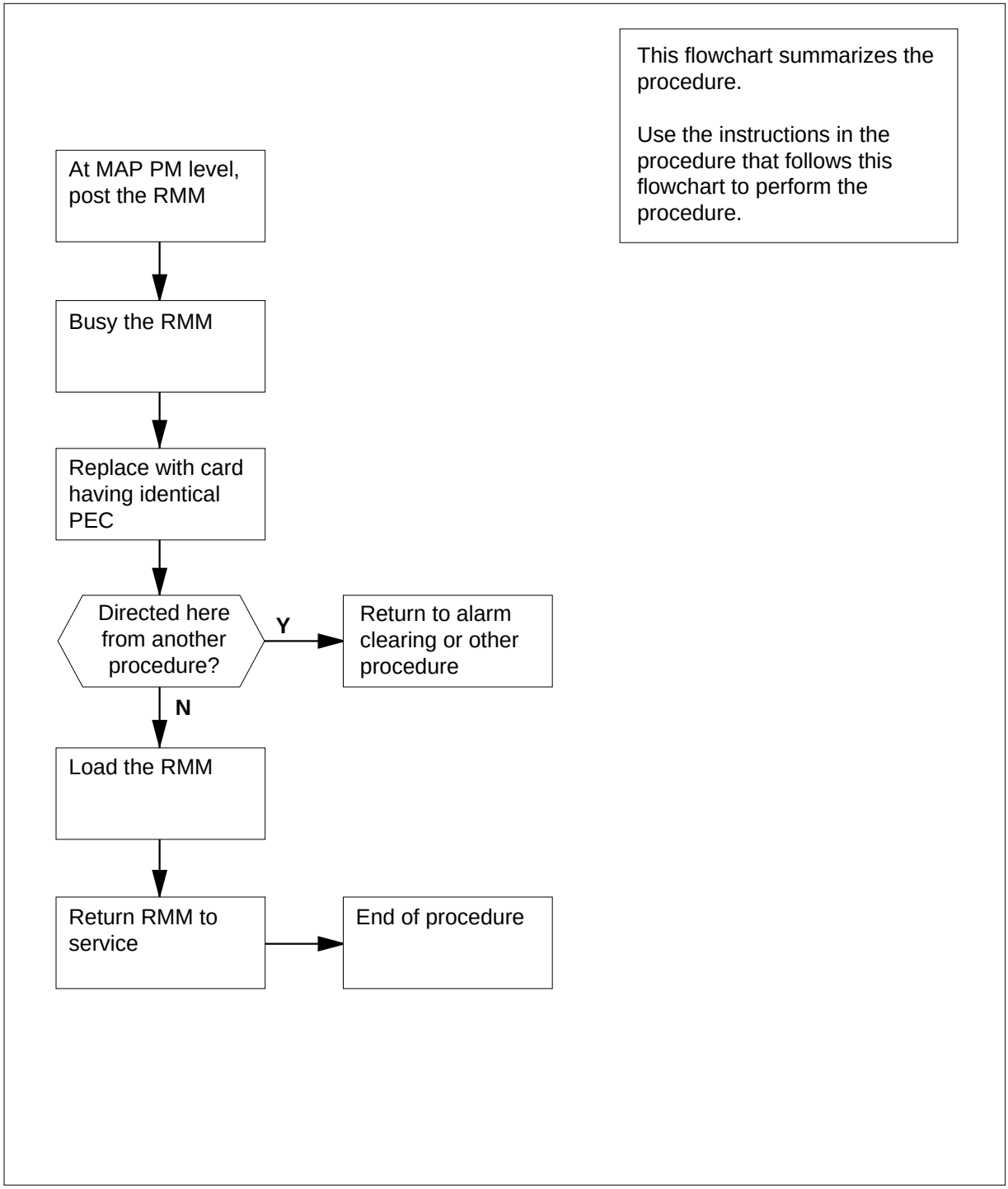

NT2X09 in an RSC-S (DS-1) Model B RMM (continued)

Replacing an NT2X09 card in RSC-S RMM

At your Current Location

1 Proceed only if you have been directed to this card replacement procedure from a step in a maintenance procedure, are using the procedure for verifying or accepting cards, or have been directed to this procedure by your maintenance support group.

2 Obtain an NT2X09 replacement card. Ensure the replacement card has the same product equipment code (PEC), including suffix, as the card to be removed.

At the MAP terminal

3 Set the MAP display to PM level by typing

>MAPCI;MTC;PM;POST RMM rmm_no

and pressing the Enter key.

where

rmm_no
is the number of the RMM unit where the card is to be removed

Example of a MAP display:

```
   CM    MS    IOD    Net     PM     CCS    LNS    Trks    Ext   Appl
    .     .      .      .      .      .      .      .       .     .

RMM              SysB     ManB     OffL     CBsy     ISTb      InSv
 0 Quit    PM       4        0       10        3        3       130
 2 Post_   RMM      0        1        1        0        0         2
 3
 4         RMM  5  INSV
 5 Trnsl
 6 Tst
 7 Bsy
 8 RTS
 9 OffL
10 LoadPM
11 Disp_
12 Next
13
14 QueryPM
15
16
17
18
```

4 Busy the RMM by typing

>BSY

and pressing the Enter key.

Example of a MAP display:

NT2X09
in an RSC-S (DS-1) Model B RMM (continued)

```
 CM    MS    IOD    Net     PM     CCS    LNS    Trks    Ext    Appl
  .     .      .      .    1ManB    .      .      .       .      .

RMM               SysB     ManB     OffL     CBsy     ISTb      InSv
 0 Quit    PM      4        0        10       0        0         130
 2 Post_   RMM     0        1         0       0        0           0
 3
 4         RMM  5  ManB
 5 Trnsl
 6 Tst
 7 Bsy
 8 RTS
 9 OffL
10 LoadPM
11 Disp_
12 Next
13
14 QueryPM
15
16
17
18
```

5

CAUTION
Static discharge may cause damage to circuit packs
Put on a wrist strap and connect it to the frame of the RMM before removing any cards. This protects the RMM against service degradation caused by static electricity.

Put on a wrist strap.

6 Power down the unit by setting the ON/OFF switch on the power converter faceplate to the OFF position. Both the converter FAIL LED and FRAME FAIL lamp on the modular supervisory panel (MSP) will be ON. An audible alarm may sound. If an alarm does sound, return to the MAP terminal and silence the alarm by typing

>sil

and pressing the Enter key.

7 Remove the NT2X09 card as shown in the following figures.

a Locate the card to be removed on the appropriate shelf.

NT2X09
in an RSC-S (DS-1) Model B RMM (continued)

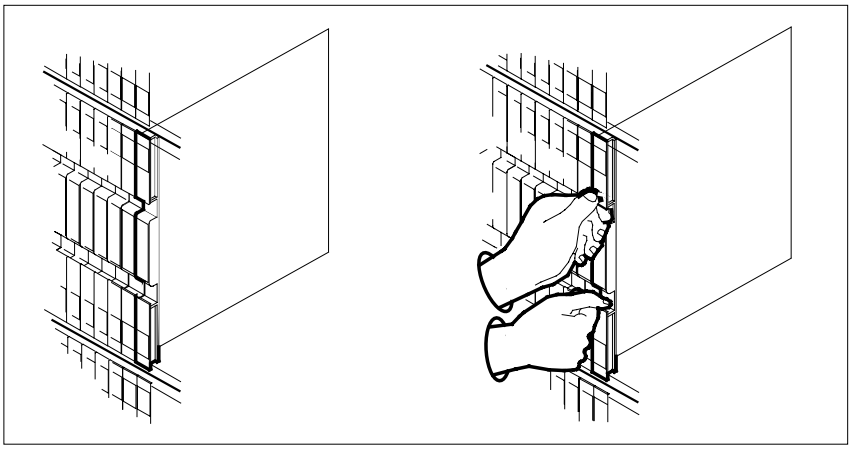

b Open the locking levers on the card to be replaced and gently pull the card toward you until it clears the shelf.

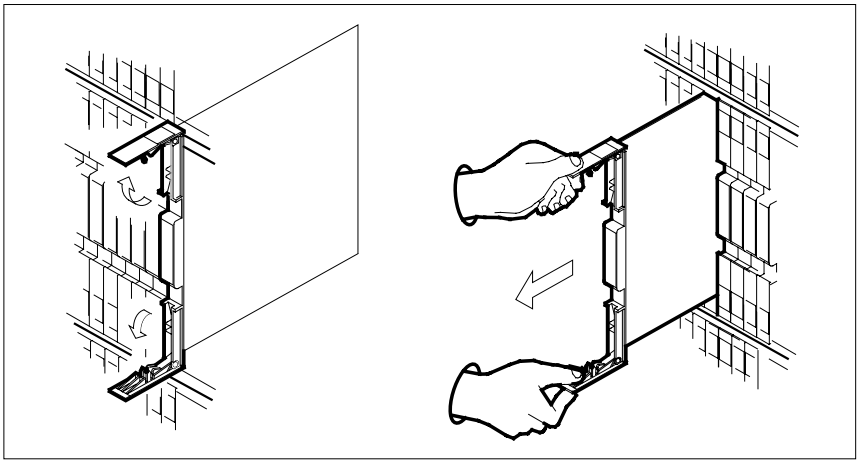

c Ensure the replacement card has the same PEC, including suffix, as the card you just removed.

8 Open the locking levers on the replacement card.

a Align the card with the slots in the shelf.

b Gently slide the card into the shelf.

NT2X09
in an RSC-S (DS-1) Model B RMM (continued)

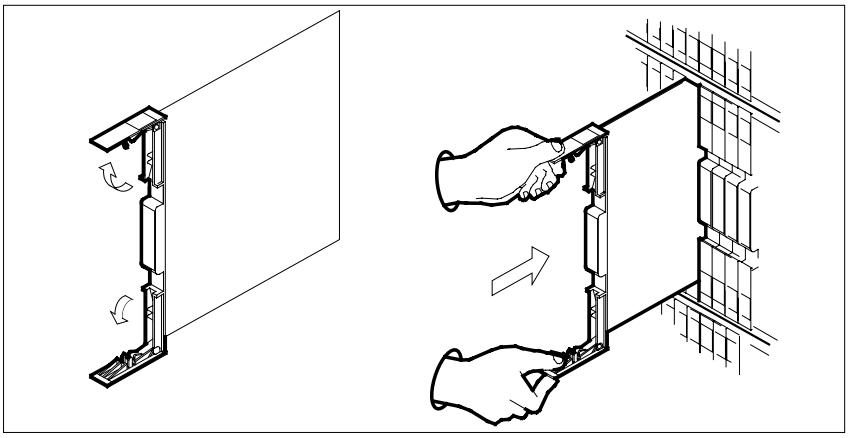

9

DANGER
Equipment damage
Take these precautions when removing or inserting a card:

1. Do not apply direct pressure to the components.
2. Do not force the card into its slot.

Seat and lock the card.

a Using your fingers or thumbs, push on the upper and lower edges of the faceplate to ensure that the card is fully seated in the shelf.

b Close the locking levers.

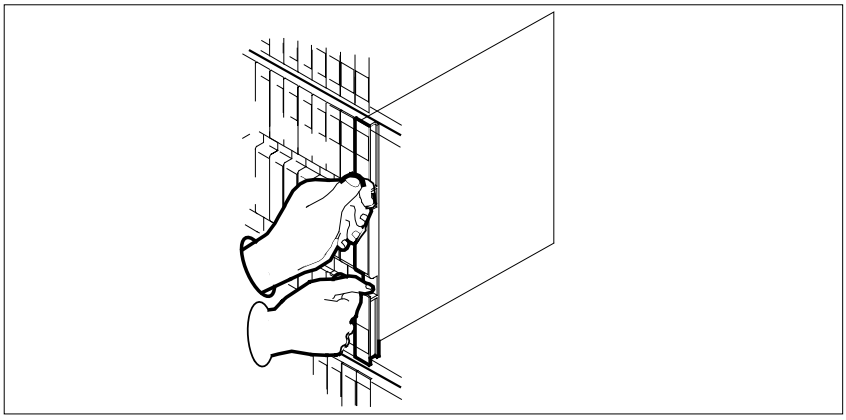

NT2X09
in an RSC-S (DS-1) Model B RMM (continued)

10 Use the following information to determine where to proceed.

If you entered this procedure from	Do
alarm clearing procedures	step 23
other	step 11

11 Power up the RMM unit in the following sequence:

a Ensure the converter (NT2X09) is inserted. A major audible alarm may sound. This alarm is silenced when power is restored to the converter.

b Set the POWER switch to the ON position.

If MSP is equipped with	Do
fuses	step 12
circuit breakers	step 13

12 Press and hold the RESET button for 1 s. Both the converter FAIL LED and FRAME FAIL lamp on the MSP will be OFF. Go to step 14.

13 Press the RESET button while setting the circuit breaker to the ON position. Both the converter FAIL LED and FRAME FAIL lamp on the MSP will be ON.

At the MAP terminal

14 Reload the RMM by typing

`>LOADPM`

and pressing the Enter key.

If	Do
message `loadfile not found in directory` is received	step 15
load passes	step 19
load fails	step 24

15 Use the following information to determine where to proceed.

If system load module	Do
version 1	step 16
version 2	step 17

NT2X09
in an RSC-S (DS-1) Model B RMM (continued)

16 List the loadfile in the directory by typing

`>DSKUT;LISTVOL D000 volume_name ALL`

and pressing the Enter key.

or

`>DSKUT;LISTVOL D010 volume_name ALL`

and pressing the Enter key.

where

volume_name
is the name of the loadfile

Local operating company policy determines where disk D000 or D010 is located.

Proceed to step 18.

17 List the loadfile in the directory by typing

`>DISKUT;LV S00D`

and pressing the Enter key.

`>LF S00D file_name`

and pressing the Enter key.

or

`>DISKUT;LV S01D`

and pressing the Enter key.

`>LF S01D file_name`

and pressing the Enter key.

where

file_name
is the name of the loadfile

18 Leave the disk utility by typing

`>QUIT`

and pressing the Enter key.

Return to step 14.

19 Test the RMM by typing

`>TST`

and pressing the Enter key.

If TST	Do
passed	step 20
failed	step 23

NT2X09
in an RSC-S (DS-1) Model B RMM (end)

20 Return the RMM to service by typing

>RTS

and pressing the Enter key.

If RTS	Do
passed	step 21
failed	step 24

21 Send any faulty cards for repair according to local procedure.

22 Record the date the card was replaced, the serial number of the card, and the symptoms prompted by replacement of the card. Go to step 25.

23 Return to the procedure that directed you to this procedure. At the point where a faulty card list was produced, identify the next faulty card on the list and go to the appropriate card replacement procedure for that card in this manual.

24 Obtain further assistance in replacing this card by contacting operating company maintenance personnel.

25 You have successfully completed this procedure. Return to the maintenance procedure that directed you to this card replacement procedure and continue as directed.

NT2X09 in an RSC-S (PCM-30) Model A RMM

Application

Use this procedure to replace an NT2X09 card in an RSC-S RMM.

PEC	Suffixes	Name
NT2X09	AA	Power Converter

Common procedures

None

Action

The following flowchart is only a summary of the procedure. To replace the card, use the instructions in the procedure that follows the flowchart.

NT2X09
in an RSC-S (PCM-30) Model A RMM (continued)

Summary of card replacement procedure for an NT2X09 card in RSC-S RMM

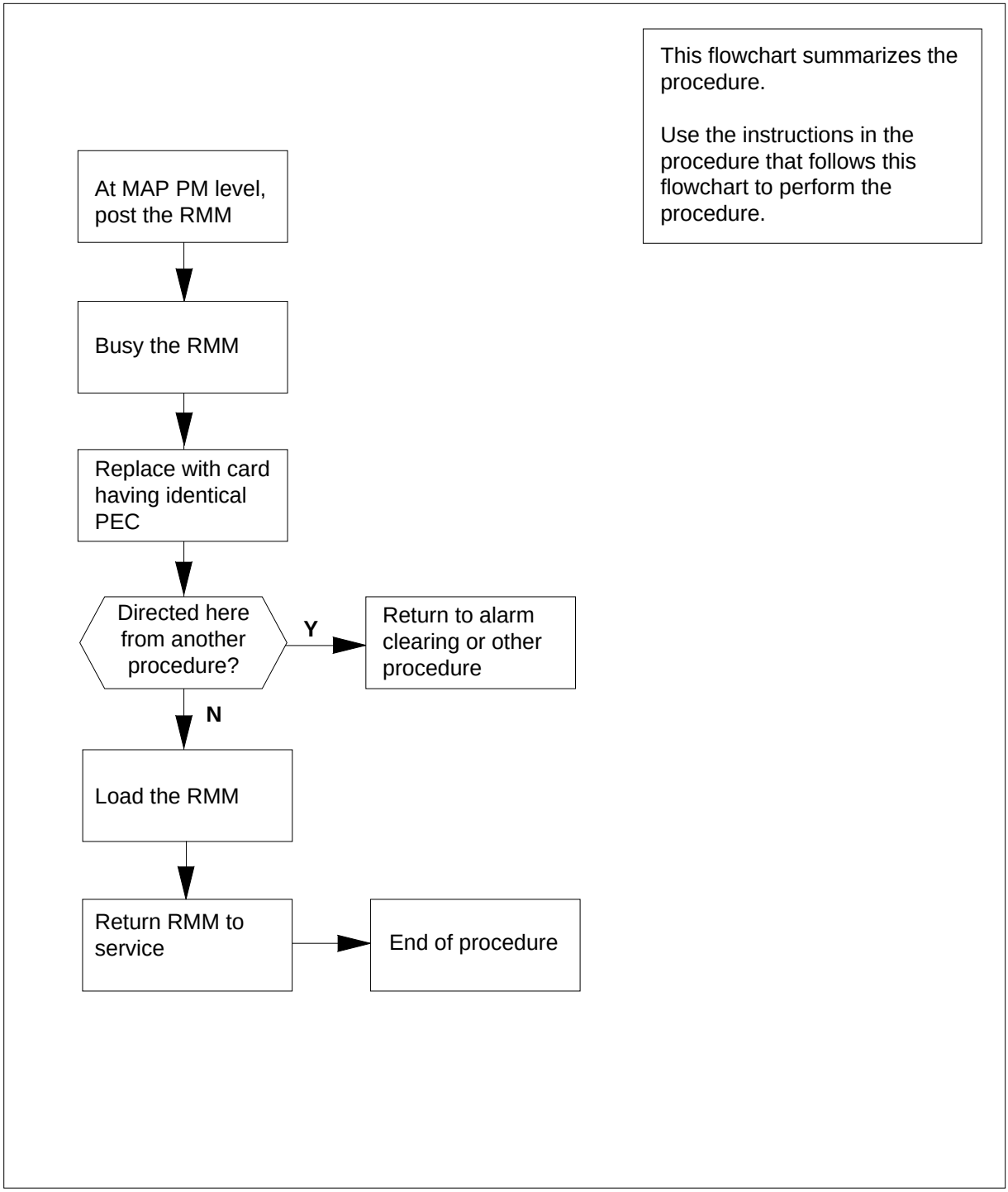

NT2X09 in an RSC-S (PCM-30) Model A RMM (continued)

Replacing an NT2X09 card in RSC-S RMM

1 Proceed only if you have been directed to this card replacement procedure from a step in a maintenance procedure, are using the procedure for verifying or accepting cards, or have been directed to this procedure by your maintenance support group.

2 Obtain an NT2X09 replacement card. Ensure the replacement card has the same product equipment code (PEC), including suffix, as the card to be removed.

At the MAP terminal

3 Set the MAP display to PM level by typing

>MAPCI;MTC;PM;POST RMM rmm_no

and pressing the Enter key.

where

rmm_no
is the number of the RMM unit where the card is to be removed

Example of a MAP display:

```
 CM      MS      IOD      Net      PM      CCS      LNS     Trks      Ext    Appl
 .       .        .        .       .        .        .        .        .       .
RMM                SysB     ManB     OffL     CBsy     ISTb      InSv
 0 Quit     PM       4        0       10        3        3       130
 2 Post_    RMM      0        1        1        0        0         2
 3
 4          RMM  5  INSV
 5 Trnsl
 6 Tst
 7 Bsy
 8 RTS
 9 OffL
10 LoadPM
11 Disp_
12 Next
13
14 QueryPM
15
16
17
18
```

4 Busy the RMM by typing

>BSY

and pressing the Enter key.

Example of a MAP display:

NT2X09
in an RSC-S (PCM-30) Model A RMM (continued)

```
 CM    MS     IOD    Net     PM     CCS    LNS     Trks     Ext    Appl
 .      .      .      .     1ManB    .      .       .        .      .
RMM              SysB     ManB     OffL     CBsy     ISTb       InSv
 0 Quit    PM      4        0        10       0        0         130
 2 Post_   RMM     0        1         0       0        0           0
 3
 4         RMM  5  ManB
 5 Trnsl
 6 Tst
 7 Bsy
 8 RTS
 9 OffL
10 LoadPM
11 Disp_
12 Next
13
14 QueryPM
15
16
17
18
```

5

CAUTION
Static discharge may cause damage to circuit packs
Put on a wrist strap and connect it to the frame of the RMM before removing any cards. This protects the RMM against service degradation caused by static electricity.

Put on a wrist strap.

6 Power down the unit by setting the ON/OFF switch on the power converter faceplate to the OFF position. Both the converter FAIL LED and FRAME FAIL lamp on the frame supervisory panel (FSP) will be ON. An audible alarm may sound. If an alarm does sound, return to the MAP terminal and silence the alarm by typing

>sil

and pressing the Enter key.

7 Remove the NT2X09 card as shown in the following figures.

a Locate the card to be removed on the appropriate shelf.

NT2X09
in an RSC-S (PCM-30) Model A RMM (continued)

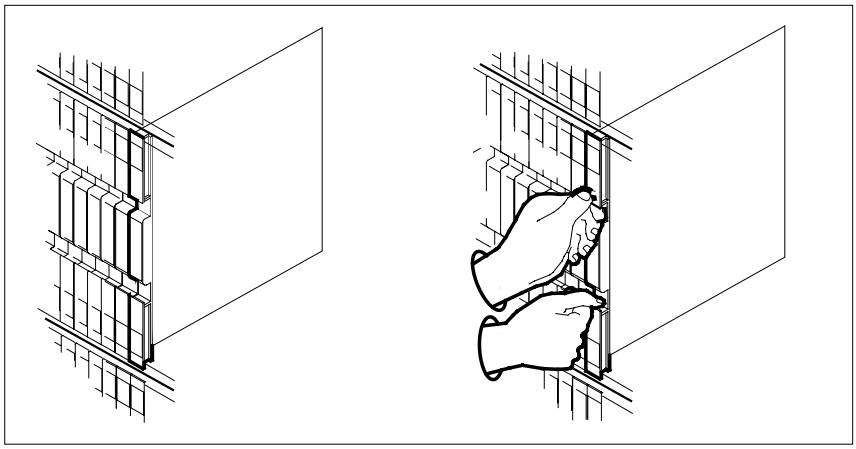

b Open the locking levers on the card to be replaced and gently pull the card toward you until it clears the shelf.

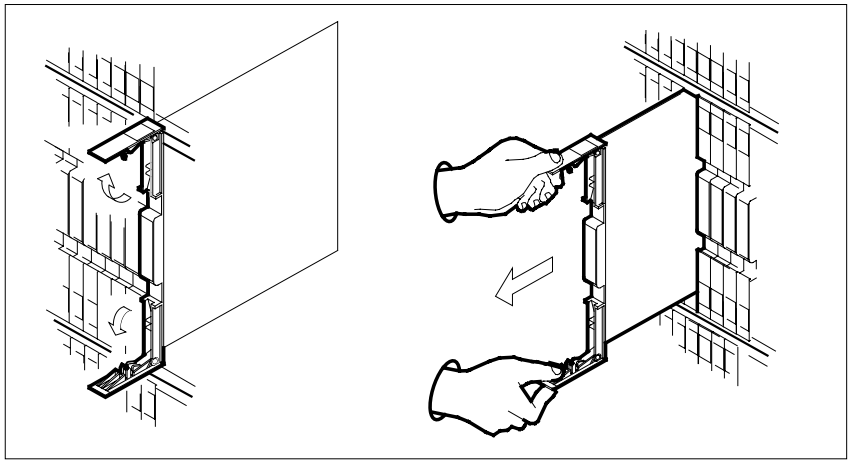

c Ensure the replacement card has the same PEC, including suffix, as the card you just removed.

8 Open the locking levers on the replacement card.

a Align the card with the slots in the shelf.

b Gently slide the card into the shelf.

NT2X09
in an RSC-S (PCM-30) Model A RMM (continued)

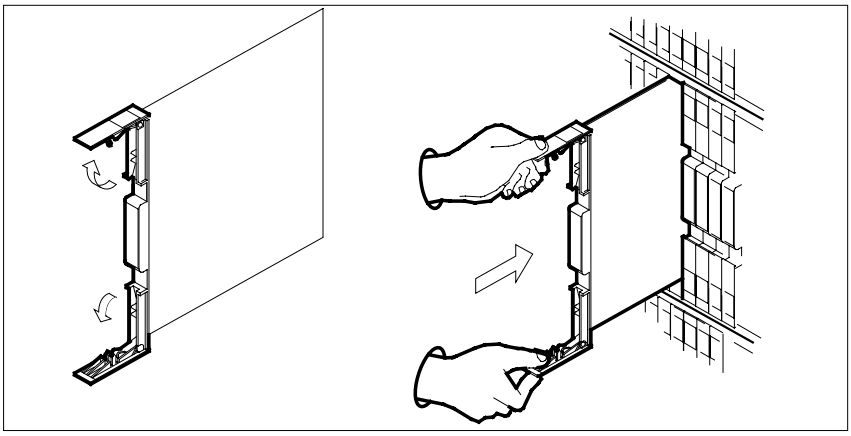

9

DANGER
Equipment damage
Take these precautions when removing or inserting a card:

1. Do not apply direct pressure to the components.
2. Do not force the card into its slot.

Seat and lock the card.

a Using your fingers or thumbs, push on the upper and lower edges of the faceplate to ensure that the card is fully seated in the shelf.

b Close the locking levers.

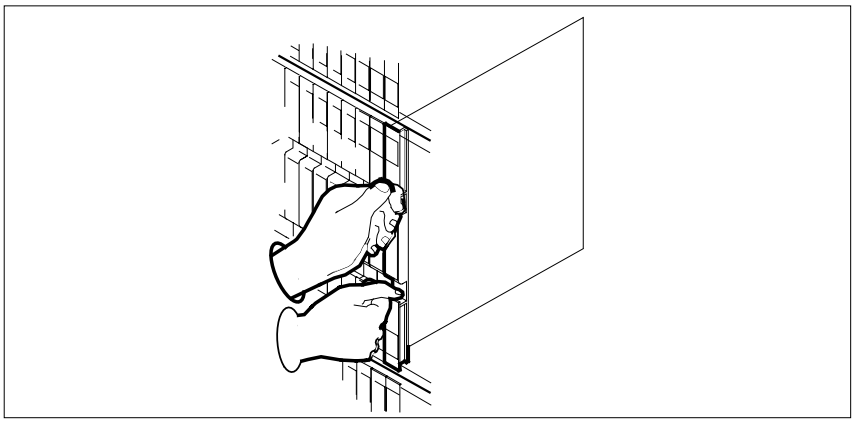

NT2X09
in an RSC-S (PCM-30) Model A RMM (continued)

10 Use the following information to determine where to proceed.

If you entered this procedure from	Do
alarm clearing procedures	step 23
other	step 11

11 Power up the RMM unit in the following sequence:

a Ensure the converter (NT2X09) is inserted. A major audible alarm may sound. This alarm is silenced when power is restored to the converter.

b Set the POWER switch to the ON position.

If FSP is equipped with	Do
fuses	step 12
circuit breakers	step 13

12 Press and hold the RESET button for 1 s. Both the converter FAIL LED and FRAME FAIL lamp on the FSP will be OFF. Go to step 14.

13 Press the RESET button while setting the circuit breaker to the ON position. Both the converter FAIL LED and FRAME FAIL lamp on the FSP will be ON.

At the MAP terminal

14 Reload the RMM by typing

`>LOADPM`

and pressing the Enter key.

If	Do
message `loadfile not found in directory` is received	step 15
load passes	step 19
load fails	step 24

15 Use the following information to determine where to proceed.

If system load module	Do
version 1	step 16
version 2	step 17

NT2X09
in an RSC-S (PCM-30) Model A RMM (continued)

16 List the loadfile in the directory by typing

>DSKUT;LISTVOL D000 volume_name ALL

and pressing the Enter key.

or

>DSKUT;LISTVOL D010 volume_name ALL

and pressing the Enter key.

where

volume_name
is the name of the loadfile

Local operating company policy determines where disk D000 or D010 is located.

Proceed to step 18.

17 List the loadfile in the directory by typing

>DISKUT;LV S00D

and pressing the Enter key.

>LF S00D file_name

and pressing the Enter key.

or

>DISKUT;LV S01D

and pressing the Enter key.

>LF S01D file_name

and pressing the Enter key.

where

file_name
is the name of the loadfile

18 Leave the disk utility by typing

>QUIT

and pressing the Enter key.

Return to step 14.

19 Test the RMM by typing

>TST

and pressing the Enter key.

If TST	Do
passed	step 20
failed	step 23

NT2X09 in an RSC-S (PCM-30) Model A RMM (end)

20 Return the RMM to service by typing

>RTS

and pressing the Enter key.

If RTS	Do
passed	step 21
failed	step 24

21 Send any faulty cards for repair according to local procedure.

22 Record the date the card was replaced, the serial number of the card, and the symptoms prompted by replacement of the card. Go to step 25.

23 Return to the procedure that directed you to this procedure. At the point where a faulty card list was produced, identify the next faulty card on the list and go to the appropriate card replacement procedure for that card in this manual.

24 Obtain further assistance in replacing this card by contacting operating company maintenance personnel.

25 You have successfully completed this procedure. Return to the maintenance procedure that directed you to this card replacement procedure and continue as directed.

NT2X10 in an OPM RMM

Application

Use this procedure to replace the following card in an RMM.

PEC	Suffixes	Name
NT2X10	AA, AC, BA	Line Test Unit Analog Card (LTUA)

Common procedures

The replacing a card procedure is referenced in this procedure.

Action

The following flowchart is a summary of the procedure. To replace the card, use the instructions in the procedure that follows the flowchart.

NT2X10
in an OPM RMM (continued)

Summary of card replacement procedure for an NT2X10 card in an RMM

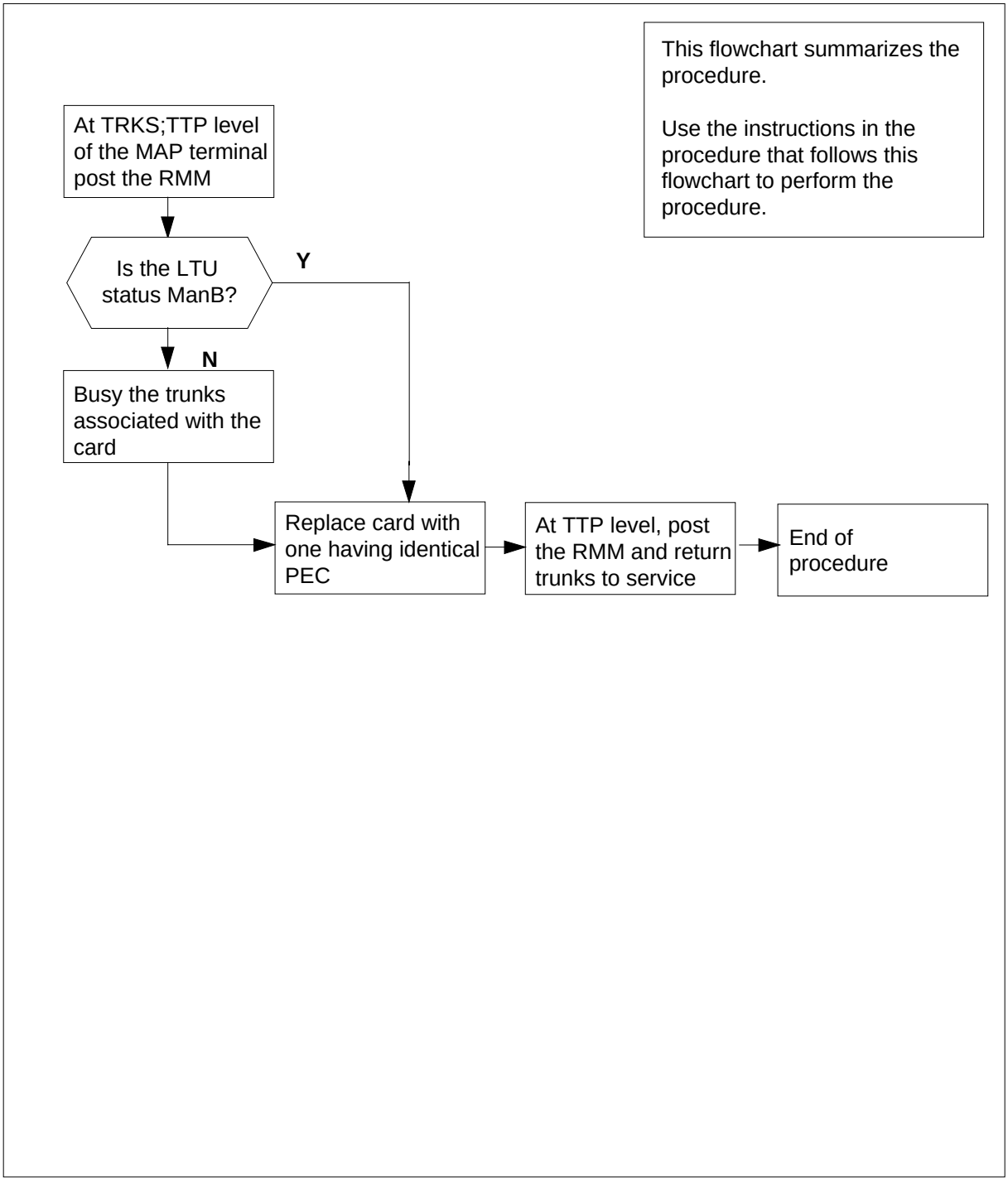

NT2X10 in an OPM RMM (continued)

Replacing an NT2X10 card in an RMM

At your current location

1 Obtain a replacement card. Ensure that the replacement card has the same product equipment code (PEC), including suffix, as the card to be removed.

At the MAP display

2 Access the TTP level of the MAP and post the Line Test Unit to be replaced by typing

`>MAPCI;MTC;TRKS;TTP;POST T LTU ltu_no`

and pressing the Enter key.

where

ltu_no
is the number of the faulty LTU

Example of a MAP response:

```
LAST CIRCUIT = 27
POST CKT IDLED
SHORT CLLI IS:  LTU
OK, CLLI POSTED

POST       DELQ       BUSY Q          DIG
TTP 6-006
CKT TYPE   PM NO.     COM LANG        STA S R DOT TE R
OG         RMM 0 0     LTU   21       IDL
```

3 Busy the trunks that are associated with the card to be replaced by typing

`>BSY`

and pressing the Enter key.

NT2X10 in an OPM RMM (end)

At the RMM shelf

4

WARNING
Static electricity damage
Wear a wrist strap connected to the wrist strap grounding point of a frame supervisory panel (FSP) while handling circuit cards. This protects the cards against damage caused by static electricity.

Replace the NT2X10 card using the common replacing a card procedure in this document. When you have completed the procedure, return to this point.

At the MAP display

5 Test the new NT2X10 card by typing

>TST

and pressing the Enter key.

If TST	Do
passed	step 6
failed	step 9

6 Return to service the circuits busied in step 3 by typing

>RTS

and pressing the Enter key.

If RTS	Do
passed	step 7
failed	step 9

7 Send any faulty cards for repair according to local procedure.

8 Record the following items in office records:

- date the card was replaced
- serial number of the card
- symptoms that prompted replacement of the card

Go to step 10.

9 Obtain further assistance in replacing this card by contacting the personnel responsible for higher level of support.

10 You have completed this procedure.

NT2X10 in an RLCM RMM

Application

Use this procedure to replace the following card in an RMM.

PEC	Suffixes	Name
NT2X10	AA, AC, BA	Line Test Unit Analog Card (LTUA)

Common procedures

The replacing a card procedure is referenced in this procedure.

Action

The following flowchart is a summary of the procedure. To replace the card, use the instructions in the procedure that follows the flowchart.

NT2X10 in an RLCM RMM (continued)

Summary of card replacement procedure for an NT2X10 card in an RMM

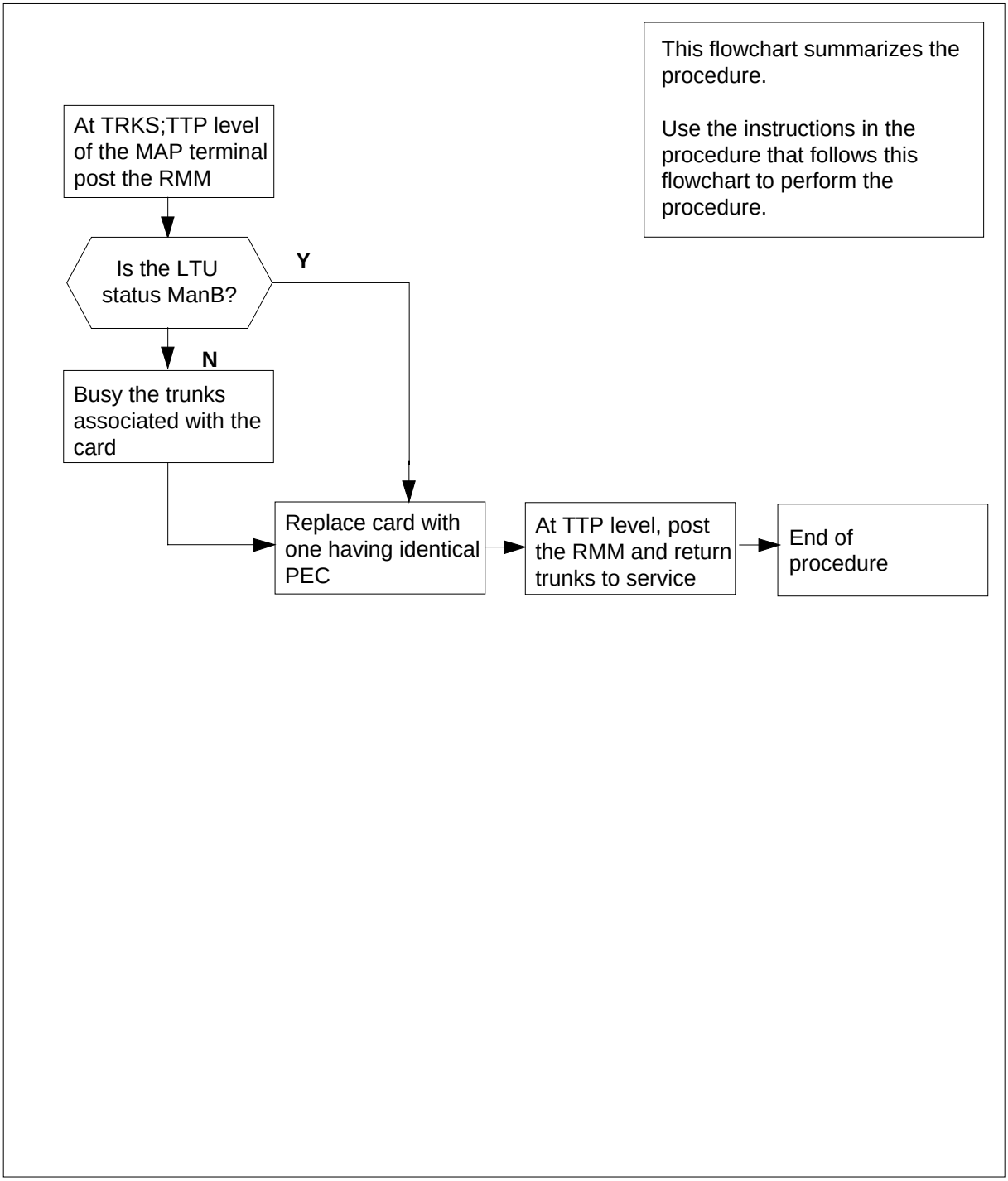

NT2X10 in an RLCM RMM (continued)

Replacing an NT2X10 card in an RMM

At your current location

1 Obtain a replacement card. Ensure that the replacement card has the same product equipment code (PEC), including suffix, as the card to be removed.

At the MAP display

2 Access the TTP level of the MAP and post the Line Test Unit to be replaced by typing

`>MAPCI;MTC;TRKS;TTP;POST T LTU ltu_no`

and pressing the Enter key.

where

ltu_no
is the number of the faulty LTU

Example of a MAP response:

```
LAST CIRCUIT = 27
POST CKT IDLED
SHORT CLLI IS:  LTU
OK, CLLI POSTED

POST       DELQ       BUSY Q          DIG
TTP 6-006
CKT TYPE   PM NO.     COM LANG        STA S R DOT TE R
OG         RMM 0 0     LTU   21       IDL
```

3 Busy the trunks that are associated with the card to be replaced by typing

`>BSY`

and pressing the Enter key.

NT2X10 in an RLCM RMM (end)

At the RMM shelf

4

WARNING
Static electricity damage
Wear a wrist strap connected to the wrist strap grounding point of a frame supervisory panel (FSP) while handling circuit cards. This protects the cards against damage caused by static electricity.

Replace the NT2X10 card using the replacing a card procedure in this document. When you have completed the procedure, return to this point.

At the MAP display

5 Test the new NT2X10 card by typing

>TST

and pressing the Enter key.

If TST	Do
passed	step 6
failed	step 9

6 Return to service the circuits busied in step 3 by typing

>RTS

and pressing the Enter key.

If RTS	Do
passed	step 7
failed	step 9

7 Send any faulty cards for repair according to local procedure.

8 Record the following items in office records:

- date the card was replaced
- serial number of the card
- symptoms that prompted replacement of the card

Go to step 10.

9 Obtain further assistance in replacing this card by contacting the personnel responsible for higher level of support.

10 You have completed this procedure.

NT2X10 in an RSC RMM

Application

Use this procedure to replace the following card in an RSC RMM.

PEC	Suffixes	Name
NT2X10	AB	Line test unit (LTU) analog test and measurement card
NT2X10	BA	Multi line test unit (MTU) analog test and measurement card

Common Procedures

None

Action

The following flowchart is a summary of the procedure. To replace the card, use the instructions in the procedure that follows the flowchart.

NT2X10
in an RSC RMM (continued)

Summary of card replacement procedure for an NT0X10 card in an RSC RMM

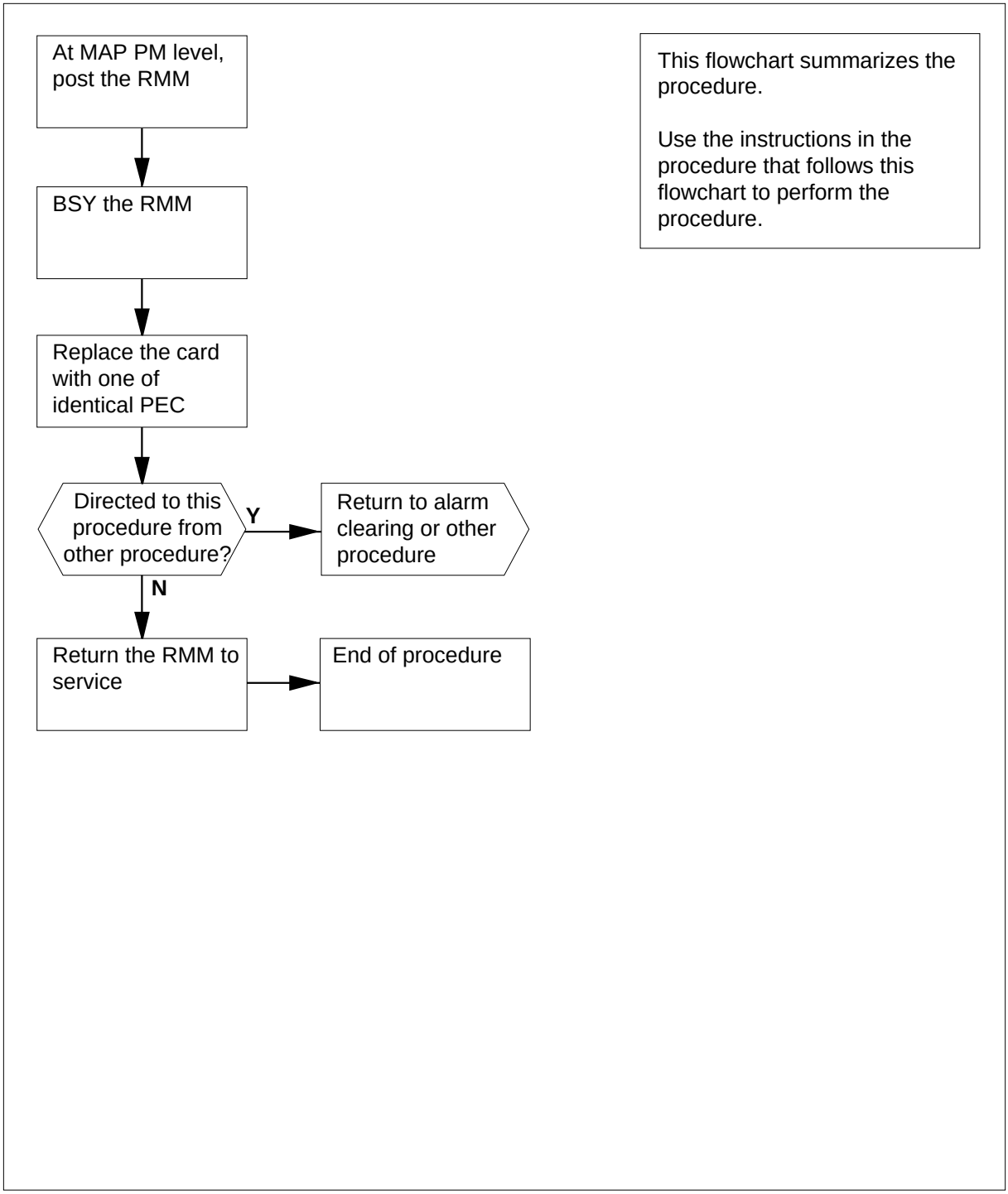

NT2X10 in an RSC RMM (continued)

Replacing an NT2X10 card in RSC RMM

At your current location

1 Proceed only if you were either directed to this card replacement procedure from a step in a maintenance procedure, are using the procedure to verify or accept cards, or were directed to this procedure by your maintenance support group.

2 Obtain a replacement card. Ensure the replacement card has the same product equipment code (PEC) including suffix, as the card to be removed.

At the MAP display

3 Access the PM level and post the RMM by typing

>MAPCI;MTC;PM;POST RMM rmm_no

and pressing the Enter key.

where

rmm_no
is the number of the RMM where the card is to be removed

Example of a MAP display:

```
   CM    MS    IOD    Net    PM    CCS    LNS    Trks    Ext    APPL
   .     .      .      .    4SysB   .      .      .       .      .

RMM               SysB     ManB     OffL     CBsy     ISTb      InSv
 0 Quit    PM        4        0       10        3        3       130
 2 Post_   RMM       0        1        1        0        0         2
 3
 4         RMM  5  INSV
 5 Trnsl
 6 Tst
 7 Bsy
 8 RTS
 9 OffL
10 LoadPM
11 Disp_
12 Next
13
14 QueryPM
15
16
17
18
```

4 Busy the RMM by typing

>BSY

and pressing the Enter key.

Example of a MAP display:

NT2X10
in an RSC RMM (continued)

```
   CM    MS    IOD    Net    PM    CCS    LNS    Trks    Ext    APPL
   .     .      .      .    4SysB   .      .       .      .      .

RMM               SysB     ManB     OffL     CBsy     ISTb      InSv
 0 Quit    PM        4        0       10        3        3       130
 2 Post_   RMM       0        1        1        0        0         2
 3
 4         RMM  5  ManB
 5 Trnsl
 6 Tst
 7 Bsy
 8 RTS
 9 OffL
10 LoadPM
11 Disp_
12 Next
13
14 QueryPM
15
16
17
18
```

At the RMM shelf

5

CAUTION
Static discharge may cause damage to circuit packs
Put on a wrist strap and connect it to the frame of the RMM before removing any cards. This protects the RMM against service degradation caused by static electricity.

Put on a wrist strap.

6

DANGER
Equipment damage
Take these precautions when removing or inserting a card:

1. Do not apply direct pressure to the components.
2. Do not force the cards into the slots.

Remove the NT2X10 card as shown in the following figures.

a Locate the card to be removed on the appropriate shelf.

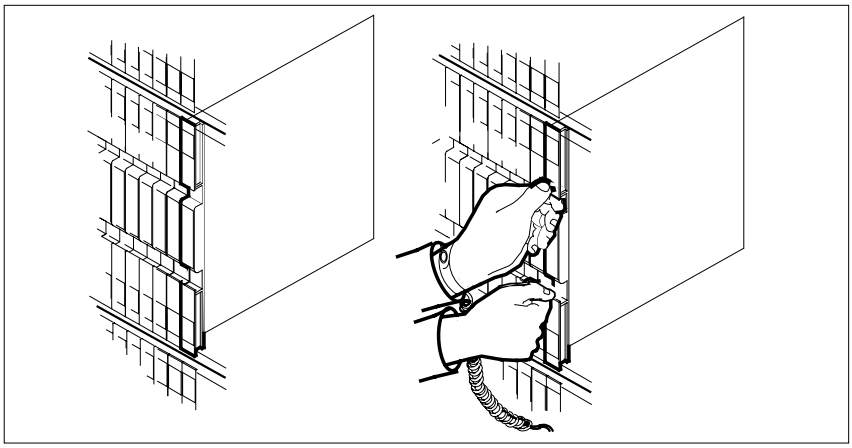

b Open the locking levers on the card to be replaced and gently pull the card towards you until it clears the shelf.

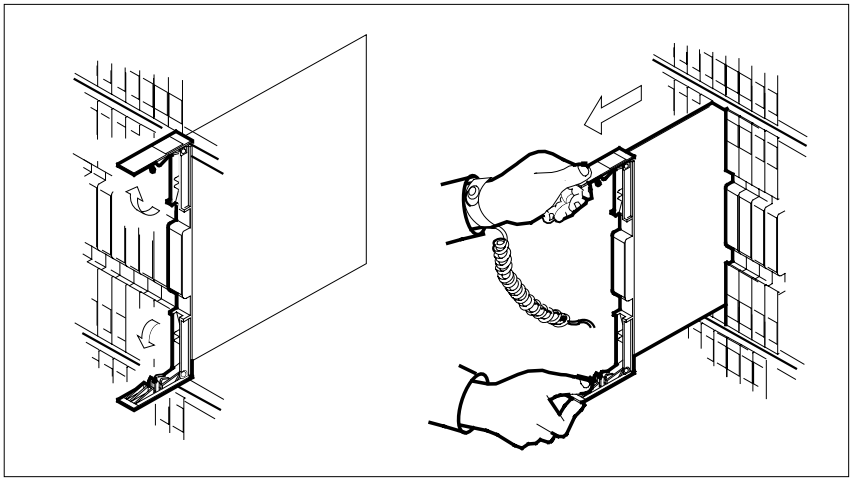

c Ensure the replacement card has the same PEC including suffix, as the card you just removed.

7 Open the locking levers on the replacement card.

Align the card with the slots in the shelf and gently slide the card into the shelf.

NT2X10
in an RSC RMM (continued)

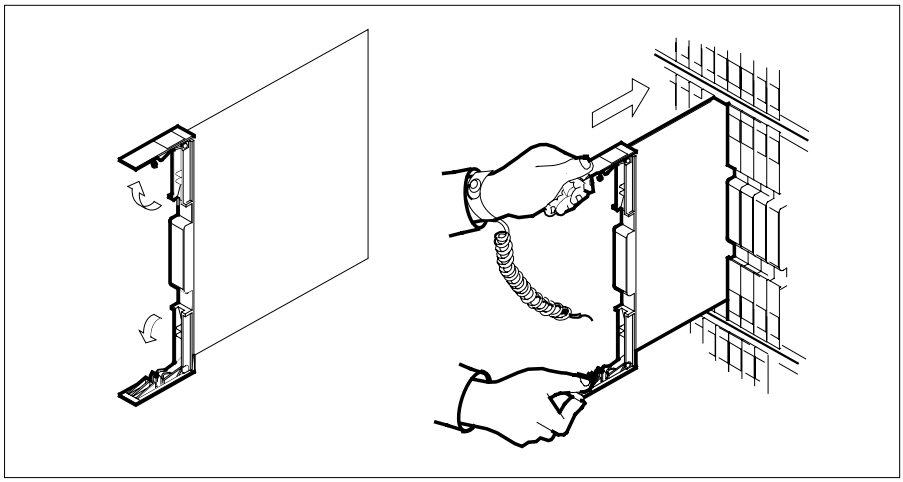

8 Seat and lock the card.

a Using your fingers or thumbs, push on the upper and lower edges of the faceplate to ensure that the card is fully seated in the shelf.

b Close the locking levers.

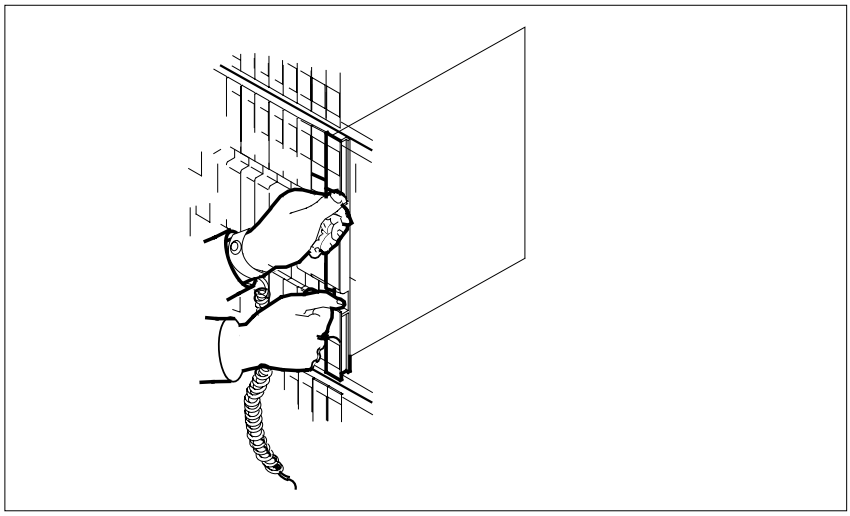

9 Use the following information to determine the next step in this procedure.

If you entered this procedure from	Do
an alarm clearing procedure	step 15
other	step 10

NT2X10 in an RSC RMM (end)

At the MAP display

10 Test the RMM by typing

>TST

and pressing the Enter key.

Example of a MAP response:

```
Test Passed
```

or

```
Test Failed
```

If the TST	Do
passes	step 11
fails	step 15

11 Return the RMM to service by typing

>RTS

and pressing the Enter key.

If the RTS	Do
passes	step 12
fails	step 16

12 Send any faulty cards for repair according to local procedure.

13 Record the following items in office records:

- date the card was replaced
- serial number of the card
- symptoms that prompted replacement of the card

14 Go to step 17.

15 Return to the *Alarm Clearing Procedure* that directed you to this card replacement procedure. If necessary, go to the point where the faulty card list was produced, identify the next faulty card on the list, and go to the appropriate replacement procedure in this manual for that card.

16 Obtain further assistance in replacing this card by contacting personnel responsible for higher level of support.

17 You have successfully completed this procedure. Return to the maintenance procedure that directed you to this card replacement procedure and continue as directed.

NT2X10 in an RSC-S (DS-1) Model A RMM

Application

Use this procedure to replace an NT2X10 card in an RSC-S RMM.

PEC	Suffixes	Name
NT2X10	BA	Line Test Unit (analog)

Common procedures

None

Action

The following flowchart is only a summary of the procedure. To replace the card, use the instructions in the procedure that follows the flowchart.

NT2X10 in an RSC-S (DS-1) Model A RMM (continued)

Summary of card replacement procedure for an NT2X10 card in RSC-S RMM

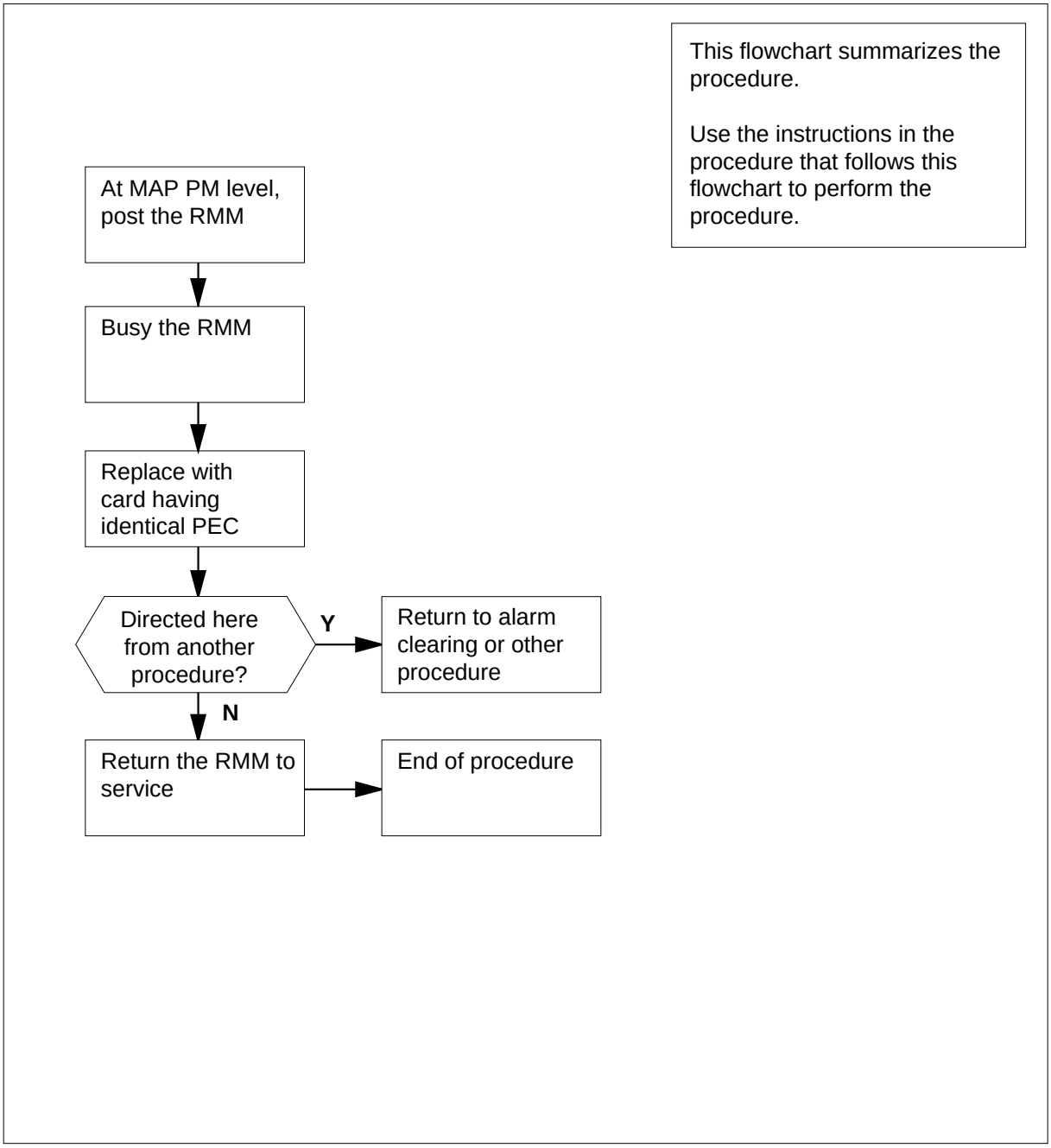

NT2X10 in an RSC-S (DS-1) Model A RMM (continued)

Replacing an NT2X10 card in RSC-S RMM

At your current location

1 Proceed only if you have been directed to this card replacement procedure from a step in a maintenance procedure, are using the procedure for verifying or accepting cards, or have been directed to this procedure by your maintenance support group.

2 Obtain an NT2X10 replacement card. Ensure the replacement card has the same product equipment code (PEC), including suffix, as the card that is to be removed.

At the MAP terminal

3 Set the MAP display to the PM level and post the RMM by typing

>MAPCI;MTC;PM;POST RMM rmm_no

and pressing the Enter key.

where

rmm_no
is the number of the RMM where the card is to be removed

Example of MAP display:

```
 CM    MS     IOD     Net     PM     CCS     LNS    Trks    Ext   Appl
 .      .      .       .       .      .       .       .      .      .

RMM               SysB     ManB     OffL     CBsy     ISTb      InSv
 0 Quit    PM        0        0        0        0        0       130
 2 Post_   RMM       0        0        0        0        0         0
 3
 4         RMM  5  INSV
 5 Trnsl
 6 Tst
 7 Bsy
 8 RTS
 9 OffL
10 LoadPM
11 Disp_
12 Next
13
14 QueryPM
15
16
17
18
```

4 Busy the RMM by typing

>BSY

and pressing the Enter key.

Example of a MAP display:

```
 CM     MS     IOD     Net    PM    CCS    LNS    Trks    Ext    Appl
 .      .       .       .    1ManB  .      .       .      .       .

RMM               SysB     ManB     OffL     CBsy     ISTb      InSv
 0 Quit    PM        4        0       10        0        0       130
 2 Post_   RMM       0        1        0        0        0         0
 3
 4         RMM  5  ManB
 5 Trnsl
 6 Tst
 7 Bsy
 8 RTS
 9 OffL
10 LoadPM
11 Disp_
12 Next
13
14 QueryPM
15
16
17
18
```

At the RMM shelf

5

CAUTION
Static discharge may cause damage to circuit packs
Put on a wrist strap and connect it to the frame of the RMM before removing any cards. This protects the RMM against service degradation caused by static electricity.

Put on a wrist strap.

6 Remove the NT2X10 card as shown in the following figures.

a Locate the card to be removed on the appropriate shelf.

NT2X10
in an RSC-S (DS-1) Model A RMM (continued)

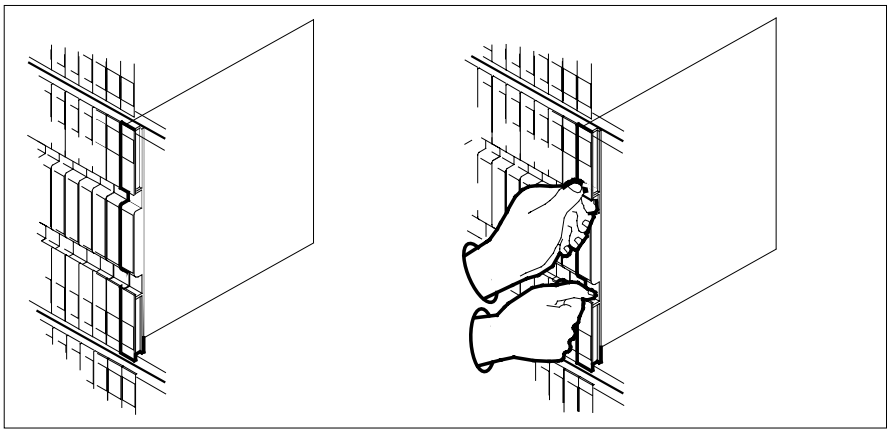

b Open the locking levers on the card to be replaced and gently pull the card toward you until it clears the shelf.

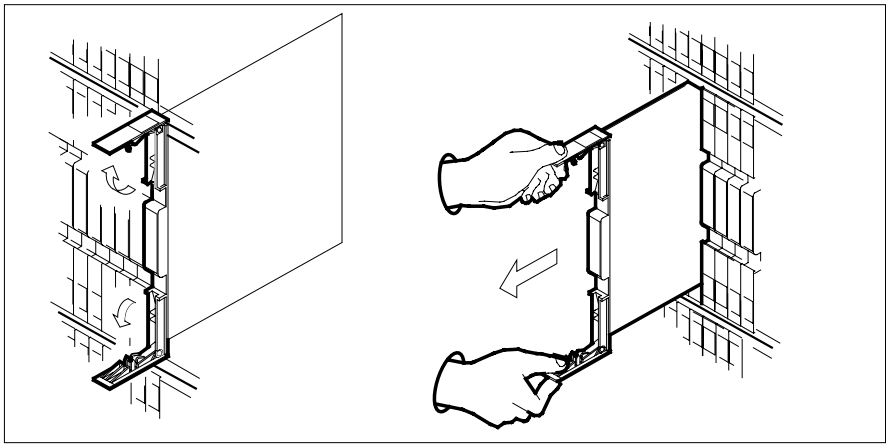

c Ensure the replacement card has the same PEC, including suffix, as the card you just removed.

7 Open the locking levers on the replacement card.

a Align the card with the slots in the shelf.

b Gently slide the card into the shelf.

NT2X10
in an RSC-S (DS-1) Model A RMM (continued)

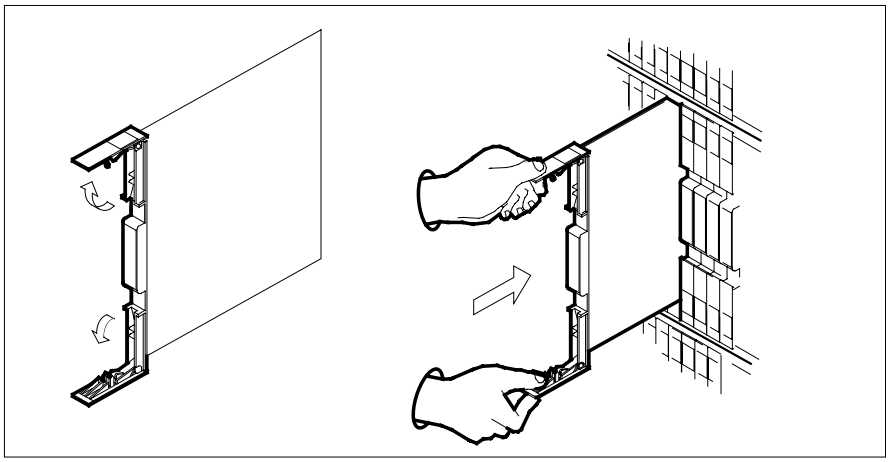

8

DANGER
Equipment damage
Take these precautions when removing or inserting a card:

1. Do not apply direct pressure to the components.
2. Do not force the card into its slot.

Seat and lock the card.

a Using your fingers or thumbs, push on the upper and lower edges of the faceplate to ensure the card is fully seated in the shelf.

b Close the locking levers.

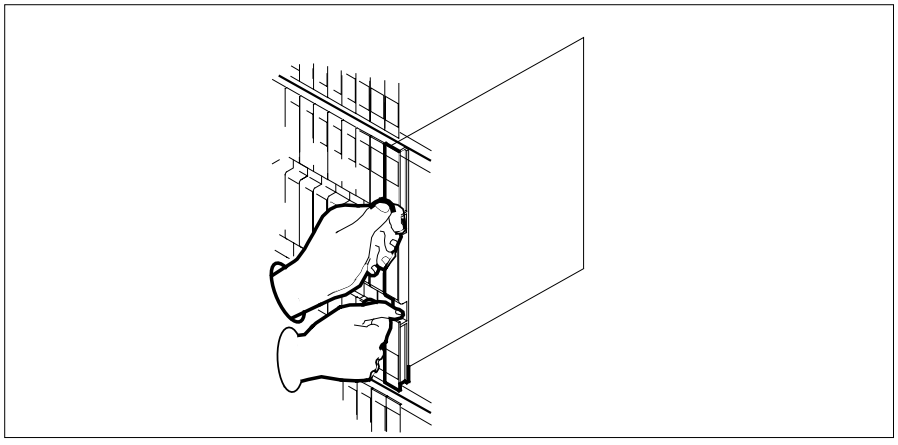

NT2X10 in an RSC-S (DS-1) Model A RMM (end)

9 Use the following information to determine where to proceed.

If you entered this procedure from	Do
alarm clearing procedures	step 14
other	step 10

At the MAP terminal

10 Test the RMM by typing

>TST

and pressing the Enter key.

If TST	Do
passed	step 11
failed	step 14

11 Return the RMM to service by typing

>RTS

and pressing the Enter key.

If RTS	Do
passed	step 12
failed	step 15

12 Send any faulty cards for repair according to local procedure.

13 Record the date the card was replaced, the serial number of the card, and the symptoms the prompted replacement of the card. Go to step 16.

14 Return to the procedure that directed you to this procedure. At the point where a faulty card list was produced, identify the next faulty card on the list and go to the appropriate card replacement procedure for that card in this manual.

15 Obtain further assistance in replacing this card by contacting operating company maintenance personnel.

16 You have successfully completed this procedure. Return to the maintenance procedure that directed you to this card replacement procedure and continue as directed.

NT2X10 in an RSC-S (DS-1) Model B RMM

Application

Use this procedure to replace an NT2X10 card in an RSC-S RMM.

PEC	Suffixes	Name
NT2X10	BA	Line Test Unit (analog)

Common procedures

None

Action

The following flowchart is only a summary of the procedure. To replace the card, use the instructions in the procedure that follows the flowchart.

NT2X10
in an RSC-S (DS-1) Model B RMM (continued)

Summary of card replacement procedure for an NT2X10 card in RSC-S RMM

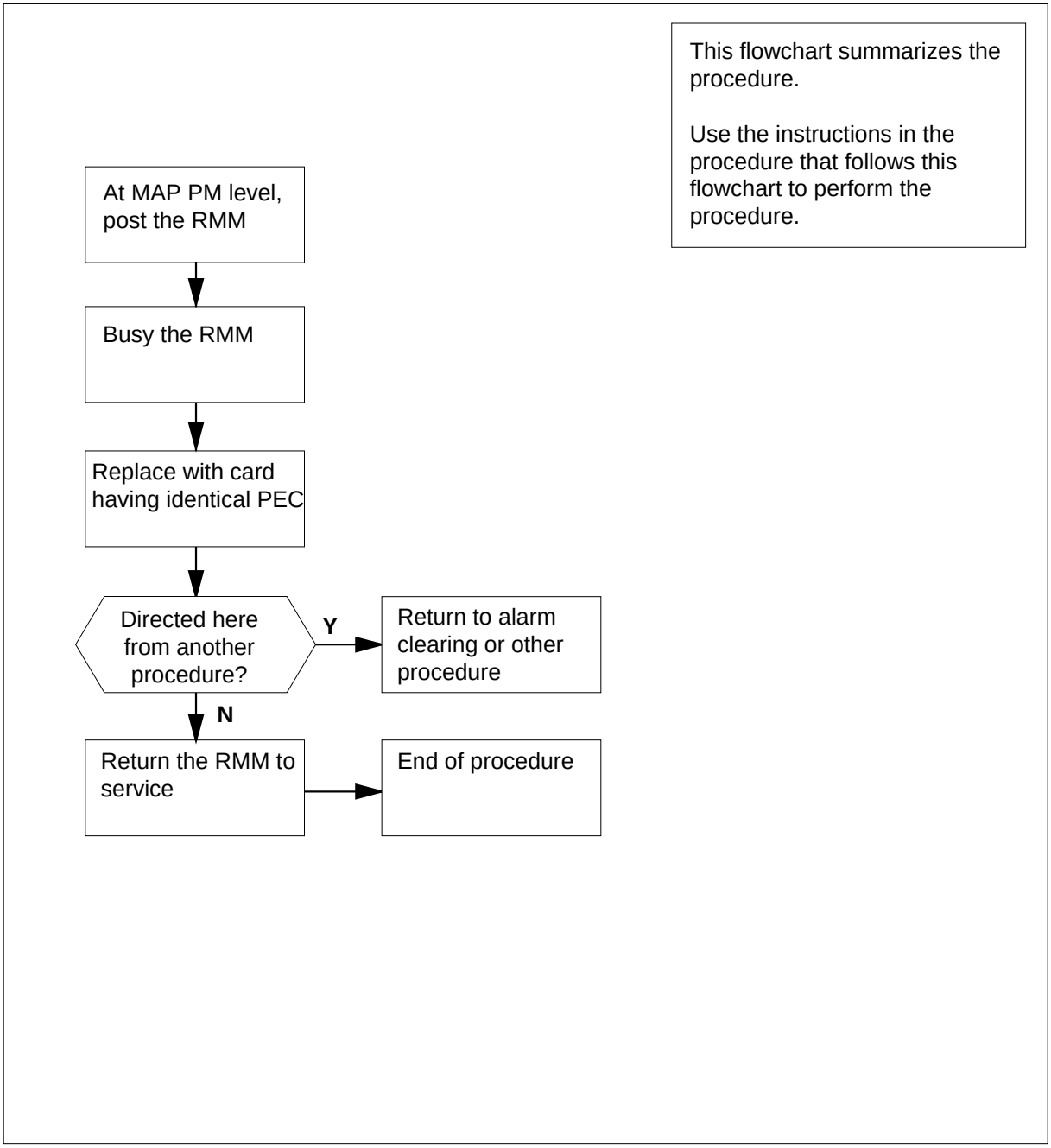

NT2X10 in an RSC-S (DS-1) Model B RMM (continued)

Replacing an NT2X10 card in RSC-S RMM

At your current location

1 Proceed only if you have been directed to this card replacement procedure from a step in a maintenance procedure, are using the procedure for verifying or accepting cards, or have been directed to this procedure by your maintenance support group.

2 Obtain an NT2X10 replacement card. Ensure the replacement card has the same product equipment code (PEC), including suffix, as the card that is to be removed.

At the MAP terminal

3 Set the MAP display to the PM level and post the RMM by typing

>MAPCI;MTC;PM;POST RMM rmm_no

and pressing the Enter key.

where

rmm_no
is the number of the RMM where the card is to be removed

Example of MAP display:

```
 CM    MS     IOD     Net     PM     CCS     LNS    Trks    Ext    Appl
 .      .      .       .       .      .       .       .      .       .

RMM               SysB     ManB     OffL     CBsy     ISTb      InSv
 0 Quit    PM        0        0        0        0        0       130
 2 Post_   RMM       0        0        0        0        0         0
 3
 4         RMM  5  INSV
 5 Trnsl
 6 Tst
 7 Bsy
 8 RTS
 9 OffL
10 LoadPM
11 Disp_
12 Next
13
14 QueryPM
15
16
17
18
```

4 Busy the RMM by typing

>BSY

NT2X10 in an RSC-S (DS-1) Model B RMM (continued)

and pressing the Enter key.

Example of a MAP display:

```
 CM     MS     IOD     Net    PM    CCS    LNS    Trks     Ext    Appl
 .      .       .       .    1ManB  .      .       .       .       .

RMM               SysB     ManB     OffL     CBsy     ISTb      InSv
 0 Quit    PM        4        0       10        0        0       130
 2 Post_   RMM       0        1        0        0        0         0
 3
 4         RMM  5  ManB
 5 Trnsl
 6 Tst
 7 Bsy
 8 RTS
 9 OffL
10 LoadPM
11 Disp_
12 Next
13
14 QueryPM
15
16
17
18
```

At the RMM shelf

5

CAUTION
Static discharge may cause damage to circuit packs
Put on a wrist strap and connect it to the frame of the RMM before removing any cards. This protects the RMM against service degradation caused by static electricity.

Put on a wrist strap.

6 Remove the NT2X10 card as shown in the following figures.

a Locate the card to be removed on the appropriate shelf.

NT2X10
in an RSC-S (DS-1) Model B RMM (continued)

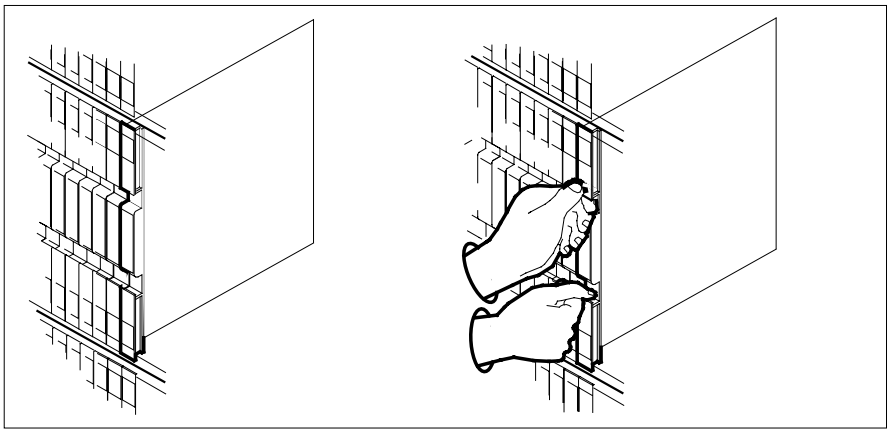

b Open the locking levers on the card to be replaced and gently pull the card toward you until it clears the shelf.

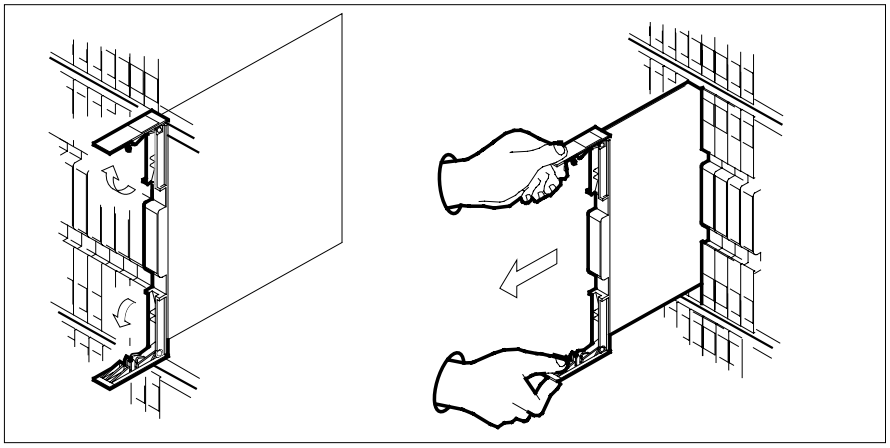

c Ensure the replacement card has the same PEC, including suffix, as the card you just removed.

7 Open the locking levers on the replacement card.

a Align the card with the slots in the shelf.

b Gently slide the card into the shelf.

NT2X10
in an RSC-S (DS-1) Model B RMM (continued)

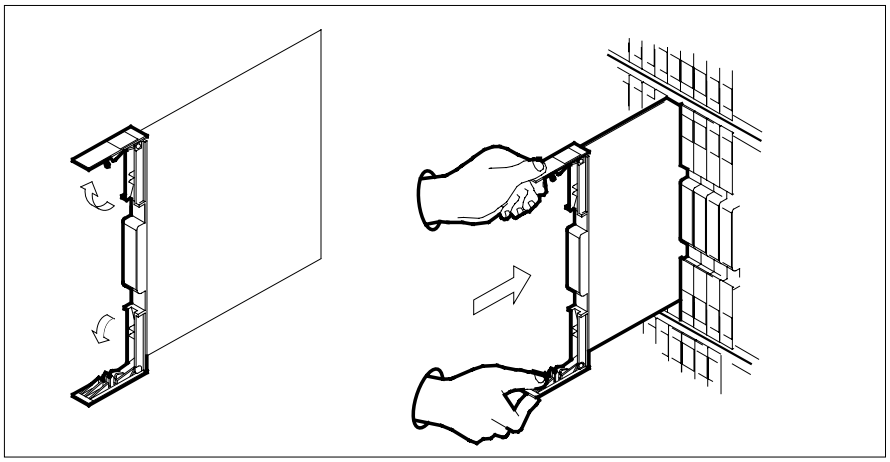

8

DANGER
Equipment damage
Take these precautions when removing or inserting a card:

1. Do not apply direct pressure to the components.
2. Do not force the card into its slot.

Seat and lock the card.

a Using your fingers or thumbs, push on the upper and lower edges of the faceplate to ensure the card is fully seated in the shelf.

b Close the locking levers.

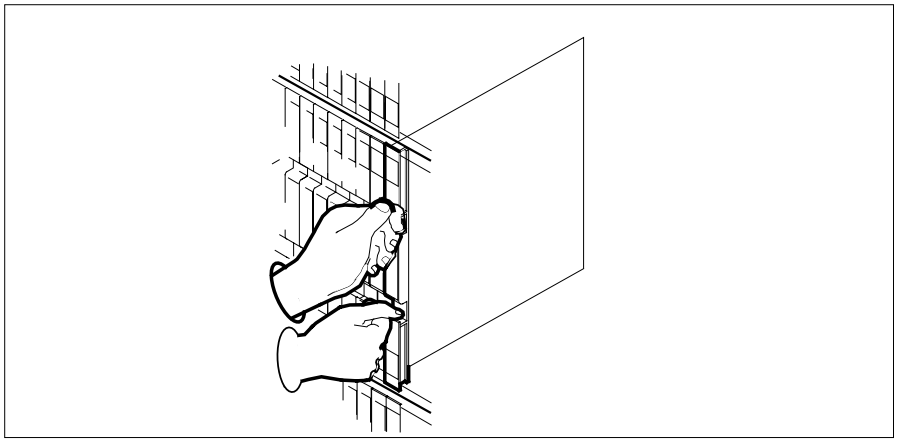

NT2X10 in an RSC-S (DS-1) Model B RMM (end)

9 Use the following information to determine where to proceed.

If you entered this procedure from	Do
alarm clearing procedures	step 14
other	step 10

At the MAP terminal

10 Test the RMM by typing

>TST

and pressing the Enter key.

If TST	Do
passed	step 11
failed	step 14

11 Return the RMM to service by typing

>RTS

and pressing the Enter key.

If RTS	Do
passed	step 12
failed	step 15

12 Send any faulty cards for repair according to local procedure.

13 Record the date the card was replaced, the serial number of the card, and the symptoms the prompted replacement of the card. Go to step 16.

14 Return to the procedure that directed you to this procedure. At the point where a faulty card list was produced, identify the next faulty card on the list and go to the appropriate card replacement procedure for that card in this manual.

15 Obtain further assistance in replacing this card by contacting operating company maintenance personnel.

16 You have successfully completed this procedure. Return to the maintenance procedure that directed you to this card replacement procedure and continue as directed.

NT2X10 in an RSC-S (PCM-30) Model A RMM

Application

Use this procedure to replace an NT2X10 card in an RSC-S RMM.

PEC	Suffixes	Name
NT2X10	BA	Line Test Unit (analog)

Common procedures

None

Action

The following flowchart is only a summary of the procedure. To replace the card, use the instructions in the procedure that follows the flowchart.

NT2X10
in an RSC-S (PCM-30) Model A RMM (continued)

Summary of card replacement procedure for an NT2X10 card in RSC-S RMM

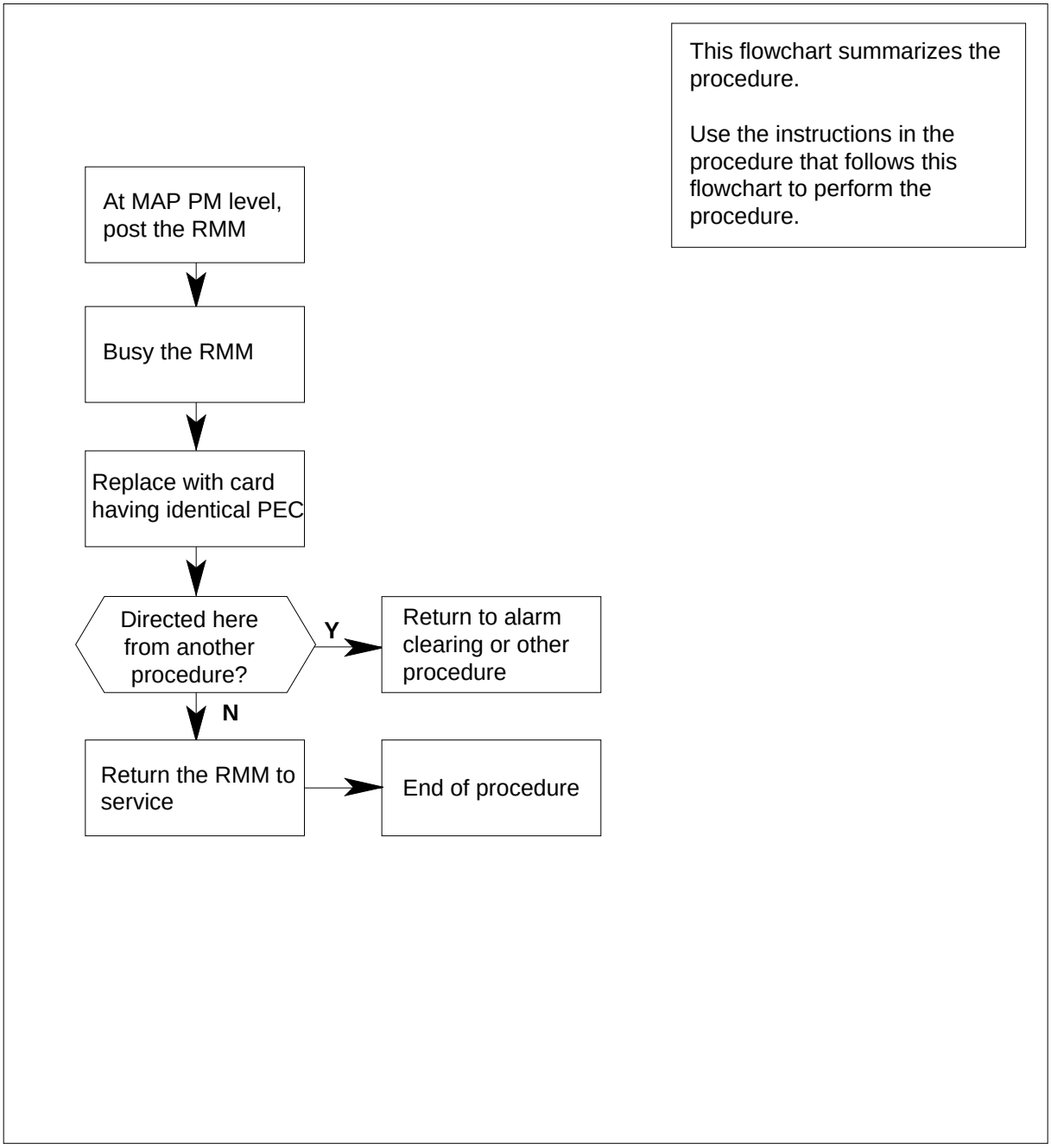

NT2X10
in an RSC-S (PCM-30) Model A RMM (continued)

Replacing an NT2X10 card in RSC-S RMM

1 Proceed only if you have been directed to this card replacement procedure from a step in a maintenance procedure, are using the procedure for verifying or accepting cards, or have been directed to this procedure by your maintenance support group.

2 Obtain an NT2X10 replacement card. Ensure the replacement card has the same product equipment code (PEC), including suffix, as the card that is to be removed.

At the MAP terminal

3 Set the MAP display to the PM level and post the RMM by typing

>MAPCI;MTC;PM;POST RMM rmm_no

and pressing the Enter key.

where

rmm_no
is the number of the RMM where the card is to be removed

Example of MAP display:

```
 CM    MS     IOD     Net     PM     CCS     LNS    Trks     Ext    Appl
 .      .      .       .      .      .       .       .       .       .
RMM              SysB     ManB     OffL     CBsy     ISTb      InSv
 0 Quit    PM        0        0        0        0        0       130
 2 Post_   RMM       0        0        0        0        0         0
 3
 4         RMM  5  INSV
 5 Trnsl
 6 Tst
 7 Bsy
 8 RTS
 9 OffL
10 LoadPM
11 Disp_
12 Next
13
14 QueryPM
15
16
17
18
```

4 Busy the RMM by typing

>BSY

and pressing the Enter key.

Example of a MAP display:

```
 CM     MS     IOD     Net    PM    CCS    LNS    Trks     Ext     Appl
 .      .       .       .    1ManB  .      .       .        .        .
RMM              SysB     ManB     OffL     CBsy     ISTb      InSv
 0 Quit    PM        4        0       10        0        0       130
 2 Post_   RMM       0        1        0        0        0         0
 3
 4         RMM  5  ManB
 5 Trnsl
 6 Tst
 7 Bsy
 8 RTS
 9 OffL
10 LoadPM
11 Disp_
12 Next
13
14 QueryPM
15
16
17
18
```

At the RMM shelf

5

CAUTION
Static discharge may cause damage to circuit packs
Put on a wrist strap and connect it to the frame of the RMM before removing any cards. This protects the RMM against service degradation caused by static electricity.

Put on a wrist strap.

6 Remove the NT2X10 card as shown in the following figures.

a Locate the card to be removed on the appropriate shelf.

NT2X10
in an RSC-S (PCM-30) Model A RMM (continued)

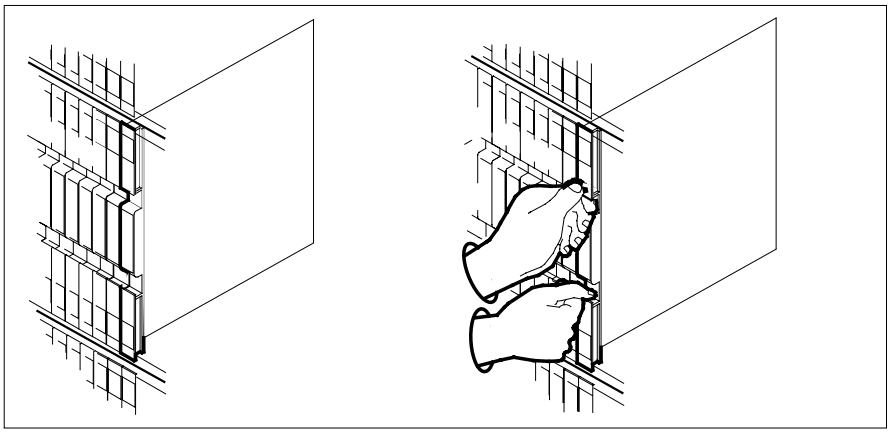

b Open the locking levers on the card to be replaced and gently pull the card toward you until it clears the shelf.

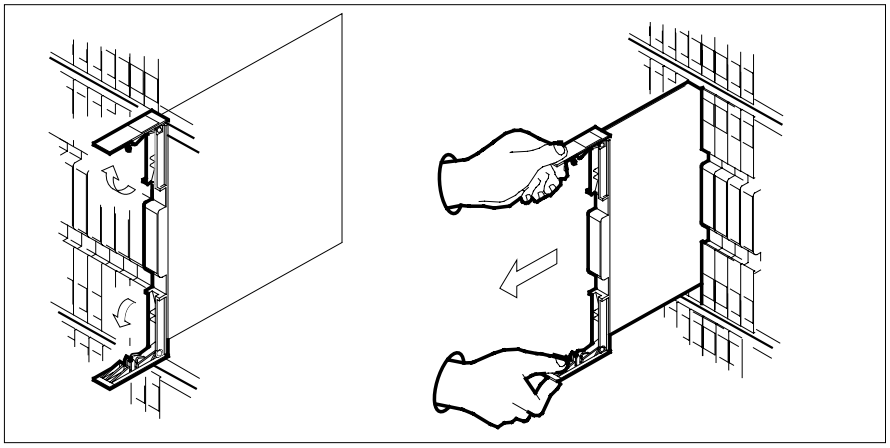

c Ensure the replacement card has the same PEC, including suffix, as the card you just removed.

7 Open the locking levers on the replacement card.

a Align the card with the slots in the shelf.

b Gently slide the card into the shelf.

NT2X10
in an RSC-S (PCM-30) Model A RMM (continued)

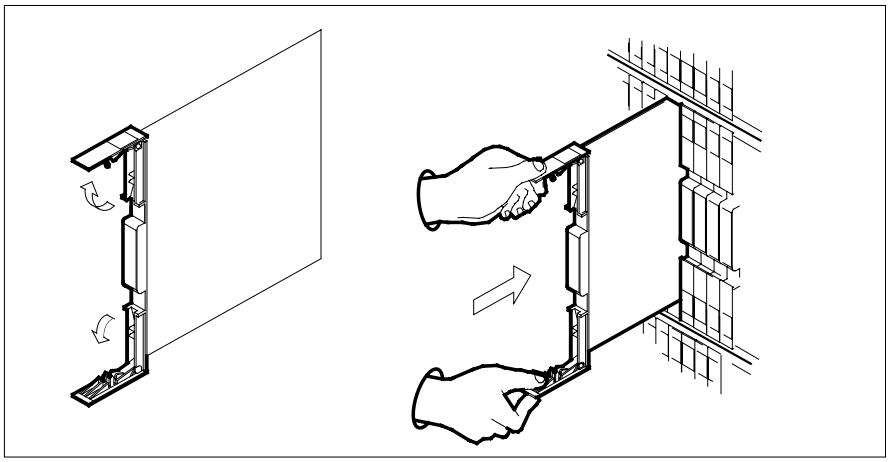

8

DANGER
Equipment damage
Take these precautions when removing or inserting a card:

1. Do not apply direct pressure to the components.
2. Do not force the card into its slot.

Seat and lock the card.

a Using your fingers or thumbs, push on the upper and lower edges of the faceplate to ensure the card is fully seated in the shelf.

b Close the locking levers.

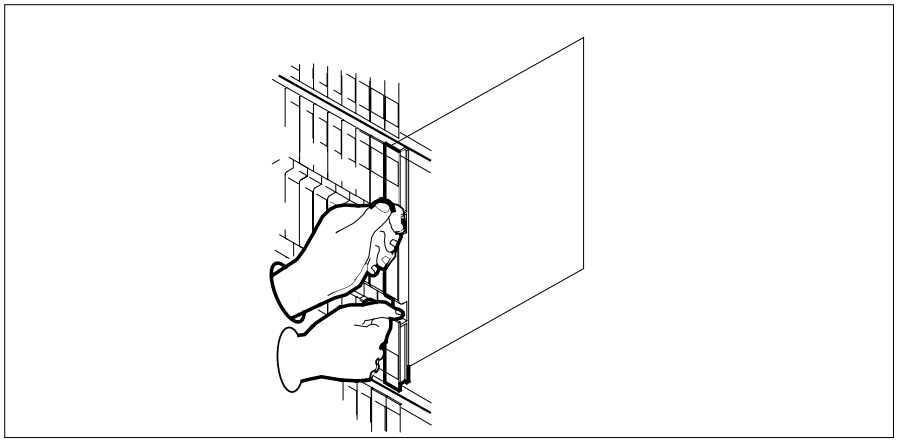

NT2X10 in an RSC-S (PCM-30) Model A RMM (end)

9 Use the following information to determine where to proceed.

If you entered this procedure from	Do
alarm clearing procedures	step 14
other	step 10

At the MAP terminal

10 Test the RMM by typing

>TST

and pressing the Enter key.

If TST	Do
passed	step 11
failed	step 14

11 Return the RMM to service by typing

>RTS

and pressing the Enter key.

If RTS	Do
passed	step 12
failed	step 15

12 Send any faulty cards for repair according to local procedure.

13 Record the date the card was replaced, the serial number of the card, and the symptoms the prompted replacement of the card. Go to step 16.

14 Return to the procedure that directed you to this procedure. At the point where a faulty card list was produced, identify the next faulty card on the list and go to the appropriate card replacement procedure for that card in this manual.

15 Obtain further assistance in replacing this card by contacting operating company maintenance personnel.

16 You have successfully completed this procedure. Return to the maintenance procedure that directed you to this card replacement procedure and continue as directed.

NT2X11 in an OPAC RMM

Application

Use this procedure to replace an NT2X11 in a remote maintenance module (RMM).

PEC	Suffix	Name
NT2X11	AA	Line test unit digital card
NT2X11	AB	Multiline test unit digital card

Common procedures

The replacing a card procedure is referenced in this procedure.

Action

The following flowchart is a summary of the procedure. To replace the card, use the instructions in the step-action procedure that follows the flowchart.

NT2X11
in an OPAC RMM (continued)

Summary of card replacement procedure for an NT2X11 in an RMM

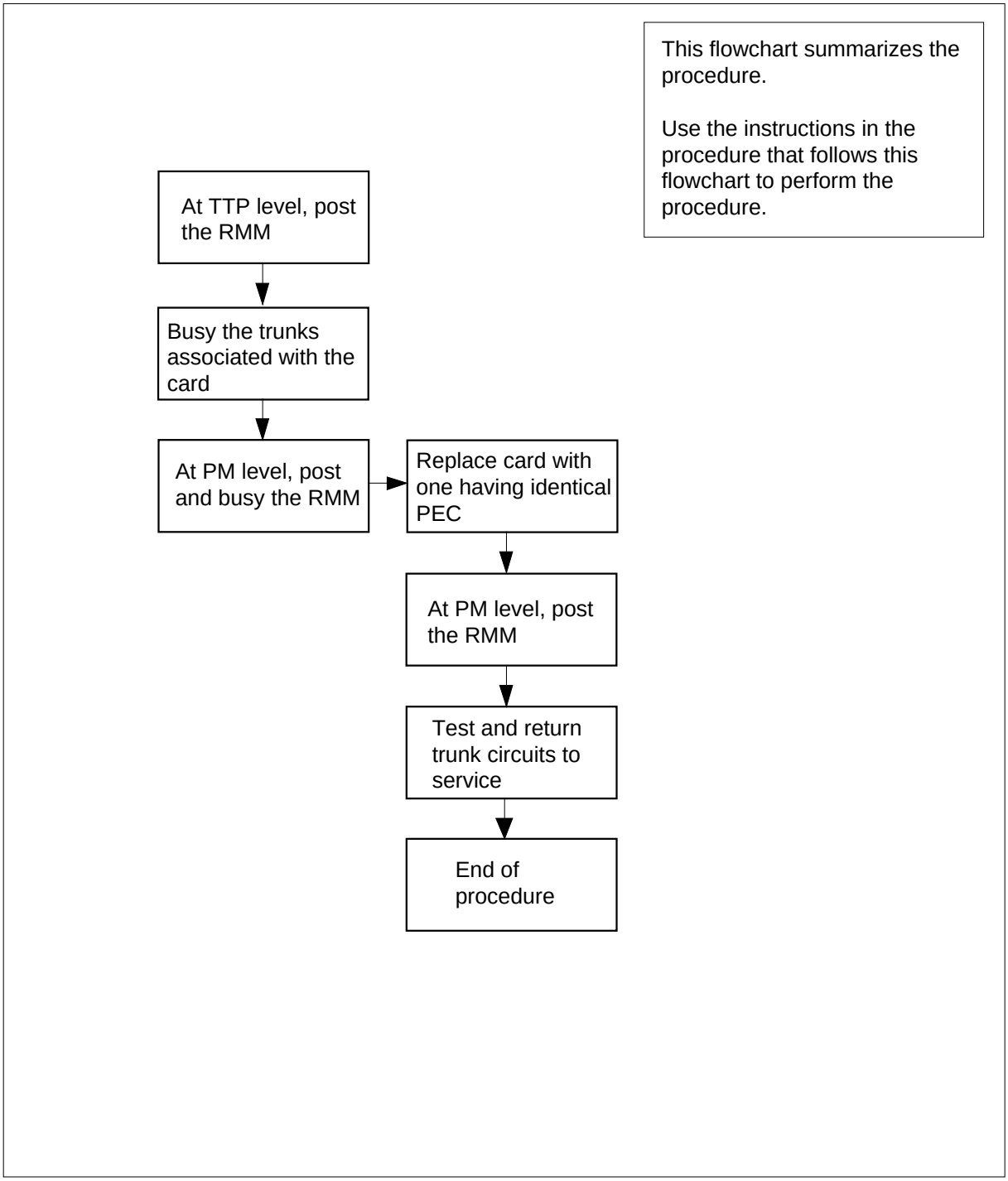

Replacing an NT2X11 in an RMM

At your Current Location

1 Obtain a replacement card. Ensure the replacement card has the same product equipment code (PEC), including suffix, as the card to be removed.

At the MAP terminal

2 Access the trunk test position (TTP) level of the MAP display and post the RMM that contains the card to be replaced by typing

>MAPCI;MTC;TRKS;TTP;POST P RMM rmm_no

and pressing the Enter key.

where

rmm_no
is the number of the RMM shelf where the card is to be replaced

Example of a MAP response:

```
POST  20   DELQ       BUSY Q          DIG
TTP 6-006
CKT TYPE   PM NO.     COM LANG        STA S R DOT
TE R
OG    MF RMM 0 0  LTU                 LO
                                      P_IDL

LAST CIRCUIT = 27
POST CKT IDLED
SHORT CLLI IS:  OTDA00
OK, CLLI POSTED
```

3 Ensure the card being pulled is the correct card and is pulled from the correct card slot by typing

>CKTLOC

and pressing the Enter key.

4 Busy the trunks associated with the card to be replaced by typing

>BSY ALL

and pressing the Enter key.

NT2X11 in an OPAC RMM (continued)

At the RMM

5

WARNING
Static electricity damage
Wear a wrist strap connected to the wrist strap grounding point at the top of each equipment rack, (Bay 0, 1, 2, and 3), while handling circuit cards. This protects the cards against damage caused by static electricity.

Replace the NT2X11 card using the common replacing a card procedure in this document. When you have completed the procedure, return here.

At the MAP terminal

6 Post the RMM trunk circuits by typing

`>POST P RMM rmm_no ckt_no to ckt_no`

and pressing the Enter key.

where

rmm_no
is the number of the RMM shelf where the card is to be replaced

ckt_no
is the number of the trunk circuit associated with the card to be replaced

7 Go to the PM level of the MAP screen, place the first circuit in a hold position and test the second circuit by typing

`>HOLD`

and pressing the Enter key

and then typing

`>TST`

and pressing the Enter key.

If TST	Do
passed	step 8
failed	step 14

8 Return to service the circuit tested by typing

`>RTS`

and pressing the Enter key.

If RTS	Do
passed	step 9
failed	step 14

9 Place the untested circuit in the control position by typing

```
>NEXT 1
```

and pressing the Enter key.

10 Test the circuit by typing

```
>TST
```

If TST	Do
passed	step 11
failed	step 14

11 Return to service and clear the trunk tesr position by typing

```
>RTS;NEXT
```

12 Send any faulty cards for repair according to local procedure.

13 Record the following items in office records:

- date the card was replaced
- serial number of the card
- symptoms that prompted replacement of the card

Go to step 15.

14 Obtain further assistance in replacing this card by contacting the personnel responsible for higher level of support.

15 You have completed this procedure.

NT2X11 in an OPM RMM

Application

Use this procedure to replace the following card in an RMM.

PEC	Suffixes	Name
NT2X11	AA, AB, AC, AD, BA	Line Test Unit Digital Card (LTUD)

Common procedures

The replacing a card procedure is referenced in this procedure.

Action

The following flowchart is a summary of the procedure. To replace the card, use the instructions in the procedure that follows the flowchart.

NT2X11
in an OPM RMM (continued)

Summary of card replacement procedure for an NT2X11 card in an RMM

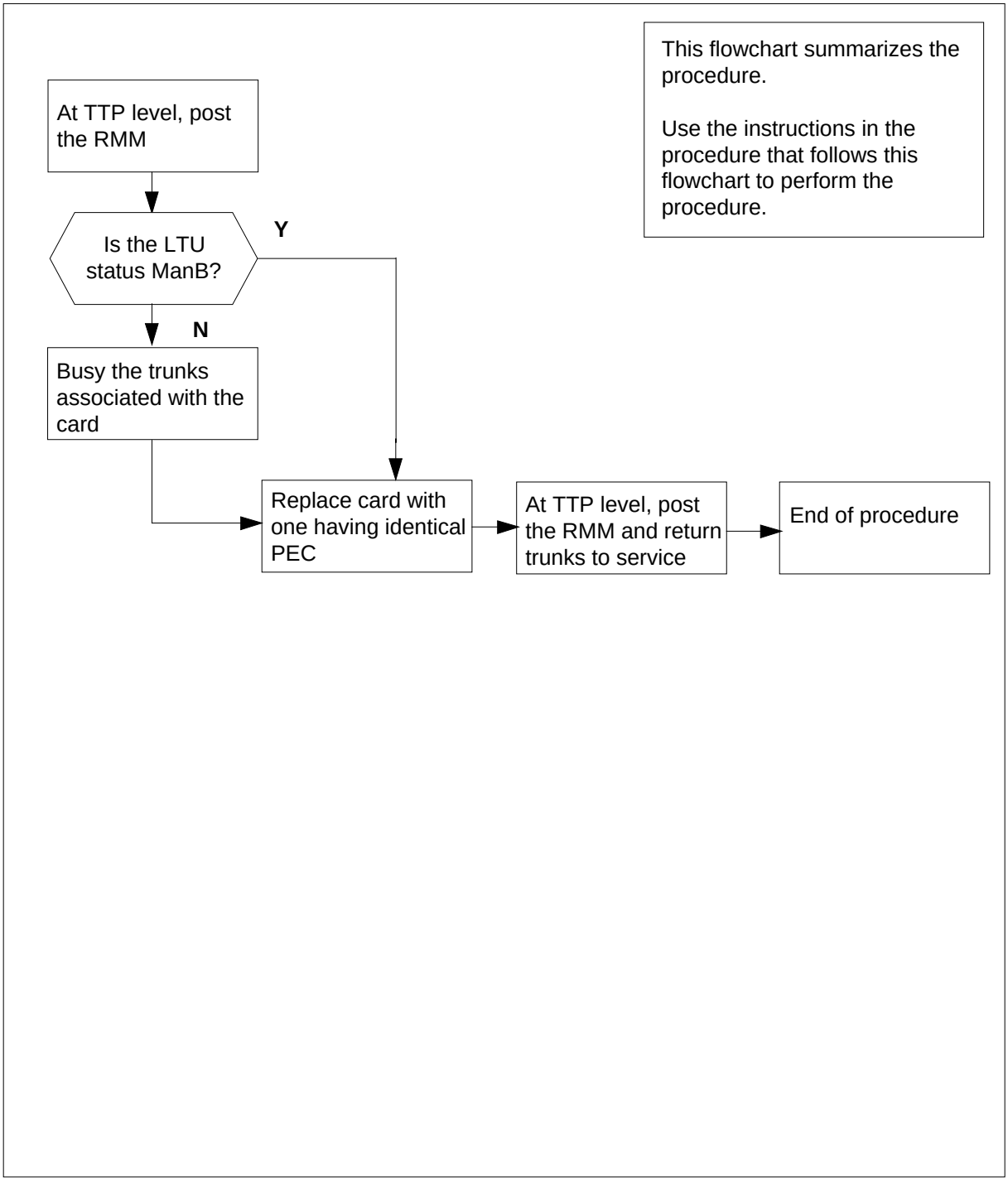

NT2X11
in an OPM RMM (continued)

Replacing an NT2X11 card in an RMM

At your current location

1 Obtain a replacement card. Ensure that the replacement card has the same product equipment code (PEC), including suffix, as the card to be removed.

At the MAP display

2 Access the TTP level of the MAP and post the line test unit to be replaced by typing

>MAPCI;MTC;TRKS;TTP;POST T LTU ltu_no

and pressing the Enter key.

where

ltu_no
is the number of the line test unit which is to be replaced

Example of a MAP response:

```
LAST CIRCUIT = 27
POST CKT IDLED
SHORT CLLI IS:  LTU
OK, CLLI POSTED

POST       DELQ       BUSY Q          DIG
TTP 6-006
CKT TYPE   PM NO.     COM LANG        STA S R DOT TE R
OG         RMM 0 0     LTU  21        LO
                                      P_IDL
```

3

DANGER
Briefly state reasons for the warning
Enter the reasons for the warning: a warning informs the reader of a risk of service interruption, or damage to equipment, or both.

Busy the trunks that are associated with the card to be replaced by typing

>BSY

and pressing the Enter key.

NT2X11 in an OPM RMM (end)

At the RMM shelf

4 Replace the NT2X11 card using the common replacing a card procedure in this document. When you have completed the procedure, return to this point.

At the MAP display

5 Test the new NT2X11 card by typing

>TST

and pressing the Enter key.

If TST	Do
passed	step 6
failed	step 9

6 Return to service the circuits busied in step 3 by typing

>RTS

and pressing the Enter key.

If RTS	Do
passed	step 7
failed	step 9

7 Send any faulty cards for repair according to local procedure.

8 Record the following items in office records:

- date the card was replaced
- serial number of the card
- symptoms that prompted replacement of the card

Go to Step 10

9 Obtain further assistance in replacing this card by contacting the personnel responsible for higher level of support.

10 You have completed this procedure.

NT2X11 in an RLCM-EDC RMM

Application

Use this procedure to replace the card that follows in the shelves or frames identified in the table that follows.

PEC	Suffixes	Cardname	Shelf/frame name
NT2X11	AA, AE	Line Test Unit Digital Card (LTUD)	RMM/RLCC

You cannot always identify the PEC, suffix, and shelf or frame for the card you want to replace. If this event occurs refer to the Index for a list of cards, shelves, and frames documented in this maintenance manual.

Common procedures

The replacing a card procedure is referenced in this procedure.

Action

The following flowchart is only a summary of the procedure. To replace the card, use the instructions in the step-action procedure that follows the flowchart.

NT2X11
in an RLCM-EDC RMM (continued)

Summary of Replacing a NT2X11 card in RMM

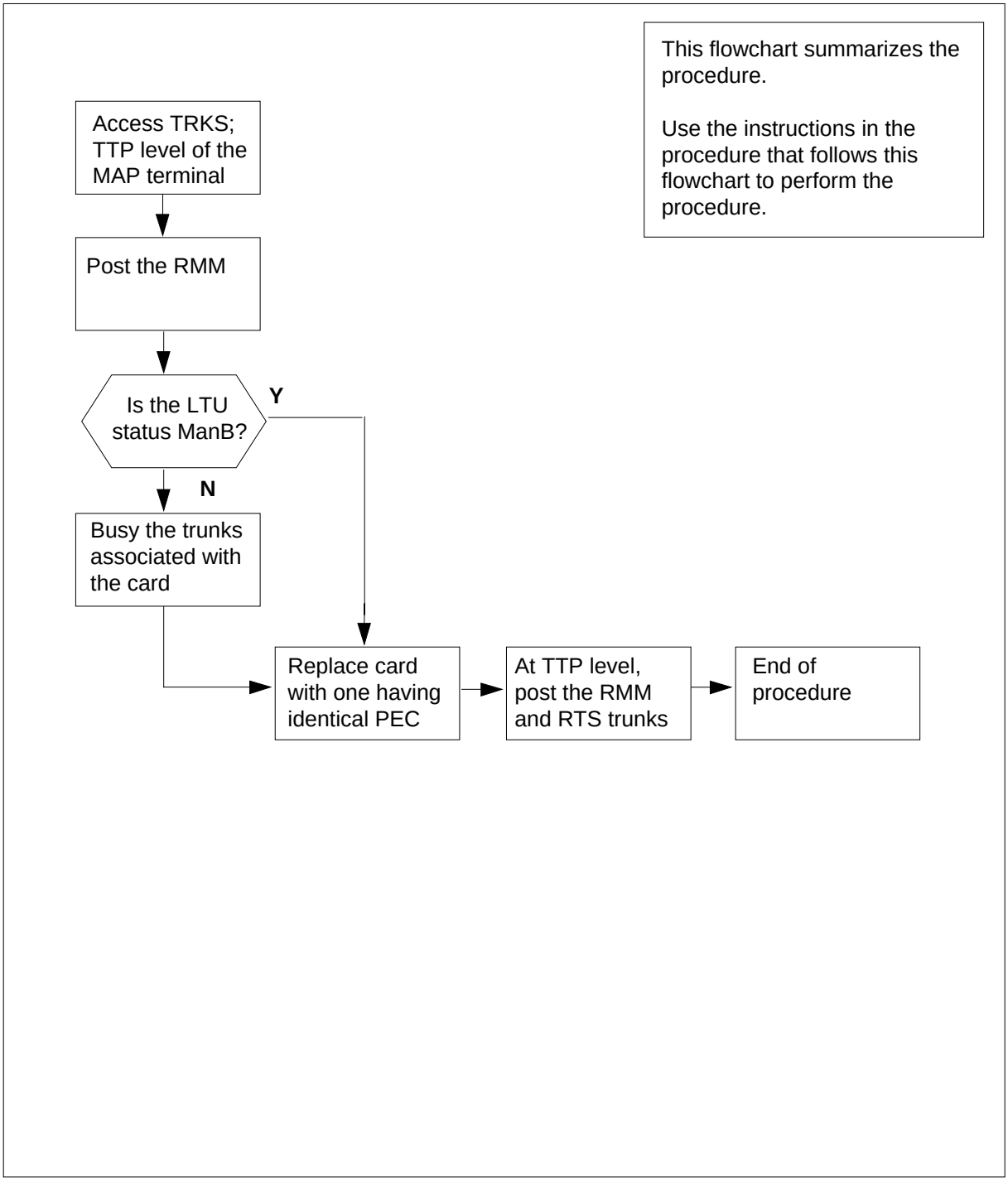

NT2X11 in an RLCM-EDC RMM (continued)

Replacing a NT2X11 card in RMM

At your current location

1 Obtain a replacement card. Make sure that the replacement card has the same product equipment code (PEC), including suffix, as the removed card.

At the MAP display

2 To access the TTP level of the MAP display and post the line test unit (LTU) associated with the damaged card, type

>MAPCI;MTC;TRKS;TTP;POST T LTU ltu_no

and press the Enter key.

where

ltu_no
is the number of the line test unit that has faults

Example of a MAP response:

```
LAST CIRCUIT = 27
POST CKT IDLED
SHORT CLLI IS:  LTU
OK, CLLI POSTED

POST       DELQ       BUSY Q          DIG
TTP 6-006
CKT TYPE   PM NO.     COM LANG        STA S R DOT TE R
OG         RMM 0 0     LTU  21        LO
                                      P_IDL
```

3 To busy the trunks associated with the damaged card, type

>BSY

and press the Enter key.

At the RMM shelf

4 Replace the NT2X11 card with the common replacing a card procedure in this document. When you have completed the procedure, return to this point.

NT2X11 in an RLCM-EDC RMM (end)

At the MAP display

5 To test the new NT2X11 card, type

>TST

and press the Enter key.

If TST	Do
passed	step 6
failed	step 9

6 To return to service the circuits busied in step 3, type

>RTS

and press the Enter key.

If RTS	Do
passed	step 7
failed	step 9

7 To send the faulty cards for repair follow the local procedures.

8 Record the items that follow in office records:

- date the replaced card
- serial number of the card
- indications that prompted replacement of the card

Go to Step 10

9 To replace this card you can obtain additional help. For additional help contact the personnel responsible for next level of support.

10 You have completed this procedure.

NT2X11 in an RLCM RMM

Application

Use this procedure to replace the following card in an RMM.

PEC	Suffixes	Name
NT2X11	AA, AB, AC, AD, BA	Line Test Unit Digital Card (LTUD)

Common procedures

The replacing a card procedure is referenced in this procedure.

Action

The following flowchart is a summary of the procedure. To replace the card, use the instructions in the procedure that follows the flowchart.

NT2X11
in an RLCM RMM (continued)

Summary of card replacement procedure for an NT2X11 card in an RMM

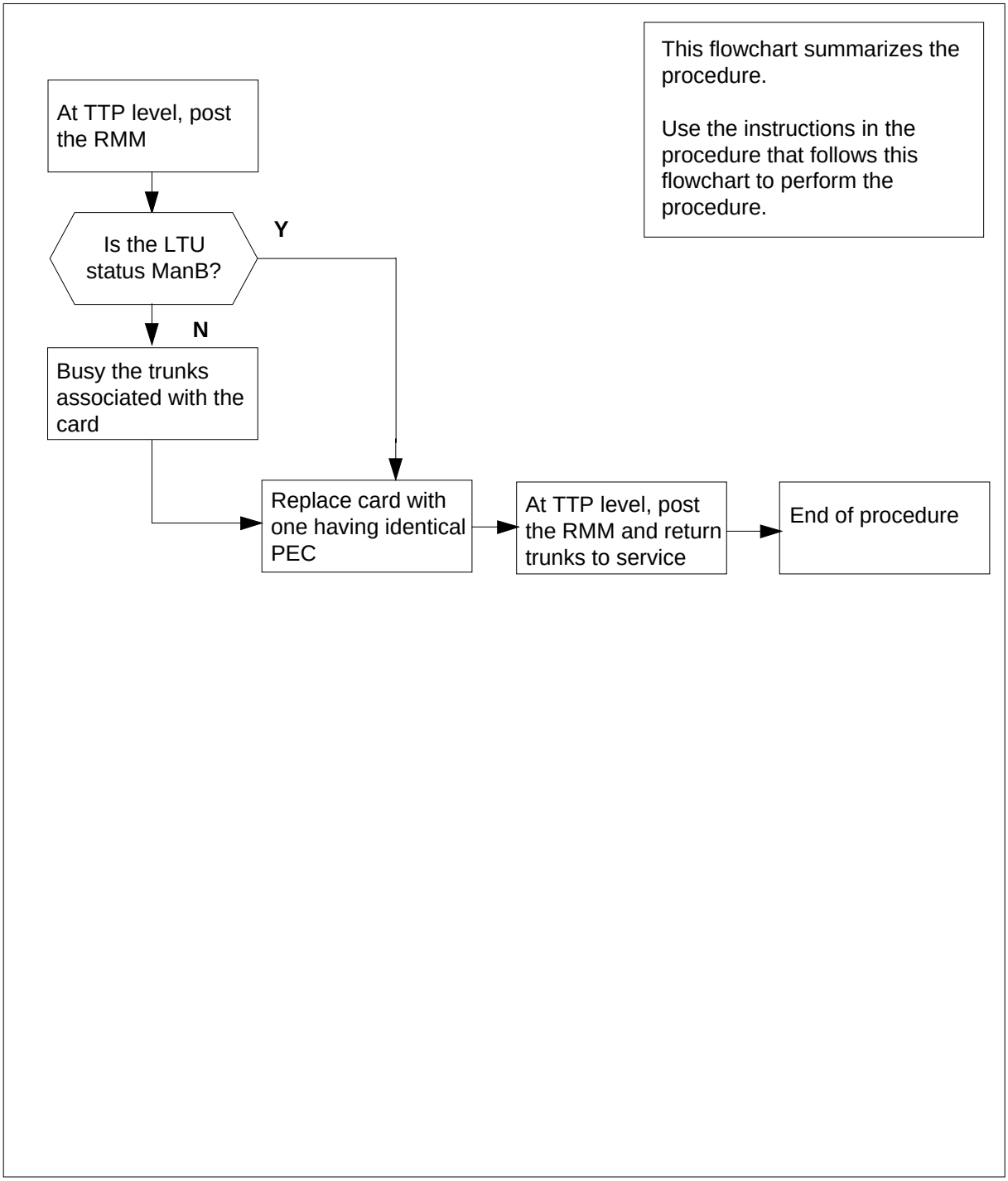

NT2X11 in an RLCM RMM (continued)

Replacing an NT2X11 card in an RMM

At your current location

1 Obtain a replacement card. Ensure that the replacement card has the same product equipment code (PEC), including suffix, as the card to be removed.

At the MAP display

2 Access the TTP level of the MAP and post the line test unit to be replaced by typing

`>MAPCI;MTC;TRKS;TTP;POST T LTU ltu_no`

and pressing the Enter key.

where

ltu_no
is the number of the line test unit which is to be replaced

Example of a MAP response:

```
LAST CIRCUIT = 27
POST CKT IDLED
SHORT CLLI IS:  LTU
OK, CLLI POSTED

POST       DELQ       BUSY Q          DIG
TTP 6-006
CKT TYPE   PM NO.     COM LANG        STA S R DOT TE R
OG         RMM 0 0     LTU  21        LO
                                      P_IDL
```

3

DANGER
Briefly state reasons for the warning
Enter the reasons for the warning: a warning informs the reader of a risk of service interruption, or damage to equipment, or both.

Busy the trunks that are associated with the card to be replaced by typing

`>BSY`

and pressing the Enter key.

NT2X11 in an RLCM RMM (end)

At the RMM shelf

4 Replace the NT2X11 card using the common replacing a card procedure in this document. When you have completed the procedure, return to this point.

At the MAP display

5 Test the new NT2X11 card by typing

>TST

and pressing the Enter key.

If TST	Do
passed	step 6
failed	step 9

6 Return to service the circuits busied in step 3 by typing

>RTS

and pressing the Enter key.

If RTS	Do
passed	step 7
failed	step 9

7 Send any faulty cards for repair according to local procedure.

8 Record the following items in office records:

- date the card was replaced
- serial number of the card
- symptoms that prompted replacement of the card

Go to step 10

9 Obtain further assistance in replacing this card by contacting the personnel responsible for higher level of support.

10 You have completed this procedure.

NT2X11 in an RSC RMM

Application

Use this procedure to replace the following card in an RSC RMM.

PEC	Suffixes	Name
NT2X11	BA	Line test unit (LTU) control card
NT2X11	BA	Multi-line test unit (MTU) control card

Common Procedures

None

Action

The following flowchart is a summary of the procedure. To replace the card, use the instructions in the procedure that follows the flowchart.

NT2X11 in an RSC RMM (continued)

Summary of card replacement procedure for an NT2X11 card in RSC RMM

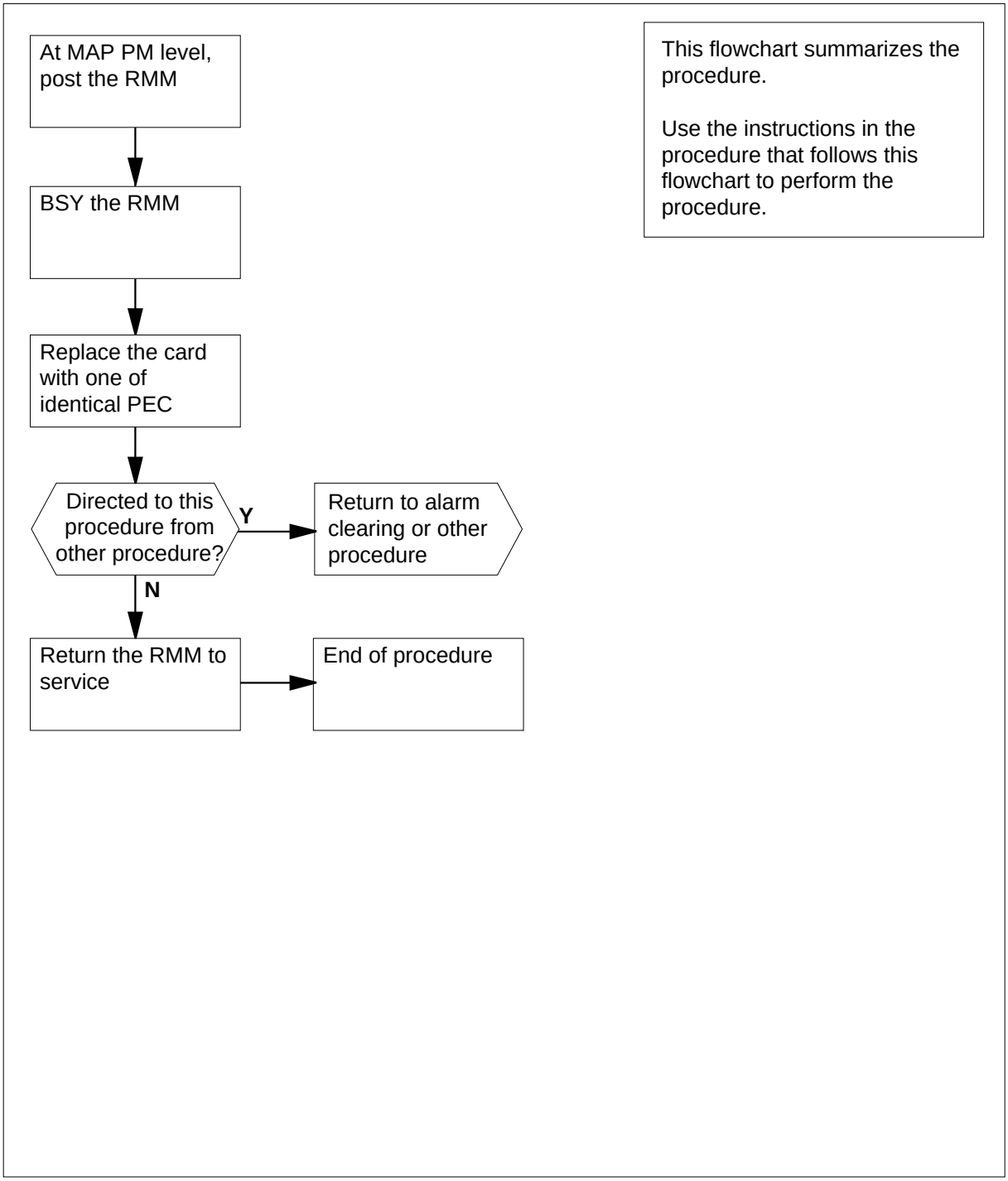

NT2X11
in an RSC RMM (continued)

Replacing an NT2X11 card in an RSC RMM

At your current location:

1 Proceed only if you were either directed to this card replacement procedure from a step in a maintenance procedure, are using the procedure to verify or accept cards, or were directed to this procedure by your maintenance support group.

2 Obtain a replacement card. Ensure the replacement card has the same product equipment code (PEC) including suffix, as the card to be removed.

At the MAP display

3 Access the PM level and post the RMM by typing

>MAPCI;MTC;PM;POST RMM rmm_no

and pressing the Enter key.

where

rmm_no
is the number of the RMM where the card is to be removed

Example of a MAP display:

```
   CM    MS    IOD    Net    PM    CCS    LNS    Trks    Ext    APPL
   .     .      .      .    4SysB   .      .       .      .      .

RMM               SysB     ManB     OffL     CBsy     ISTb      InSv
 0 Quit    PM        4        0       10        3        3       130
 2 Post_   RMM       0        1        1        0        0         2
 3
 4         RMM  5  INSV
 5 Trnsl
 6 Tst
 7 Bsy
 8 RTS
 9 OffL
10 LoadPM
11 Disp_
12 Next
13
14 QueryPM
15
16
17
18
```

4 Busy the RMM by typing

>BSY

and pressing the Enter key.

NT2X11 in an RSC RMM (continued)

Example of a MAP display:

```
   CM     MS     IOD     Net     PM     CCS     LNS     Trks     Ext     APPL
   .      .       .       .    4SysB    .       .        .       .       .

RMM                SysB      ManB      OffL      CBsy      ISTb       InSv
 0 Quit    PM         4         0        10         3         3        130
 2 Post_   RMM        0         1         1         0         0          2
 3
 4         RMM  5  ManB
 5 Trnsl
 6 Tst
 7 Bsy
 8 RTS
 9 OffL
10 LoadPM
11 Disp_
12 Next
13
14 QueryPM
15
16
17
18
```

At the RMM shelf

5

CAUTION
Static discharge may cause damage to circuit packs
Put on a wrist strap and connect it to the frame of the RMM before removing or inserting any cards. This protects the RMM against service degradation caused by static electricity.

Put on a wrist strap.

6

DANGER
Equipment damage
Take these precautions when removing or inserting a card:

1. Do not apply direct pressure to the components.
2. Do not force the cards into the slots.

Remove the NT2X11 card as shown in the following figures.

NT2X11
in an RSC RMM (continued)

a Locate the card to be removed on the appropriate shelf.

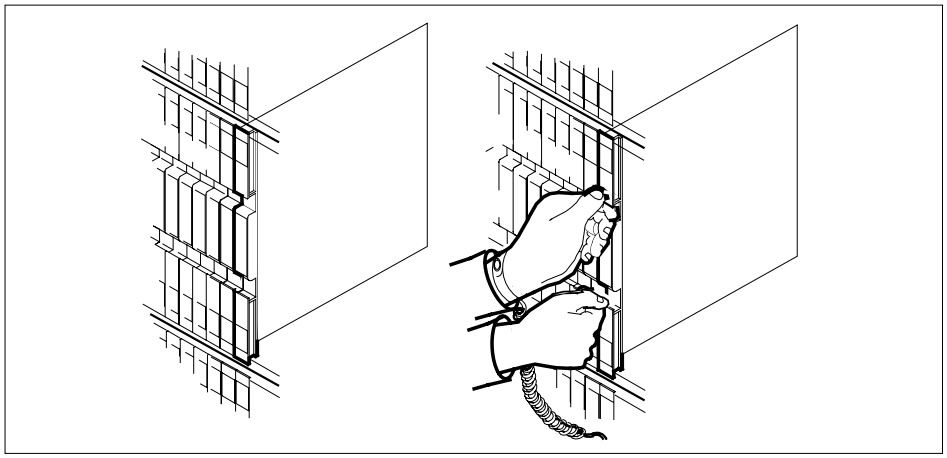

b Open the locking levers on the card to be replaced and gently pull the card towards you until it clears the shelf.

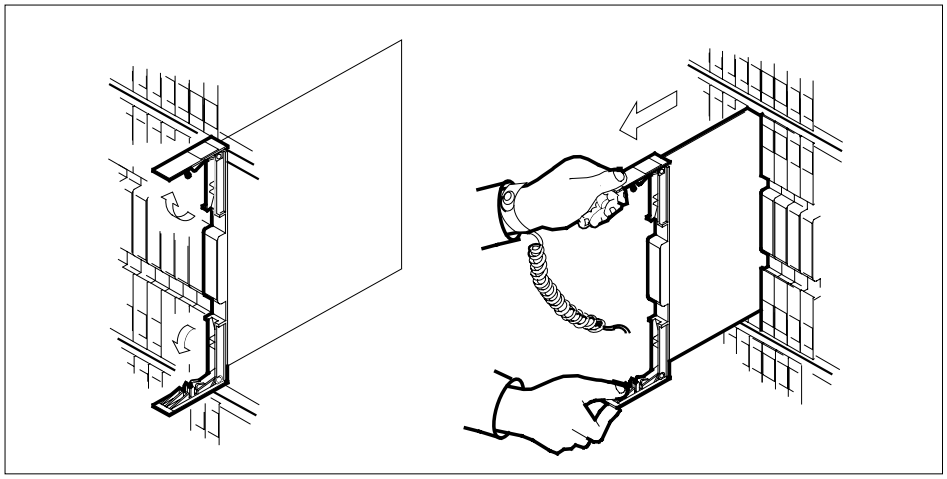

c Ensure the replacement card has the same PEC including suffix, as the card you just removed.

7 Open the locking levers on the replacement card.

Align the card with the slots in the shelf and gently slide the card into the shelf.

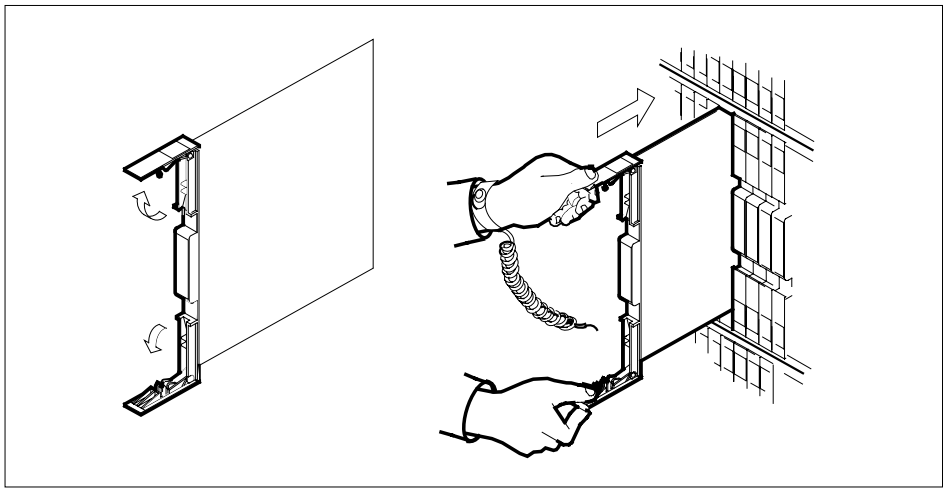

8 Seat and lock the card.

a Using your fingers or thumbs, push on the upper and lower edges of the faceplate to ensure the card is fully seated in the shelf.

b Close the locking levers.

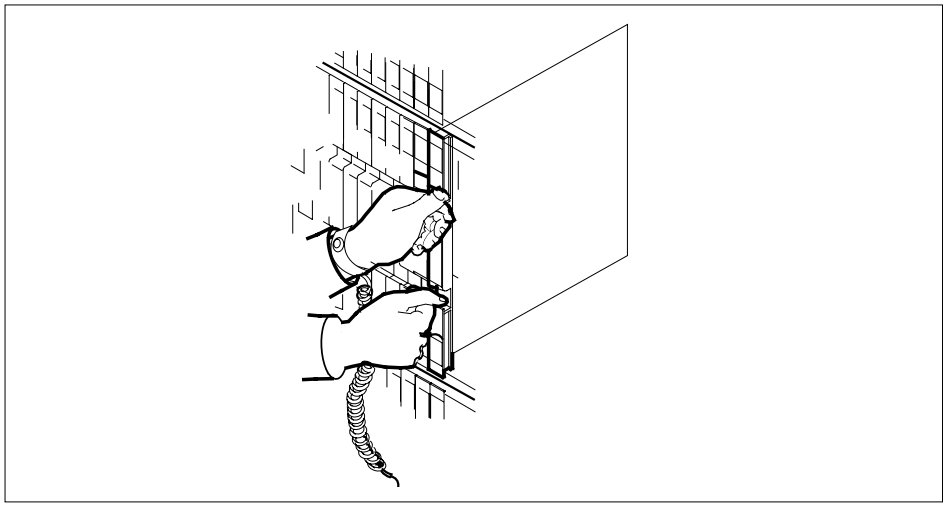

9 Use the following information to determine the next step in this procedure.

If you entered this procedure from	Do
an alarm clearing procedure	step 15
other	step 10

NT2X11 in an RSC RMM (end)

At the MAP display

10 Test the RMM by typing

>TST

and pressing the Enter key.

Example of a MAP response:

```
Test Passed
```

or

```
Test Failed
```

If the TST	Do
passed	step 11
failed	step 15

11 Return the RMM to service by typing

>RTS

and pressing the Enter key.

If the RTS	Do
passed	step 12
failed	step 16

12 Send any faulty cards for repair according to local procedure.

13 Record the following items in office records:

- date the card was replaced
- serial number of the card
- symptoms that prompted replacement of the card

14 Go to step 17.

15 Return to the *Alarm Clearing Procedure* that directed you to this card replacement procedure. If necessary, go to the point where the faulty card list was produced, identify the next faulty card on the list, and go to the appropriate replacement procedure in this manual for that card.

16 Obtain further assistance in replacing this card by contacting personnel responsible for higher level of support.

17 You have successfully completed this procedure. Return to the maintenance procedure that directed you to this card replacement procedure and continue as directed.

NT2X11 in an RSC-S (DS-1) Model A RMM

Application

Use this procedure to replace an NT2X11 card in an RSC-S RMM.

PEC	Suffixes	Name
NT2X11	BA	Line Test Unit (digital)

Common procedures

None

Action

The following flowchart is only a summary of the procedure. To replace the card, use the instructions in the procedure that follows the flowchart.

NT2X11
in an RSC-S (DS-1) Model A RMM (continued)

Summary of card replacement procedure for an NT2X11 card in RSC-S RMM

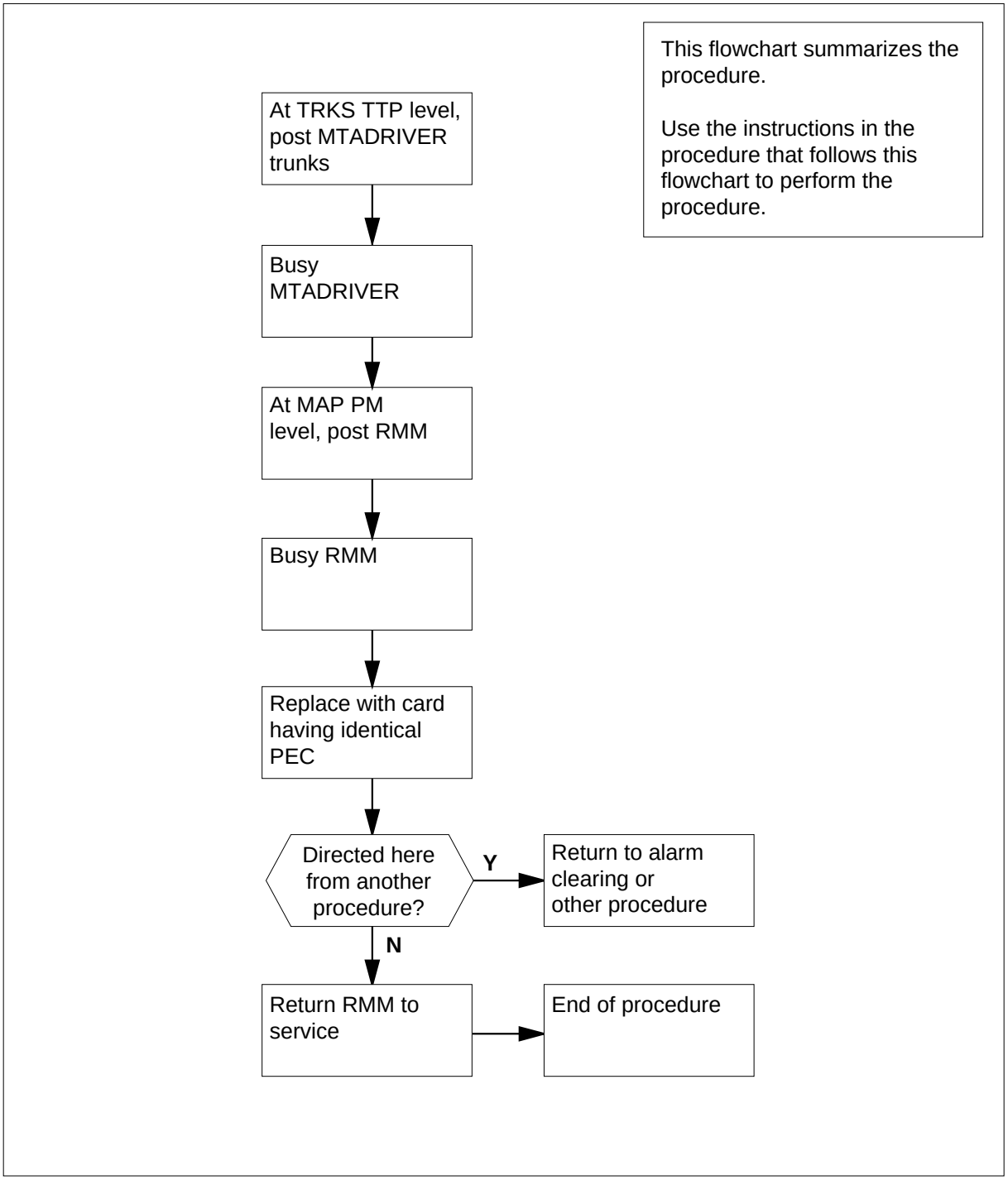

Replacing an NT2X11 card in RSC-S RMM

At your Current Location

1 Proceed only if you have been directed to this card replacement procedure from a step in a maintenance procedure, are using the procedure for verifying or accepting cards, or have been directed to this procedure by your maintenance support group.

2 Obtain an NT2X11 replacement card. Ensure the replacement card has the same product equipment code (PEC), including suffix, as the card that is to be removed.

At the MAP terminal

3 Set the MAP display to TTP level and post the RMM by typing

>MAPCI;MTC;TRKS;TTP;POST G MTADRIVER

and pressing the Enter key.

Example of a MAP display:

```
 CM     MS     IOD     Net     PM    CCS    LNS    Trks    Ext   Appl
  .      .       .       .      .      .      .       .      .      .

TTP
 0 Quit       POST    1            DELQ         BUSYQ          DIG
 2 Post_      TTP    6-009
 3 Seize_     CKT TYPE    PM NO.  COM LANG    STA  S  R  DOT TE RESULT
 4            MISC   RMM  0  16   MATDRIVER  0 IDL
 5 Bsy_
 6 RTS_
 7 Tst_
 8
 9 CktInfo
10 CktLoc
11 Hold       TTP ID IS:   6-009
12 Next_      NO CKT, SET IS EMPTY
13 Rls_       TTP:
14 Ckt_       LAST CKTN  =  1
15 Trnslvf_   SHORT CLLI IS:  MTADRI
16 Stksdr_    OK, CKT POSTED
17 Pads_
18 Level_
```

4 Busy the MTADRIVER by typing

>BSY;BSY;INB;ALL

and pressing the Enter key.

Example of a MAP display:

NT2X11
in an RSC-S (DS-1) Model A RMM (continued)

```
  CM    MS    IOD    Net     PM    CCS    LNS    Trks    Ext    Appl
  .     .      .      .      .     .      .       .      .      .

TTP
 0 Quit       POST    1            DELQ         BUSYQ          DIG
 2 Post_      TTP    6-009
 3 Seize_     CKT TYPE    PM NO. COM LANG     STA  S  R  DOT TE RESULT
 4            MISC   RMM  0  16  MATDRIVER  0 IDL
 5 Bsy_
 6 RTS_
 7 Tst_
 8
 9 CktInfo
10 CktLoc
11 Hold       TTP ID IS:   6-009
12 Next_      NO CKT, SET IS EMPTY
13 Rls_       TTP:
14 Ckt_       LAST CKTN  =  1
15 Trnslvf_   SHORT CLLI IS:  MTADRI
16 Stksdr_    OK, CKT POSTED
17 Pads_
18 Level_
```

5 Set the MAP display to the PM level and post the RMM by typing

>MAPCI;MTC;PM;POST RMM rmm_no

and pressing the Enter key.

where

rmm_no
is the number of the RMM where the card is to be removed

Example of a MAP display:

NT2X11
in an RSC-S (DS-1) Model A RMM (continued)

```
 CM    MS    IOD    Net     PM    CCS    LNS    Trks    Ext    Appl
  .     .     .      .      .     .      .      .       .      .

RMM              SysB     ManB     OffL     CBsy     ISTb      InSv
 0 Quit    PM       0        0        0        0        0       130
 2 Post_   RMM      0        0        0        0        0         0
 3
 4         RMM  5  INSV
 5 Trnsl
 6 Tst
 7 Bsy
 8 RTS
 9 OffL
10 LoadPM
11 Disp_
12 Next
13
14 QueryPM
15
16
17
18
```

6 Busy the RMM by typing

>BSY

and pressing the Enter key.

Example of a MAP display:

```
 CM    MS    IOD    Net     PM    CCS    LNS    Trks    Ext    Appl
  .     .     .      .    1ManB   .      .      .       .      .

RMM              SysB     ManB     OffL     CBsy     ISTb      InSv
 0 Quit    PM       4        0       10        0        0       130
 2 Post_   RMM      0        1        0        0        0         0
 3
 4         RMM  5  ManB
 5 Trnsl
 6 Tst
 7 Bsy
 8 RTS
 9 OffL
10 LoadPM
11 Disp_
12 Next
13
14 QueryPM
15
16
17
18
```

NT2X11 in an RSC-S (DS-1) Model A RMM (continued)

At the RMM shelf

7

CAUTION
Static discharge may cause damage to circuit packs
Put on a wrist strap and connect it to the frame of the RMM before removing any cards. This protects the RMM against service degradation caused by static electricity.

Put on a wrist strap.

8 Remove the NT2X11 card as shown in the following figures.

a Locate the card to be removed on the appropriate shelf.

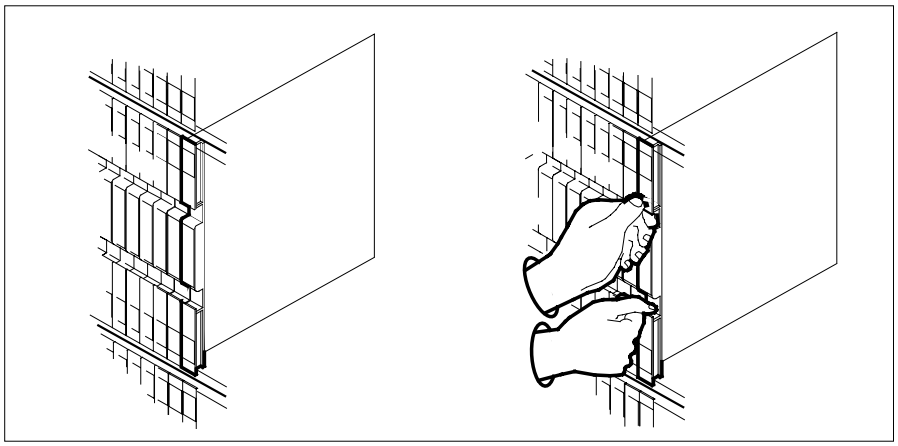

b Open the locking levers on the card to be replaced and gently pull the card toward you until it clears the shelf.

NT2X11
in an RSC-S (DS-1) Model A RMM (continued)

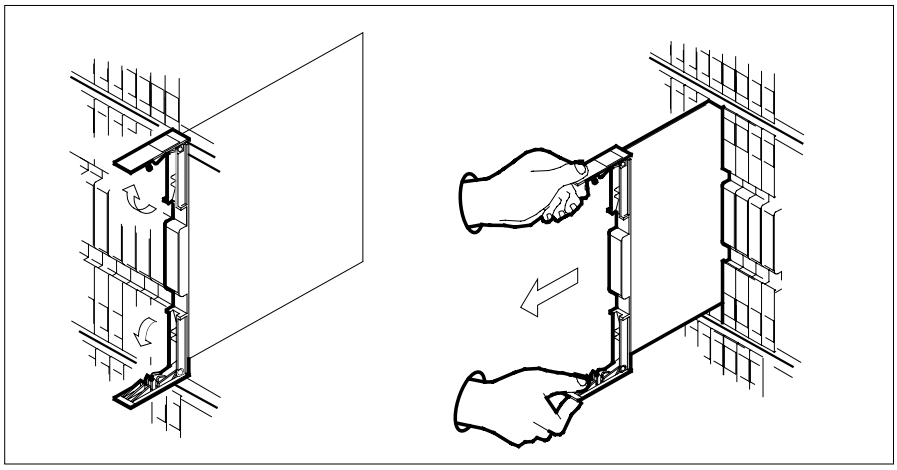

c Ensure the replacement card has the same PEC, including suffix, as the card you just removed.

9 Open the locking levers on the replacement card.

a Align the card with the slots in the shelf.

b Gently slide the card into the shelf.

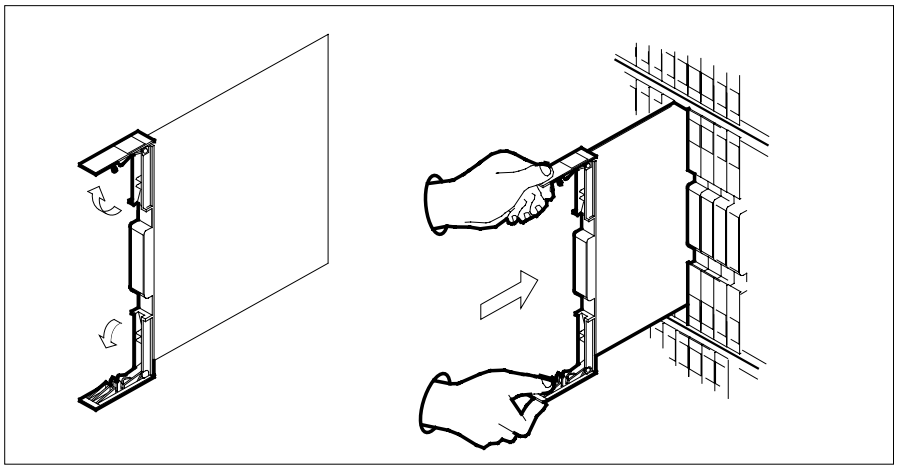

NT2X11 in an RSC-S (DS-1) Model A RMM (continued)

10

DANGER
Equipment damage
Take these precautions when removing or inserting a card:

1. Do not apply direct pressure to the components.
2. Do not force the card into the slot.

Seat and lock the card.

a Using your fingers or thumbs, push on the upper and lower edges of the faceplate to ensure the card is fully seated in the shelf.

b Close the locking levers.

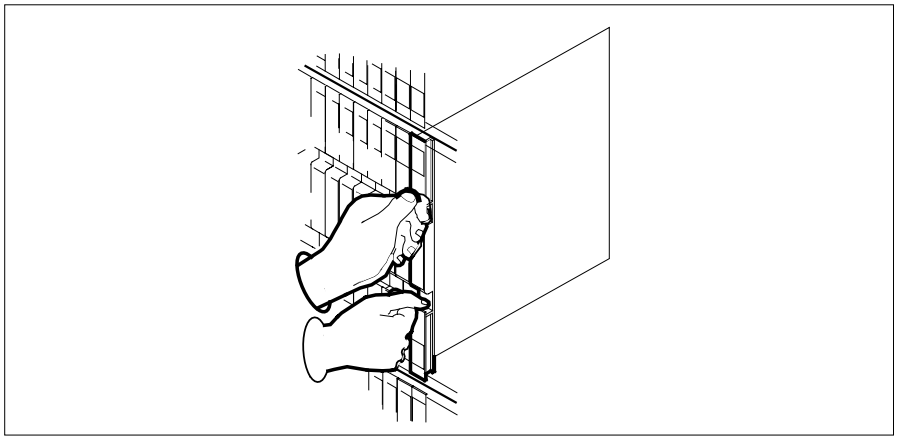

11 Use the following information to determine where to proceed.

If you entered this procedure from	Do
alarm clearing procedures	step 18
other	step 12

NT2X11 in an RSC-S (DS-1) Model A RMM (end)

At the MAP terminal

12 Test the RMM by typing

>TST

and pressing the Enter key.

If TST	Do
passed	step 13
failed	step 18

13 Return the RMM to service by typing

>RTS

and pressing the Enter key.

If RTS	Do
passed	step 14
failed	step 19

14 Post the MTADRIVER by typing

>TRKS;TTP;POST G MTADRIVER

and pressing the Enter key.

15 Return the MTADRIVER to service by typing

>BSY ALL;RTS ALL

and pressing the Enter key.

16 Send any faulty cards for repair according to local procedure.

17 Record the date the card was replaced, the serial number of the card, and the symptoms that prompted replacement of the card. Go to step 20.

18 Return to the procedure that directed you to this procedure. At the point where a faulty card list was produced, identify the next faulty card on the list, and go to the appropriate card replacement procedure for that card in this manual.

19 Obtain further assistance in replacing this card by contacting operating company maintenance personnel.

20 You have successfully completed this procedure. Return to the maintenance procedure that directed you to this card replacement procedure and continue as directed.

NT2X11 in an RSC-S (DS-1) Model B RMM

Application

Use this procedure to replace an NT2X11 card in an RSC-S RMM.

PEC	Suffixes	Name
NT2X11	BA	Line Test Unit (digital)

Common procedures

None

Action

The following flowchart is only a summary of the procedure. To replace the card, use the instructions in the procedure that follows the flowchart.

NT2X11
in an RSC-S (DS-1) Model B RMM (continued)

Summary of card replacement procedure for an NT2X11 card in RSC-S RMM

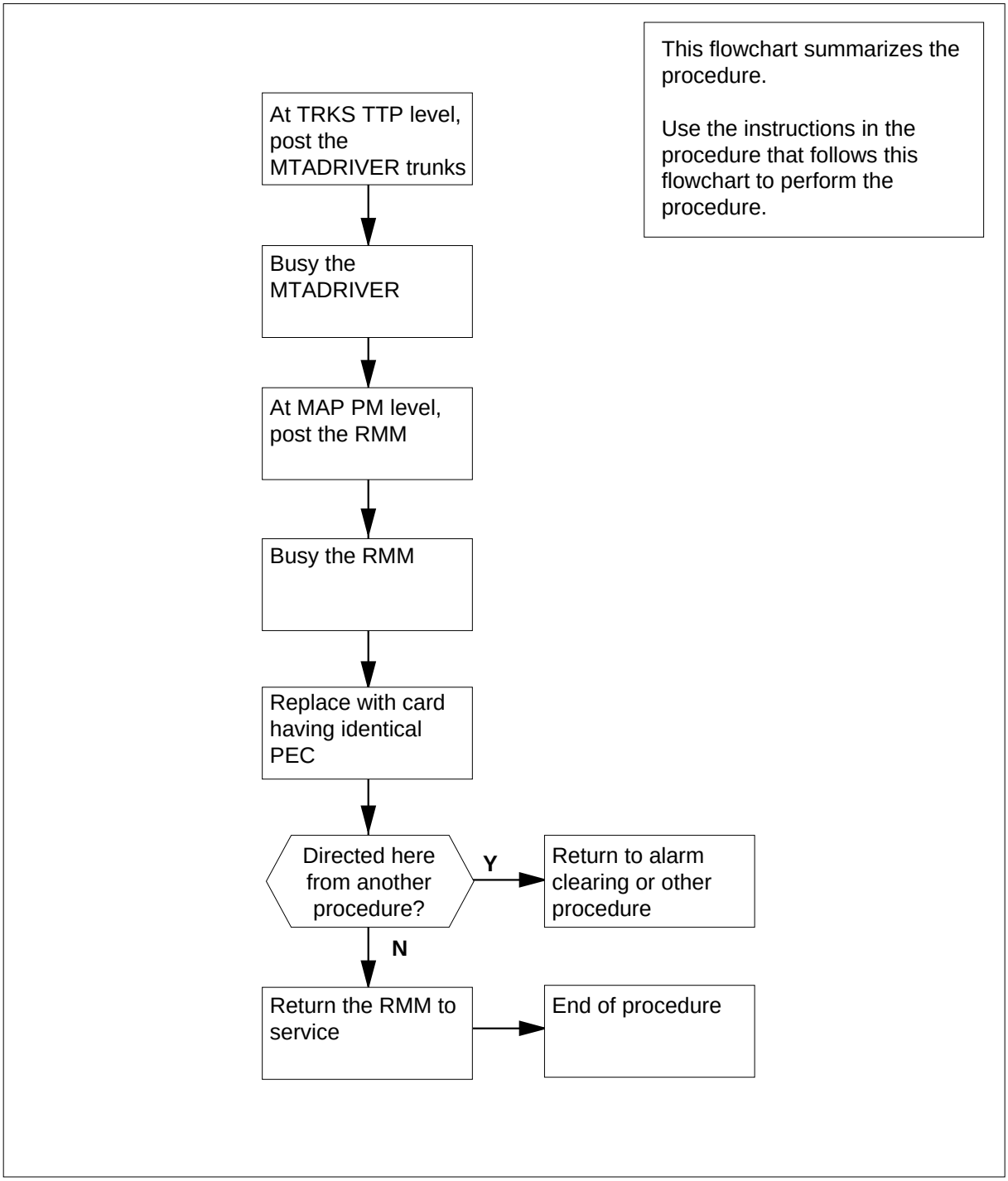

NT2X11 in an RSC-S (DS-1) Model B RMM (continued)

Replacing an NT2X11 card in RSC-S RMM

At your Current Location

1 Proceed only if you have been directed to this card replacement procedure from a step in a maintenance procedure, are using the procedure for verifying or accepting cards, or have been directed to this procedure by your maintenance support group.

2 Obtain an NT2X11 replacement card. Ensure the replacement card has the same product equipment code (PEC), including suffix, as the card that is to be removed.

At the MAP terminal

3 Set the MAP display to TTP level and post the RMM by typing

>MAPCI;MTC;TRKS;TTP;POST G MTADRIVER

and pressing the Enter key.

Example of a MAP display:

```
  CM    MS    IOD    Net     PM    CCS    LNS    Trks    Ext   Appl
   .     .     .      .       .      .      .      .      .     .

TTP
 0 Quit       POST    1            DELQ         BUSYQ          DIG
 2 Post_      TTP    6-009
 3 Seize_     CKT TYPE    PM NO.  COM LANG     STA  S  R  DOT TE RESULT
 4            MISC   RMM  0  16   MATDRIVER  0 IDL
 5 Bsy_
 6 RTS_
 7 Tst_
 8
 9 CktInfo
10 CktLoc
11 Hold       TTP ID IS:   6-009
12 Next_      NO CKT, SET IS EMPTY
13 Rls_       TTP:
14 Ckt_       LAST CKTN  =  1
15 Trnslvf_   SHORT CLLI IS:  MTADRI
16 Stksdr_    OK, CKT POSTED
17 Pads_
18 Level_
```

4 Busy the MTADRIVER by typing

>BSY;BSY;INB;ALL

and pressing the Enter key.

Example of a MAP display:

```
  CM    MS    IOD    Net     PM    CCS    LNS    Trks   Ext    Appl
   .     .      .      .      .      .      .      .      .      .

TTP
 0 Quit       POST    1            DELQ         BUSYQ          DIG
 2 Post_      TTP    6-009
 3 Seize_     CKT TYPE    PM NO. COM LANG     STA  S  R  DOT TE RESULT
 4            MISC   RMM  0  16  MATDRIVER  0 IDL
 5 Bsy_
 6 RTS_
 7 Tst_
 8
 9 CktInfo
10 CktLoc
11 Hold       TTP ID IS:   6-009
12 Next_      NO CKT, SET IS EMPTY
13 Rls_       TTP:
14 Ckt_       LAST CKTN  =  1
15 Trnslvf_   SHORT CLLI IS:  MTADRI
16 Stksdr_    OK, CKT POSTED
17 Pads_
18 Level_
```

5 Set the MAP display to the PM level and post the RMM by typing

>MAPCI;MTC;PM;POST RMM rmm_no

and pressing the Enter key.

where

rmm_no
is the number of the RMM where the card is to be removed

Example of a MAP display:

NT2X11
in an RSC-S (DS-1) Model B RMM (continued)

```
 CM     MS     IOD     Net     PM    CCS    LNS    Trks    Ext   Appl
  .      .      .       .       .     .      .      .       .     .

RMM              SysB     ManB     OffL     CBsy     ISTb      InSv
 0 Quit    PM       0        0        0        0        0       130
 2 Post_   RMM      0        0        0        0        0         0
 3
 4         RMM  5  INSV
 5 Trnsl
 6 Tst
 7 Bsy
 8 RTS
 9 OffL
10 LoadPM
11 Disp_
12 Next
13
14 QueryPM
15
16
17
18
```

6 Busy the RMM by typing

>BSY

and pressing the Enter key.

Example of a MAP display:

```
 CM     MS     IOD     Net     PM    CCS    LNS    Trks   Ext   Appl
 .      .      .       .     1ManB   .      .      .      .     .

RMM              SysB     ManB     OffL     CBsy     ISTb      InSv
 0 Quit    PM       4        0       10        0        0       130
 2 Post_   RMM      0        1        0        0        0         0
 3
 4         RMM  5  ManB
 5 Trnsl
 6 Tst
 7 Bsy
 8 RTS
 9 OffL
10 LoadPM
11 Disp_
12 Next
13
14 QueryPM
15
16
17
18
```

NT2X11
in an RSC-S (DS-1) Model B RMM (continued)

At the RMM shelf

7

CAUTION
Static discharge may cause damage to circuit packs
Put on a wrist strap and connect it to the frame of the RMM before removing any cards. This protects the RMM against service degradation caused by static electricity.

Put on a wrist strap.

8 Remove the NT2X11 card as shown in the following figures.

a Locate the card to be removed on the appropriate shelf.

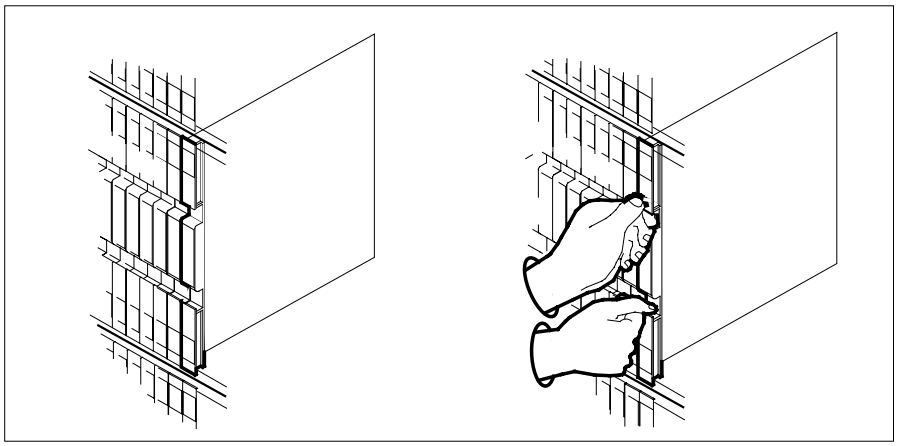

b Open the locking levers on the card to be replaced and gently pull the card toward you until it clears the shelf.

NT2X11
in an RSC-S (DS-1) Model B RMM (continued)

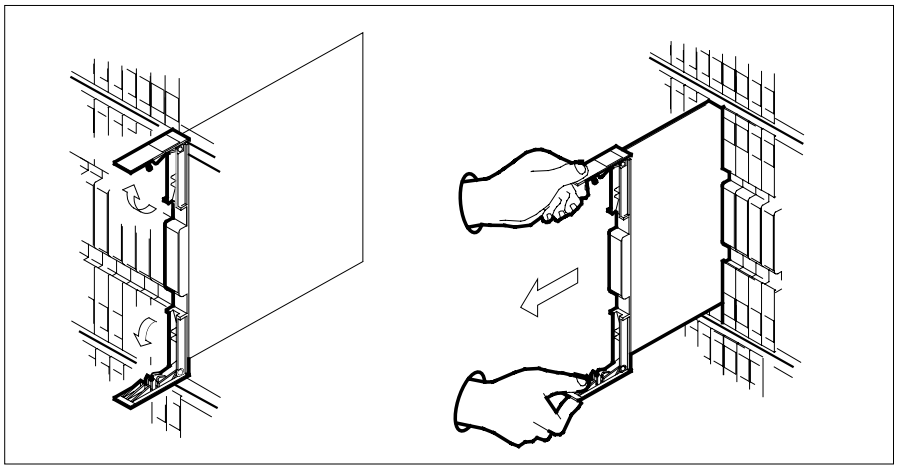

c Ensure the replacement card has the same PEC, including suffix, as the card you just removed.

9 Open the locking levers on the replacement card.

a Align the card with the slots in the shelf.

b Gently slide the card into the shelf.

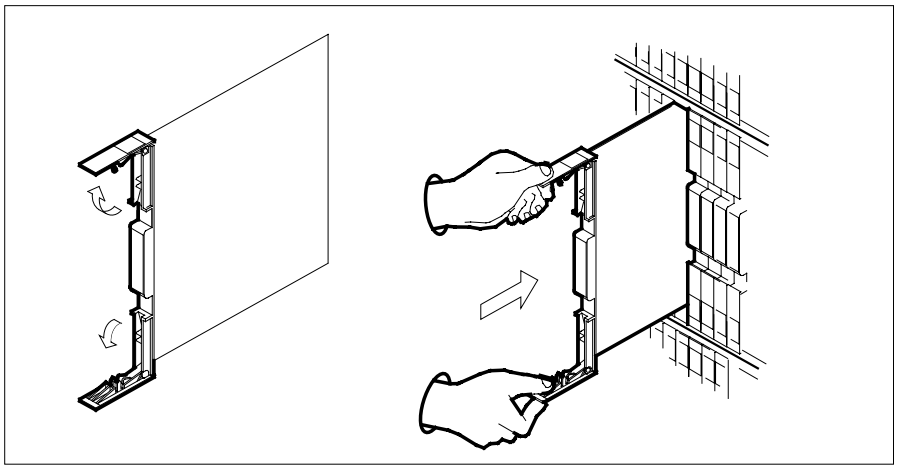

NT2X11
in an RSC-S (DS-1) Model B RMM (continued)

10

DANGER
Equipment damage
Take these precautions when removing or inserting a card:

1. Do not apply direct pressure to the components.
2. Do not force the card into the slot.

Seat and lock the card.

a Using your fingers or thumbs, push on the upper and lower edges of the faceplate to ensure the card is fully seated in the shelf.

b Close the locking levers.

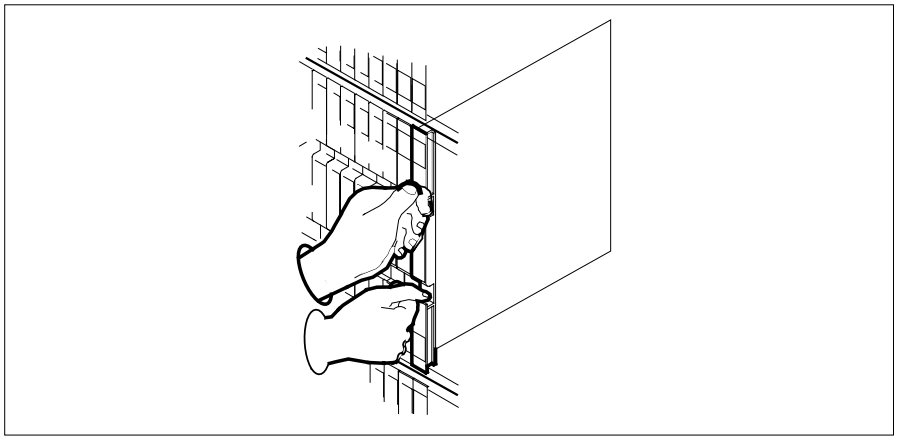

11 Use the following information to determine where to proceed.

If you entered this procedure from	Do
alarm clearing procedures	step 18
other	step 12

NT2X11 in an RSC-S (DS-1) Model B RMM (end)

At the MAP terminal

12 Test the RMM by typing

>TST

and pressing the Enter key.

If TST	Do
passed	step 13
failed	step 18

13 Return the RMM to service by typing

>RTS

and pressing the Enter key.

If RTS	Do
passed	step 14
failed	step 19

14 Post the MTADRIVER by typing

>TRKS;TTP;POST G MTADRIVER

and pressing the Enter key.

15 Return the MTADRIVER to service by typing

>BSY ALL;RTS ALL

and pressing the Enter key.

16 Send any faulty cards for repair according to local procedure.

17 Record the date the card was replaced, the serial number of the card, and the symptoms that prompted replacement of the card. Go to step 20.

18 Return to the procedure that directed you to this procedure. At the point where a faulty card list was produced, identify the next faulty card on the list, and go to the appropriate card replacement procedure for that card in this manual.

19 Obtain further assistance in replacing this card by contacting operating company maintenance personnel.

20 You have successfully completed this procedure. Return to the maintenance procedure that directed you to this card replacement procedure and continue as directed.

NT2X11 in an RSC-S (PCM-30) Model A RMM

Application

Use this procedure to replace an NT2X11 card in an RSC-S RMM.

PEC	Suffixes	Name
NT2X11	BA	Line Test Unit (digital)

Common procedures

None

Action

The following flowchart is only a summary of the procedure. To replace the card, use the instructions in the procedure that follows the flowchart.

NT2X11
in an RSC-S (PCM-30) Model A RMM (continued)

Summary of card replacement procedure for an NT2X11 card in RSC-S RMM

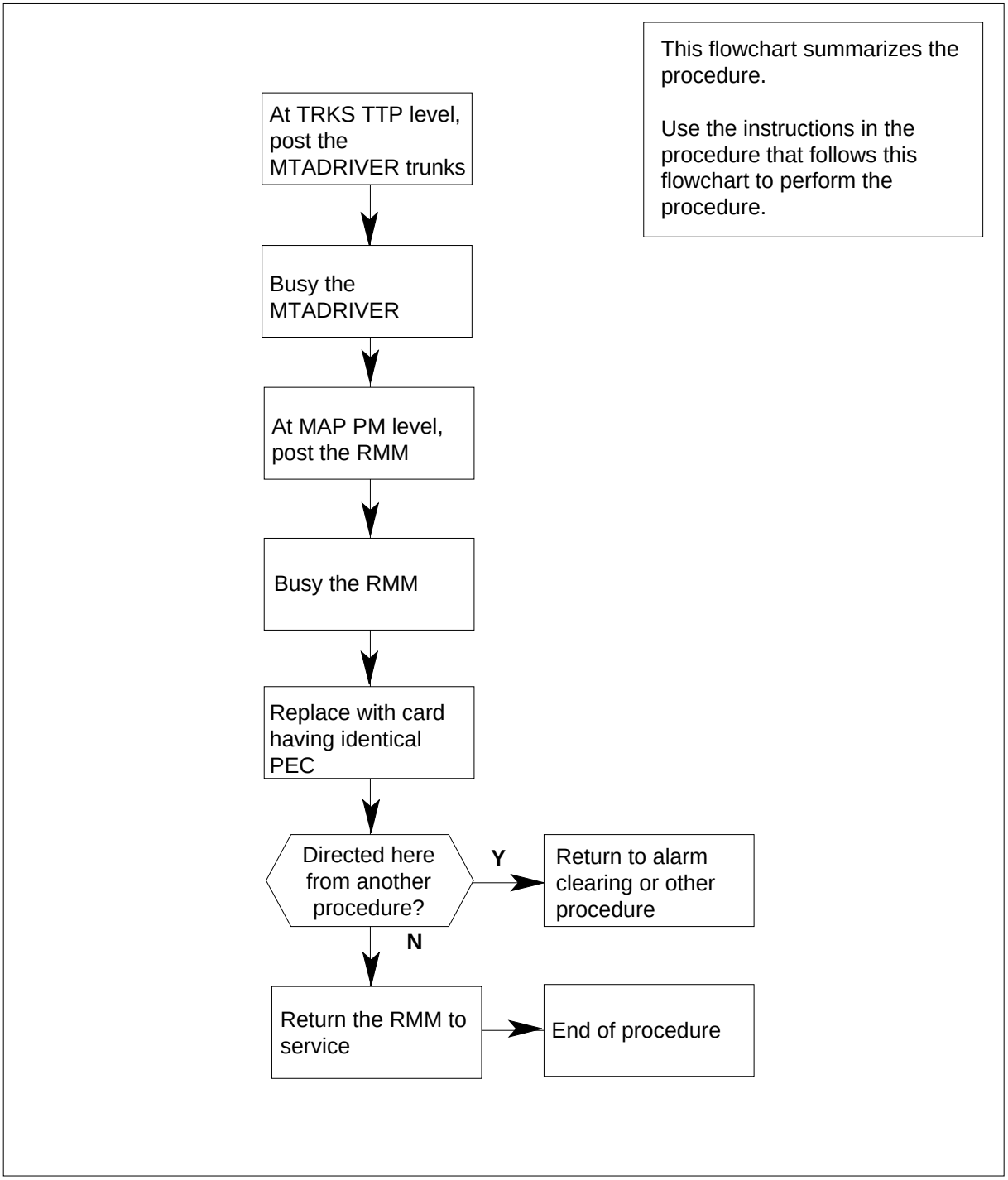

NT2X11
in an RSC-S (PCM-30) Model A RMM (continued)

Replacing an NT2X11 card in RSC-S RMM

At your Current Location

1 Proceed only if you have been directed to this card replacement procedure from a step in a maintenance procedure, are using the procedure for verifying or accepting cards, or have been directed to this procedure by your maintenance support group.

2 Obtain an NT2X11 replacement card. Ensure the replacement card has the same product equipment code (PEC), including suffix, as the card that is to be removed.

At the MAP terminal

3 Set the MAP display to TTP level and post the RMM by typing

`>MAPCI;MTC;TRKS;TTP;POST P RMM rmm_no ckt_no`

and pressing the Enter key.

where

rmm_no
is the number of the RMM with the faulty MTADRIVER card

ckt_no
is the number of the faulty MTADRIVER card

Example of a MAP display:

```
 CM     MS     IOD     Net     PM    CCS    LNS    Trks    Ext   Appl
  .      .       .       .       .      .      .       .      .      .
TTP
 0 Quit       POST    1            DELQ         BUSYQ          DIG
 2 Post_      TTP    6-009
 3 Seize_     CKT TYPE    PM NO.  COM LANG     STA  S  R  DOT TE RESULT
 4            MISC   RMM  0  16   MATDRIVER  0 IDL
 5 Bsy_
 6 RTS_
 7 Tst_
 8
 9 CktInfo
10 CktLoc
11 Hold       TTP ID IS:   6-009
12 Next_      NO CKT, SET IS EMPTY
13 Rls_       TTP:
14 Ckt_       LAST CKTN  =  1
15 Trnslvf_   SHORT CLLI IS:  MTADRI
16 Stksdr_    OK, CKT POSTED
17 Pads_
18 Level_
```

NT2X11
in an RSC-S (PCM-30) Model A RMM (continued)

4 Busy the MTADRIVER by typing

>BSY;BSY INB

and pressing the Enter key.

Example of a MAP display:

```
 CM     MS     IOD     Net     PM    CCS    LNS    Trks   Ext    Appl
 .      .       .       .       .      .      .      .      .      .
TTP
 0 Quit       POST    1            DELQ         BUSYQ          DIG
 2 Post_      TTP    6-009
 3 Seize_     CKT TYPE    PM NO. COM LANG     STA  S  R  DOT TE RESULT
 4            MISC   RMM  0  16  MATDRIVER  0 IDL
 5 Bsy_
 6 RTS_
 7 Tst_
 8
 9 CktInfo
10 CktLoc
11 Hold       TTP ID IS:   6-009
12 Next_      NO CKT, SET IS EMPTY
13 Rls_       TTP:
14 Ckt_       LAST CKTN  =  1
15 Trnslvf_   SHORT CLLI IS:  MTADRI
16 Stksdr_    OK, CKT POSTED
17 Pads_
18 Level_
```

5 Set the MAP display to the PM level and post the RMM by typing

>PM;POST RMM rmm_no

and pressing the Enter key.

where

rmm_no
is the number of the RMM where the card is to be removed

Example of a MAP display:

```
 CM     MS     IOD     Net     PM    CCS    LNS    Trks    Ext   Appl
  .      .      .       .       .      .      .      .       .     .
RMM              SysB     ManB     OffL     CBsy     ISTb      InSv
 0 Quit    PM       0        0        0        0        0       130
 2 Post_   RMM      0        0        0        0        0         0
 3
 4         RMM  5  INSV
 5 Trnsl
 6 Tst
 7 Bsy
 8 RTS
 9 OffL
10 LoadPM
11 Disp_
12 Next
13
14 QueryPM
15
16
17
18
```

6 Busy the RMM by typing

>BSY

and pressing the Enter key.

Example of a MAP display:

```
 CM     MS     IOD     Net     PM    CCS    LNS    Trks   Ext   Appl
 .      .      .       .     1ManB    .      .      .      .     .
RMM              SysB     ManB     OffL     CBsy     ISTb      InSv
 0 Quit    PM       4        0       10        0        0       130
 2 Post_   RMM      0        1        0        0        0         0
 3
 4         RMM  5  ManB
 5 Trnsl
 6 Tst
 7 Bsy
 8 RTS
 9 OffL
10 LoadPM
11 Disp_
12 Next
13
14 QueryPM
15
16
17
18
```

NT2X11 in an RSC-S (PCM-30) Model A RMM (continued)

At the RMM shelf

7

CAUTION
Static discharge may cause damage to circuit packs
Put on a wrist strap and connect it to the frame of the RMM before removing any cards. This protects the RMM against service degradation caused by static electricity.

Put on a wrist strap.

8 Remove the NT2X11 card as shown in the following figures.

a Locate the card to be removed on the appropriate shelf.

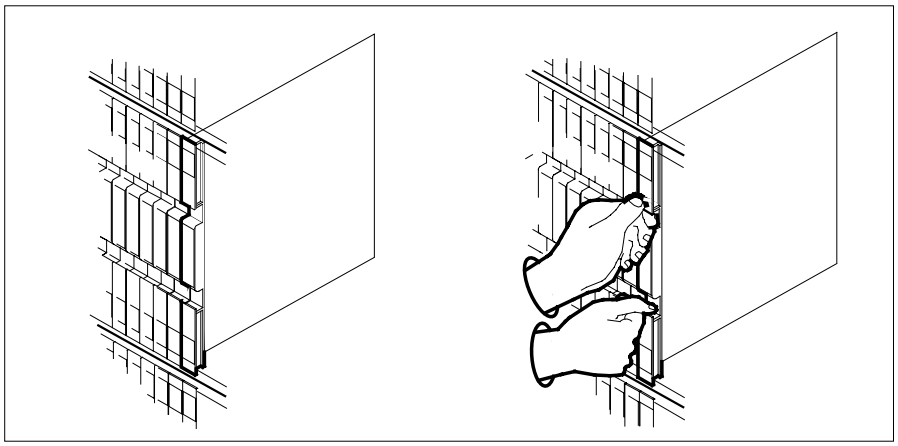

b Open the locking levers on the card to be replaced and gently pull the card toward you until it clears the shelf.

NT2X11
in an RSC-S (PCM-30) Model A RMM (continued)

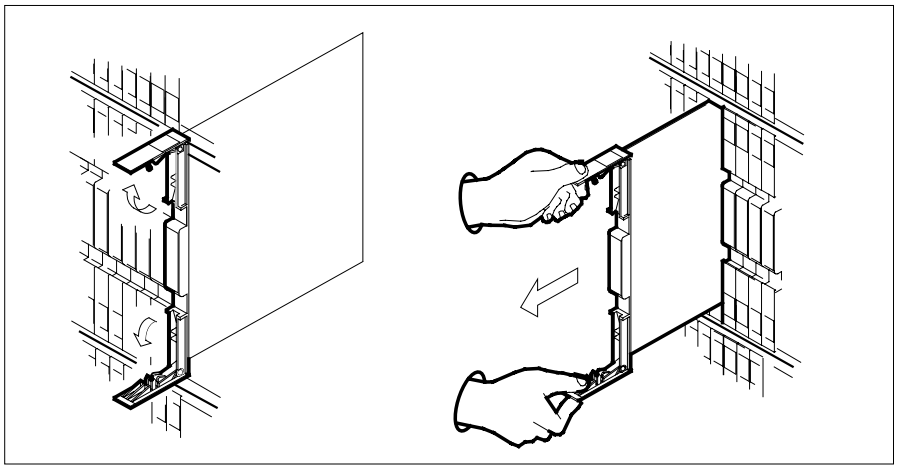

c Ensure the replacement card has the same PEC, including suffix, as the card you just removed.

9 Open the locking levers on the replacement card.

a Align the card with the slots in the shelf.

b Gently slide the card into the shelf.

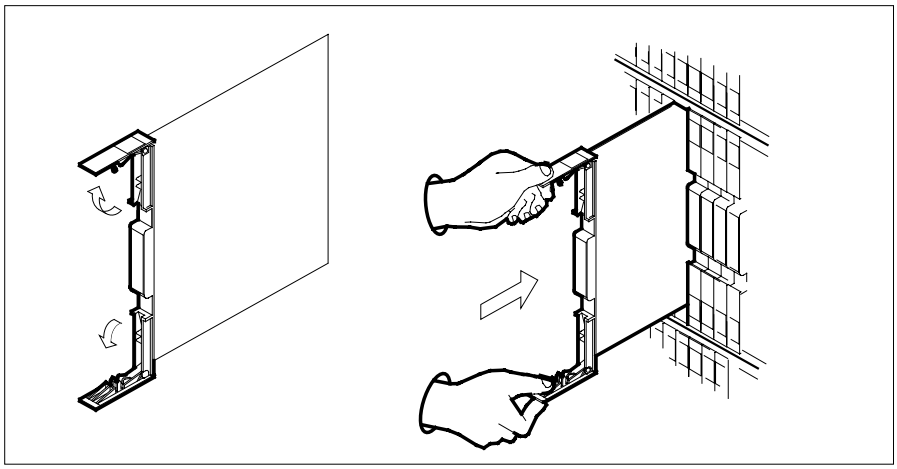

NT2X11 in an RSC-S (PCM-30) Model A RMM (continued)

10

DANGER
Equipment damage
Take these precautions when removing or inserting a card:

1. Do not apply direct pressure to the components.
2. Do not force the card into the slot.

Seat and lock the card.

a Using your fingers or thumbs, push on the upper and lower edges of the faceplate to ensure the card is fully seated in the shelf.

b Close the locking levers.

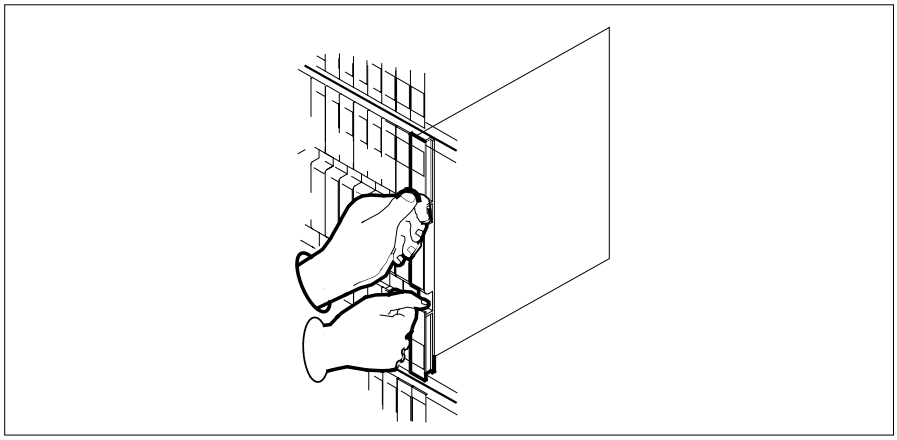

11 Use the following information to determine where to proceed.

If you entered this procedure from	Do
alarm clearing procedures	step 18
other	step 12

NT2X11 in an RSC-S (PCM-30) Model A RMM (end)

At the MAP terminal

12 Test the RMM by typing

>TST

and pressing the Enter key.

If TST	Do
passed	step 13
failed	step 18

13 Return the RMM to service by typing

>RTS

and pressing the Enter key.

If RTS	Do
passed	step 14
failed	step 19

14 Post the MTADRIVER by typing

>TRKS;TTP;POST P RMM rmm_no ckt_no

where

rmm_no
is the number of the RMM with the new MTADRIVER card

ckt_no
is the number of the new MTADRIVER card

and pressing the Enter key.

15 Return the MTADRIVER to service by typing

>BSY ALL;RTS ALL

and pressing the Enter key.

16 Send any faulty cards for repair according to local procedure.

17 Record the date the card was replaced, the serial number of the card, and the symptoms that prompted replacement of the card. Go to step 20.

18 Return to the *Alarm Clearing Procedures* that directed you to this procedure. At the point where a faulty card list was produced, identify the next faulty card on the list, and go to the appropriate card replacement procedure for that card in this manual.

19 Obtain further assistance in replacing this card by contacting operating company maintenance personnel.

20 You have successfully completed this procedure. Return to the maintenance procedure that directed you to this card replacement procedure and continue as directed.

NT2X48 in an IOPAC RMM

Application

Use this procedure to replace the following card in a remote maintenance module (RMM).

PEC	Suffix	Name
NT2X48	CC	Digitone receiver

Common procedures

The replacing a card procedure is referenced in this procedure:

Action

The following flowchart is a summary of the procedure. To replace the card, use the instructions in the step-action procedure that follows the flowchart.

NT2X48
in an IOPAC RMM (continued)

Summary of card replacement procedure for NT2X48 card in an RMM

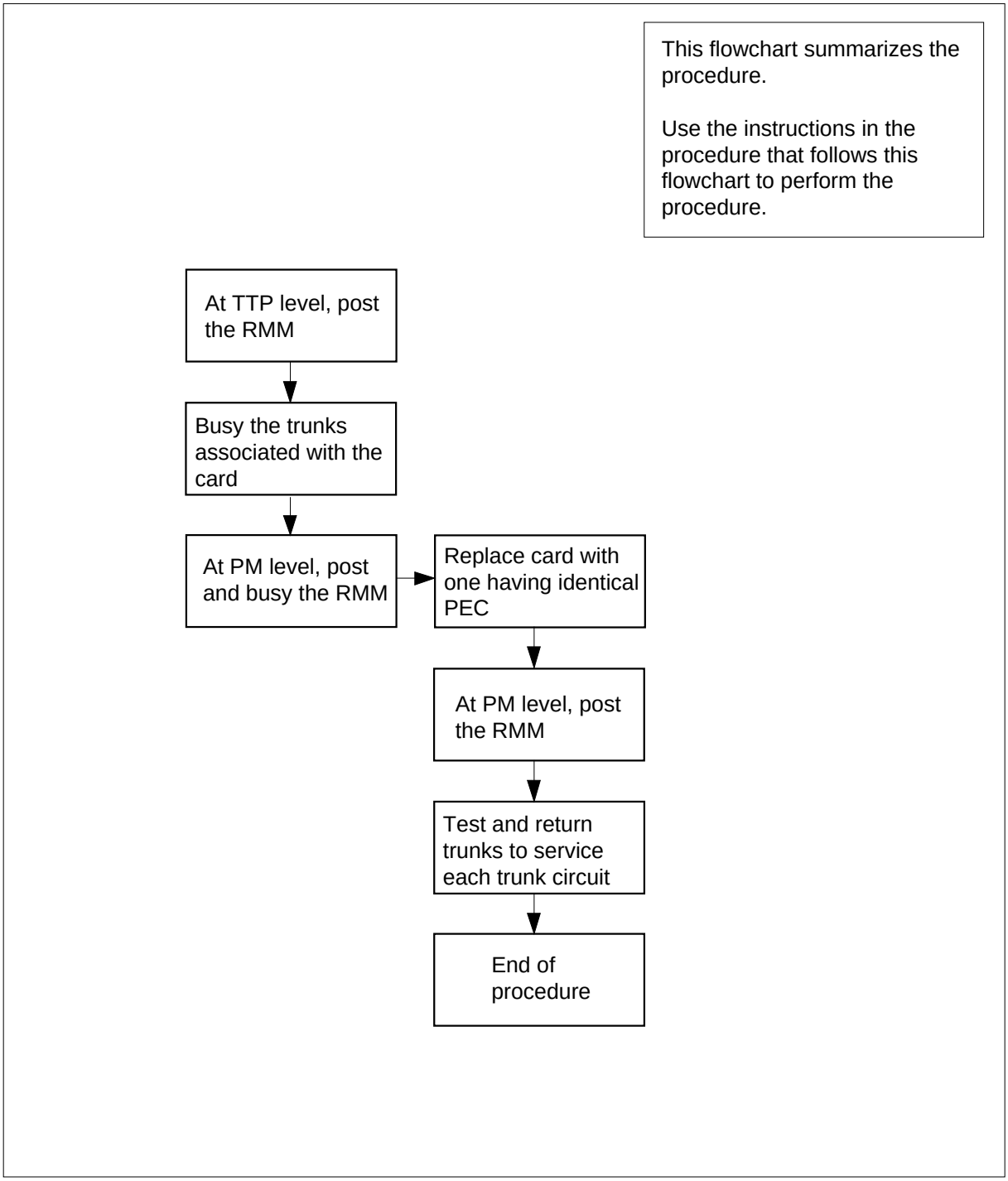

NT2X48
in an IOPAC RMM (continued)

Replacing an NT2X48 in an RMM

At the MAP terminal

1 Obtain a replacement card. Ensure the replacement card has the same product equipment code (PEC), including suffix, as the card to be removed.

2 Access the TTP level of the MAP display and post the RMM that contains the card to be replaced by typing

`>MAPCI;MTC;TRKS;TTP;POST TM RMM rmm_no ckt_no to ckt_no`

and pressing the Enter key.

where

rmm_no
is the number of the RMM shelf where the card is to be replaced

ckt_no
is the number of the trunk circuit associated with the card to be replaced

Example of a MAP response:

```
POST  3    DELQ       BUSY Q          DIG
TTP 6–006
CKT TYPE   PM NO.     COM LANG        STA S R DOT TE R
OG    MF RMM 0 0        ESADGTR  0     LO
                                       P_IDL

LAST CIRCUIT = 3
POST CKT IDLED
SHORT CLLI IS:  ESADGTR
OK, CLLI POSTED
```

3 Ensure the card being pulled is the correct card and is being pulled from the correct card slot.

`>CKTLOC`

and pressing the Enter key.

4 Busy the trunks associated with the card to be replaced by typing

`BSY ALL`

and pressing the Enter key.

At the RMM

5

WARNING
Static electricity damage
Wear a wrist strap connected to the wrist strap grounding point at the top of each equipment rack, (Bay 0, 1, 2, and 3), while handling circuit cards. This protects the cards against damage caused by static electricity.

Replace the NT2X48 card using the common replacing a card procedure in this document. When you have completed the procedure, return here.

At the MAP terminal

6 Go to the TRKS;TTP level of the MAP display and post the RMM by typing

```
TRKS;TTP;POST TM RMM rmm_no ckt_no to ckt_no
```

and pressing the Enter key.

where

rmm_no
is the number of the RMM shelf where the card is to be replaced

ckt_no
is the number of the trunk circuits associated with the card to be replaced

7 Go to the peripheral module (PM) level and place the first trunk circuit on hold and test the second circuit by typing

```
>HOLD
```

and pressing the Enter key

and then typing

```
>TST
```

and pressing the Enter key.

If TST	Do
passed	step 8
faileed	step 14

8 Return to service the tested circuit by typing

```
>RTS
```

and pressing the Enter key.

9 Place the untested circuit in the control position by typing

```
>NEXT 1
```

NT2X48 in an IOPAC RMM (end)

and pressing the Enter key.

10 Test the circuit by typing

>TST

If TST	Do
passed	step 12
failed	step 14

Note: Repeat steps 10 and 11 for circuits 2 and 3.

11 Return the circuit to service and clear the trunk test position by typing

>RTS;NEXT

and pressing the Enter key.

12 Send any faulty cards for repair according to local procedure.

13 Record the following items in office records:

- date the card was replaced
- serial number of the card
- symptoms that prompted replacement of the card

Go to step 15.

14 Obtain further assistance in replacing this card by contacting the personnel responsible for higher level of support.

15 You have completed this procedure.

NT2X48 in an OPM RMM

Application

Use this procedure to replace the following card in an RMM.

PEC	Suffixes	Name
NT2X48	AB	Digital 4-channel Digitone Receiver

Common procedures

The replacing a card procedure is referenced in this procedure.

Action

The following flowchart is a summary of the procedure. To replace the card, use the instructions in the procedure that follows the flowchart.

NT2X48
in an OPM RMM (continued)

Summary of card replacement procedure for an NT2X48 card in an RMM

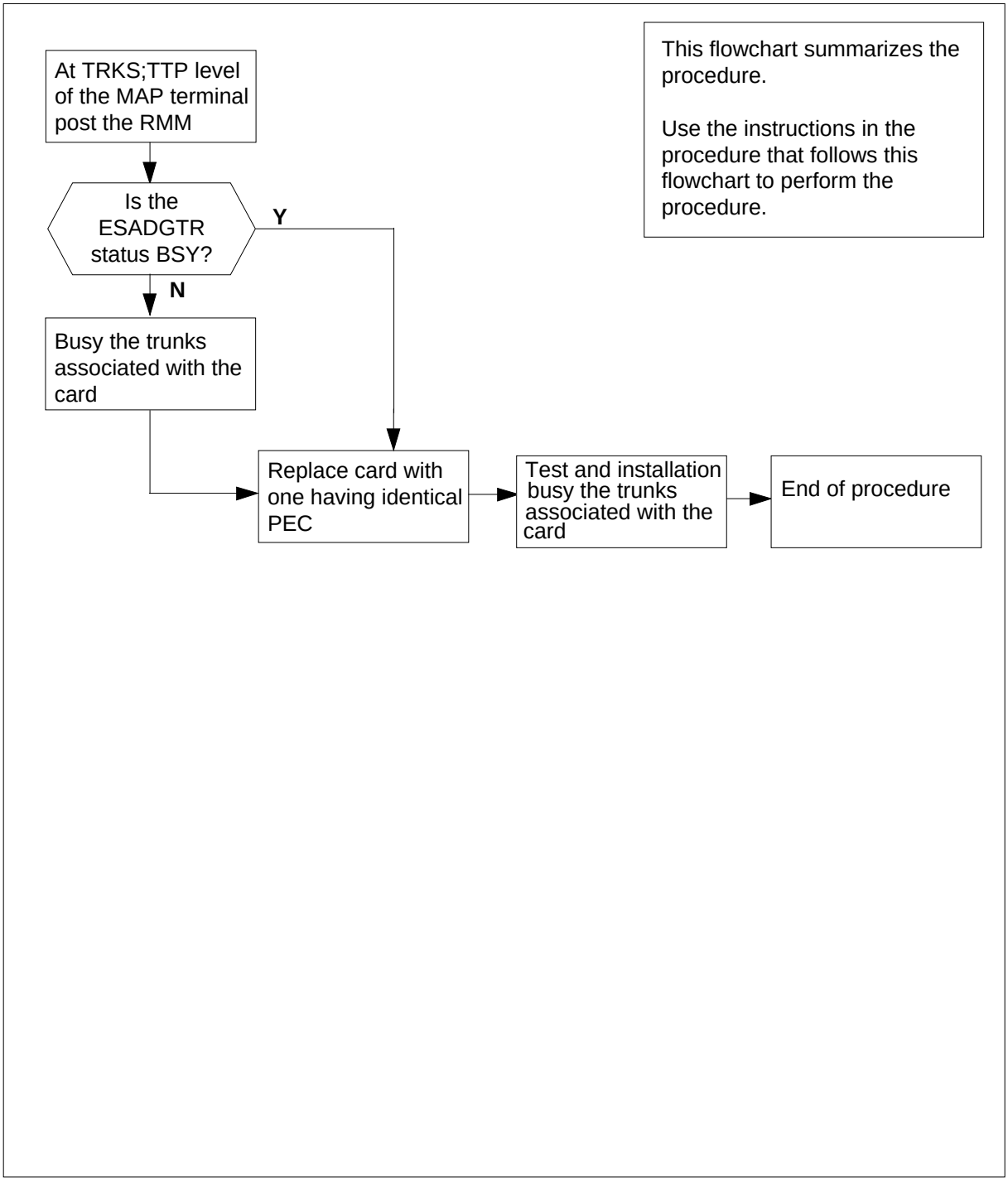

NT2X48
in an OPM RMM (continued)

Replacing an NT2X48 card in an RMM

At the MAP display

1 Obtain a replacement card. Ensure that the replacement card has the same product equipment code (PEC), including suffix, as the card to be removed.

2 Access the TTP level of the MAP and post the ESA digitone receivers associated with the card to be replaced by typing

`>MAPCI;MTC;TRKS;TTP;POST P RMM rmm_no ckt_no`

and pressing the Enter key.

where

rmm_no
is the number of the RMM shelf in which the card is to be replaced

ckt_no
is the number of the first circuit where the NT2X48 card is physically located.

Example of a MAP response:

```
LAST CIRCUIT = 27
POST CKT IDLED
SHORT CLLI IS:  1125
OK, CLLI POSTED

POST  3   DELQ       BUSY Q          DIG
TTP 6-006
CKT TYPE   PM NO.     COM LANG        STA S R DOT TE R
OG     RMM   0 0      ESAGDTR 11       INB
```

3 Busy the trunks that are associated with the card to be replaced by typing

`>BSY;NEXT`

and pressing the Enter key.

Note: Repeat this step for each circuit associated with the NT2X48 being replaced.

NT2X48
in an OPM RMM (continued)

At the RMM shelf

4

WARNING
Static electricity damage
Wear a wrist strap connected to the wrist strap grounding point of a frame supervisory panel (FSP) while handling circuit cards. This protects the cards against damage caused by static electricity.

Replace the NT2X48 card using the common replacing a card procedure in this document. When you have completed the procedure, return to this point.

At the MAP display

5 Test all of the digitone receivers on the new NT2X48 card by typing

>TST

6 Continue testing through all four digitone circuits on the card by typing

>NEXT

If TST	Do
passed	step 8
failed	step 11

7 Repost all four ESADGTR circuits by typing

>POST P RMM rmm_no ckt_no to ckt_no

and pressing the Enter key.

where

ckt_no
is the number of the first and last circuits on the NT2X48 card.

Example of a MAP response:

```
LAST CIRCUIT = 27
POST CKT IDLED
SHORT CLLI IS:  1125
OK, CLLI POSTED

POST  3   DELQ       BUSY Q          DIG
TTP 6-006
CKT TYPE   PM NO.     COM LANG        STA S R DOT TE R
OG     RMM   0 0      ESAGDTR 11       IDL
```

NT2X48
in an OPM RMM (end)

8 Installation busy the trunks that are associated with the new NT2X48 card by typing

```
>BSY INB ALL
```

and pressing the Enter key.

Note: ESA digitone receivers should always be in an INB state when the RLCM is under CC control, to prevent CC access. The ESA processor will turn the circuits up to an idle state when the RLCM is in the ESA environment.

9 Send any faulty cards for repair according to local procedure.

10 Record the following items in office records:

- date the card was replaced
- serial number of the card
- symptoms that prompted replacement of the card

Go to step 12.

11 Obtain further assistance in replacing this card by contacting the personnel responsible for higher level of support.

12 You have completed this procedure.

NT2X48 in an RLCM RMM

Application

Use this procedure to replace the following card in an RMM.

PEC	Suffixes	Name
NT2X48	AB	Digital 4-channel Digitone Receiver

Common procedures

The replacing a card procedure is referenced in this procedure.

Action

The following flowchart is a summary of the procedure. To replace the card, use the instructions in the procedure that follows the flowchart.

NT2X48
in an RLCM RMM (continued)

Summary of card replacement procedure for an NT2X48 card in an RMM

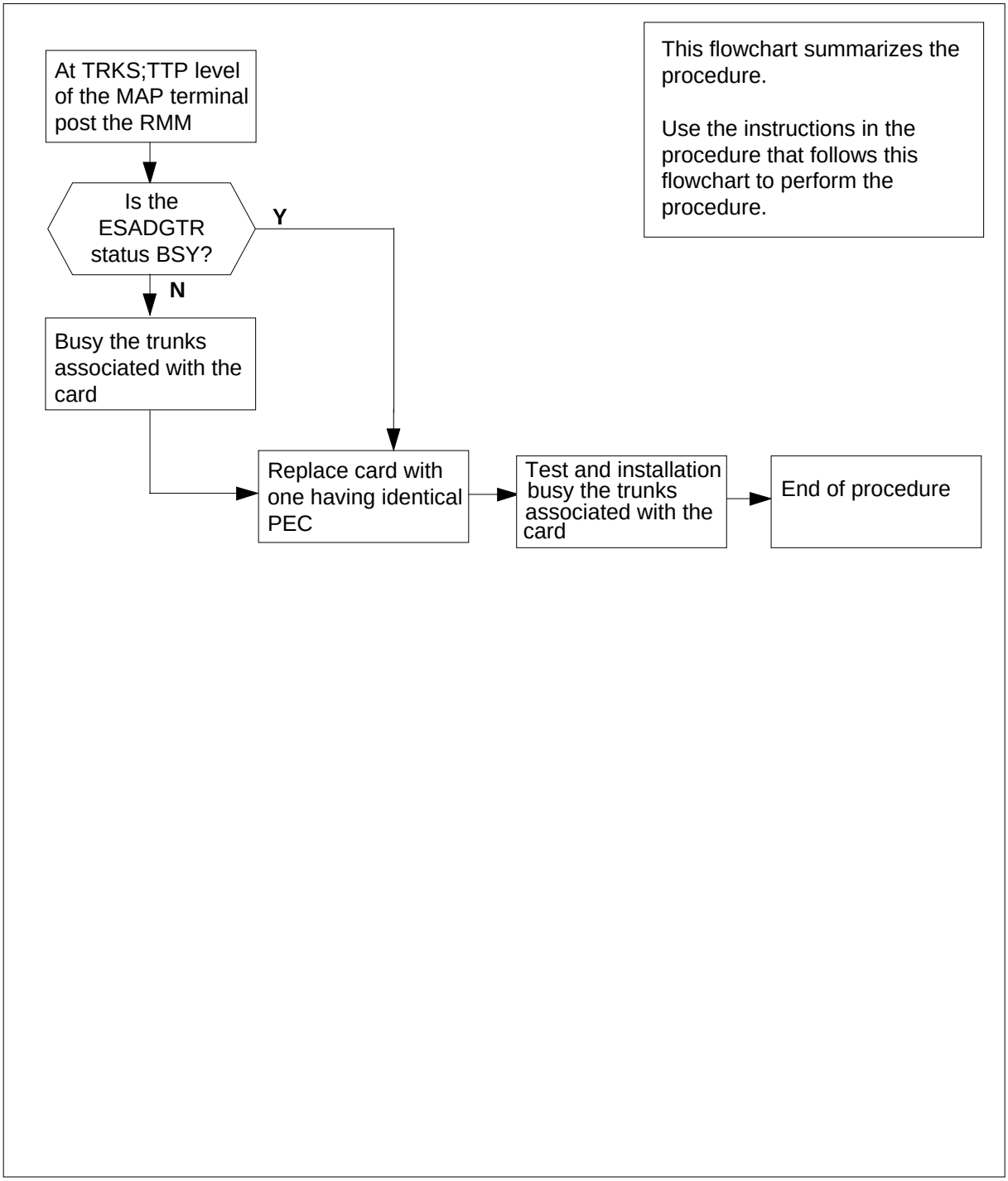

NT2X48
in an RLCM RMM (continued)

Replacing an NT2X48 card in an RMM

At your current location

1 Obtain a replacement card. Ensure that the replacement card has the same product equipment code (PEC), including suffix, as the card to be removed.

At the MAP display

2 Access the TTP level of the MAP and post the ESA digitone receivers associated with the card to be replaced by typing

>MAPCI;MTC;TRKS;TTP;POST P RMM rmm_no ckt_no

and pressing the Enter key.

where

rmm_no
is the number of the RMM shelf in which the card is to be replaced

ckt_no
is the number of the first circuit where the NT2X48 card is physically located.

Example of a MAP response:

```
LAST CIRCUIT = 27
POST CKT IDLED
SHORT CLLI IS:  1125
OK, CLLI POSTED

POST  3   DELQ       BUSY Q          DIG
TTP 6–006
CKT TYPE   PM NO.     COM LANG        STA S R DOT TE R
OG     RMM   0 0      ESAGDTR 11       CFL
```

3 Busy and installation busy the trunks that are associated with the card to be replaced by typing

>BSY;BSY INB;NEXT

and pressing the Enter key.

Note: Repeat this step for each circuit associated with the NT2X48 being replaced.

NT2X48
in an RLCM RMM (continued)

At the RMM shelf

4

WARNING
Static electricity damage
Wear a wrist strap connected to the wrist strap grounding point of a frame supervisory panel (FSP) while handling circuit cards. This protects the cards against damage caused by static electricity.

Replace the NT2X48 card using the common replacing a card procedure in this document. When you have completed the procedure, return to this point.

At the MAP display

5 Test all of the digitone receivers on the new NT2X48 card by typing

>TST

6 Continue testing through all four digitone circuits on the card by typing

>NEXT

If TST	Do
passed	step 7
failed	step 11

7 Repost all four ESADGTR circuits by typing

>POST P RMM rmm_no ckt_no to ckt_no

and pressing the Enter key.

where

ckt_no
is the number of the first and last circuits on the NT2X48 card.

Example of a MAP response:

```
LAST CIRCUIT = 27
POST CKT IDLED
SHORT CLLI IS:  1125
OK, CLLI POSTED

POST  3   DELQ       BUSY Q          DIG
TTP 6-006
CKT TYPE   PM NO.     COM LANG        STA S R DOT TE R
OG     RMM   0 0      ESAGDTR 11       IDL
```

NT2X48
in an RLCM RMM (end)

8 Installation busy the trunks that are associated with the new NT2X48 card by typing

```
>BSY INB ALL
```

and pressing the Enter key.

Note: ESA digitone receivers should always be in an INB state when the RLCM is under CC control, to prevent CC access. The ESA processor will turn the circuits up to an idle state when the RLCM is in the ESA environment.

9 Send any faulty cards for repair according to local procedure.

10 Record the following items in office records:

- date the card was replaced
- serial number of the card
- symptoms that prompted replacement of the card

Go to step 12.

11 Obtain further assistance in replacing this card by contacting the personnel responsible for higher level of support.

12 You have completed this procedure.

NT2X55 in an RSC RMM

Application

Use this procedure to replace the following card in an RSC RMM.

PEC	Suffixes	Name
NT2X55	AA	Signaling distribution (SD) card type 2

Common Procedures

None

Action

The following flowchart is a summary of the procedure. To replace the card, use the instructions in the procedure that follows the flowchart.

NT2X55
in an RSC RMM (continued)

Summary of card replacement procedure for NT2X55 card in RSC RMM

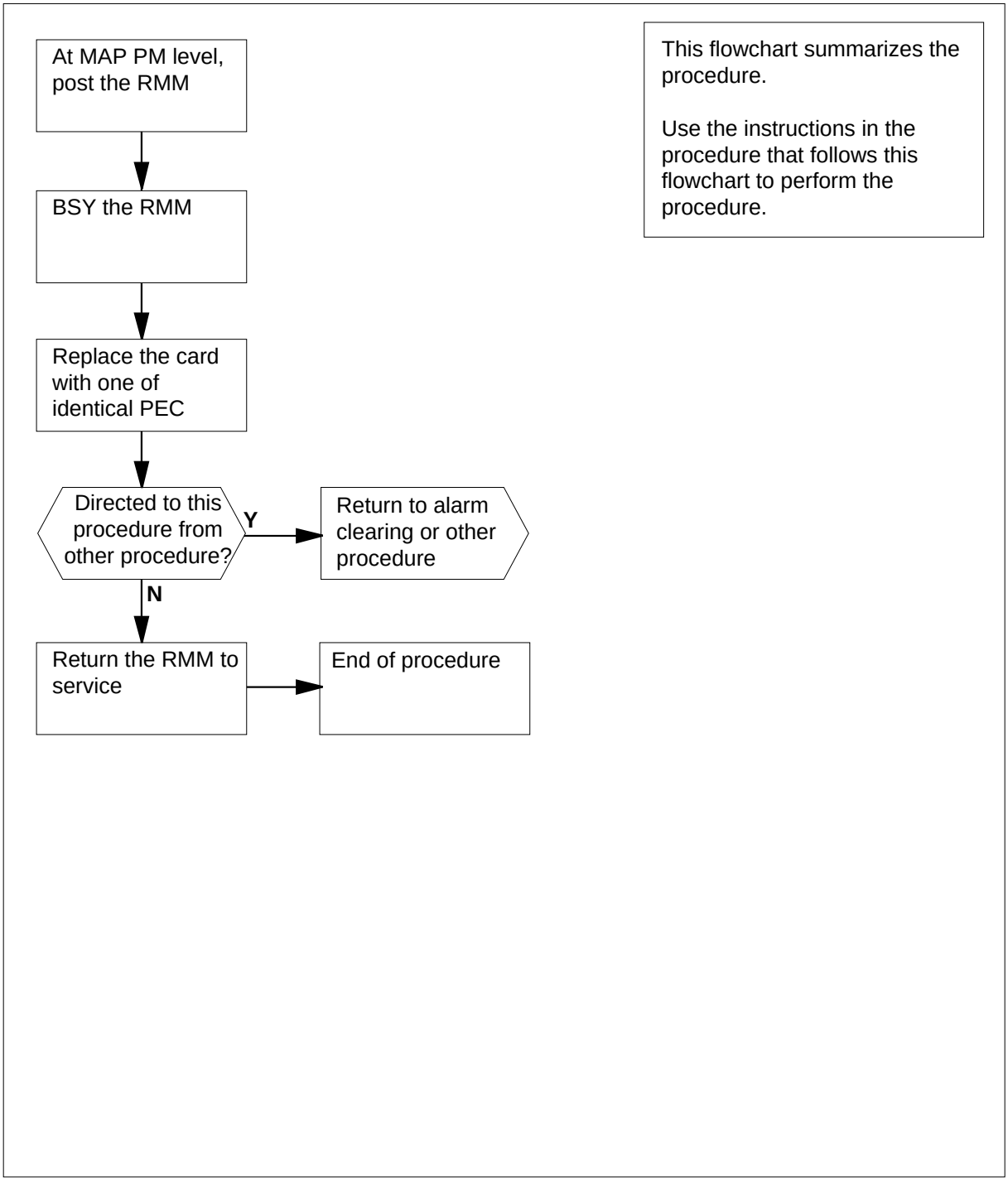

Replacing an NT2X55 card in an RSC RMM

At your current location

1 Proceed only if you were either directed to this card replacement procedure from a step in a maintenance procedure, are using the procedure to verify or accept cards, or were directed to this procedure by your maintenance support group.

2 Obtain a replacement card. Ensure the replacement card has the same product equipment code (PEC) including suffix, as the card to be removed.

At the MAP display

3 Access the PM level and post the RMM by typing

>MAPCI;MTC;PM;POST RMM rmm_no

and pressing the Enter key.

where

rmm_no
is the number of the RMM where the card is to be removed

Example of a MAP display:

```
CM    MS     IOD    Net     PM    CCS    LNS     Trks     Ext    APPL
 .     .      .      .     4SysB   .      .       .        .       .

RMM                SysB     ManB     OffL     CBsy     ISTb     InSv
 0 Quit     PM       4        0        10       3        3       130
 2 Post_    RMM      0        1         1       0        0        2
 3
 4          RMM  5  INSV
 5 Trnsl
 6 Tst
 7 Bsy
 8 RTS
 9 OffL
10 LoadPM
11 Disp_
12 Next
13
14 QueryPM
15
16
17
18
```

4 Busy the RMM by typing

>BSY

and pressing the Enter key.

NT2X55
in an RSC RMM (continued)

Example of a MAP display:

```
   CM    MS    IOD    Net    PM    CCS    LNS    Trks    Ext    APPL
   .     .      .      .    4SysB   .      .       .      .      .

RMM              SysB     ManB     OffL     CBsy     ISTb      InSv
 0 Quit    PM       4        0       10        3        3       130

 2 Post_   RMM      0        1        1        0        0         2
 3
 4         RMM  5  ManB
 5 Trnsl
 6 Tst
 7 Bsy
 8 RTS
 9 OffL
10 LoadPM
11 Disp_
12 Next
13
14 QueryPM
15
16
17
18
```

At the RMM shelf

5

CAUTION
Static discharge may cause damage to circuit packs
Put on a wrist strap and connect it to the frame of the RMM before removing or inserting any cards. This protects the RMM against service degradation caused by static electricity.

Put on a wrist strap.

6

DANGER
Equipment damage
Take these precautions when removing or inserting a card:

1. Do not apply direct pressure to the components.
2. Do not force the cards into the slots.

NT2X55
in an RSC RMM (continued)

Remove the NT2X55 card as shown in the following figures.

a Locate the card to be removed on the appropriate shelf.

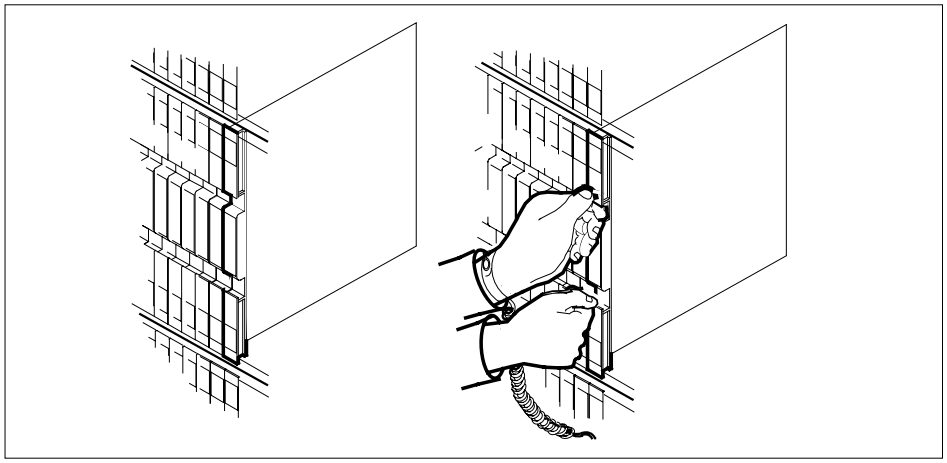

b Open the locking levers on the card to be replaced and gently pull the card towards you until it clears the shelf.

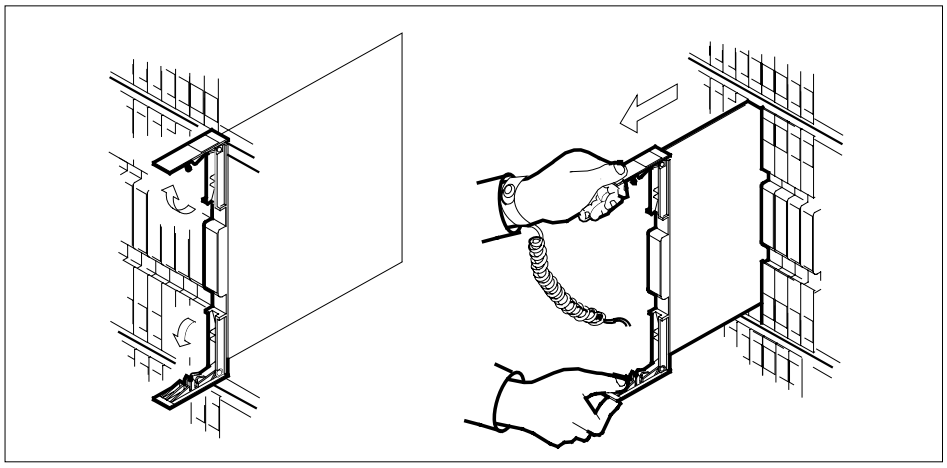

c Ensure the replacement card has the same PEC, including suffix, as the card you just removed.

7 Open the locking levers on the replacement card.

Align the card with the slots in the shelf and gently slide the card into the shelf.

NT2X55
in an RSC RMM (continued)

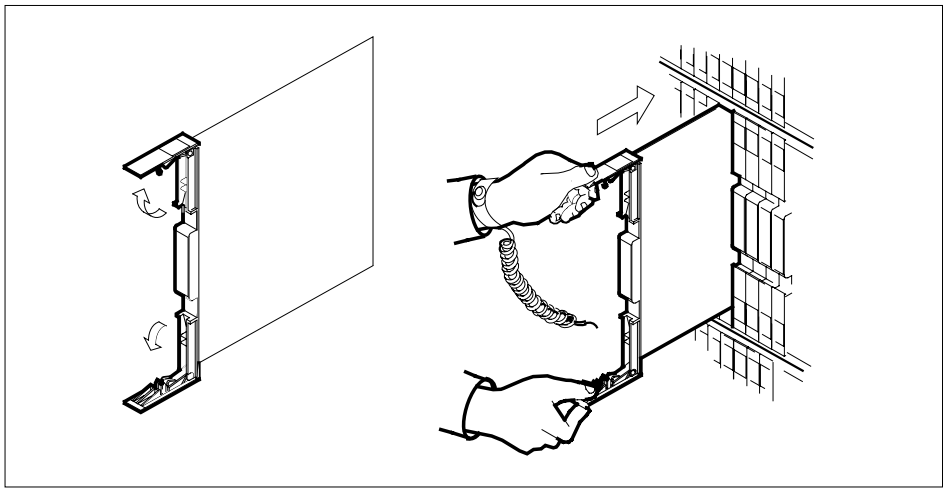

8 Seat and lock the card.

a Using your fingers or thumbs, push on the upper and lower edges of the faceplate to ensure the card is fully seated in the shelf.

b Close the locking levers.

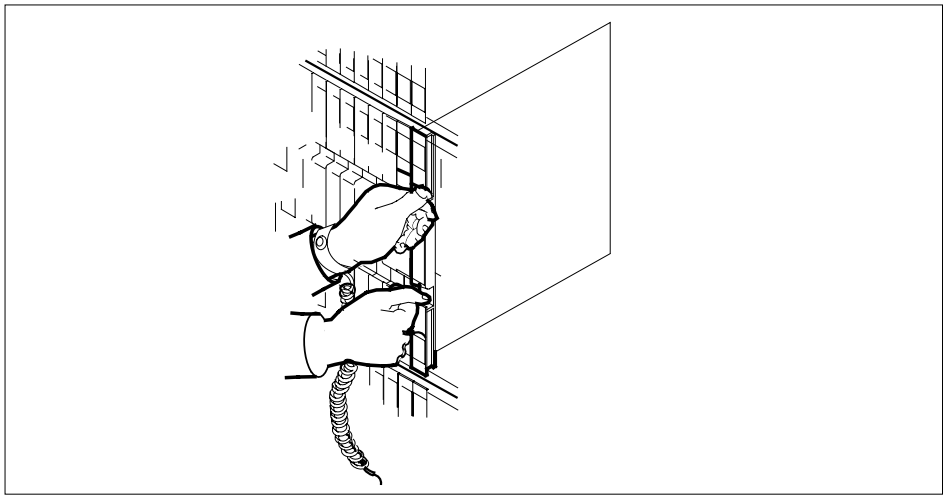

9 Use the following information to determine the next step in this procedure.

If you entered this procedure from	Do
an alarm clearing procedure	step 14
other	step 10

NT2X55 in an RSC RMM (end)

At the MAP display

10 Return the RMM to service by typing

>RTS

and pressing the Enter key.

If the RTS	Do
passes	step 11
fails	step 15

11 Send any faulty cards for repair according to local procedure.

12 Record the following items in office records:

- date the card was replaced
- serial number of the card
- symptoms that prompted replacement of the card

13 Go to step 16.

14 Return to the *Alarm Clearing Procedure* that directed you to this card replacement procedure. If necessary, go to the point where the faulty card list was produced, identify the next faulty card on the list, and go to the appropriate replacement procedure in this manual for that card.

15 Obtain further assistance in replacing this card by contacting personnel responsible for higher level of support.

16 You have successfully completed this procedure. Return to the maintenance procedure that directed you to this card replacement procedure and continue as directed.

NT2X57 in an IOPAC RMM

Application

Use this procedure to replace the following card in a remote maintenance module (RMM).

PEC	Suffix	Name
NT2X57	AA	Signal distribution card (type 1)

Common procedures

The replaing a card procedure is referenced in this procedure.

Action

The following flowchart is a summary of the procedure. To replace the card, use the instructions in the step-action procedure that follows the flowchart.

NT2X57 in an IOPAC RMM (continued)

Summary of card replacement procedure for NT2X57 card in an RMM

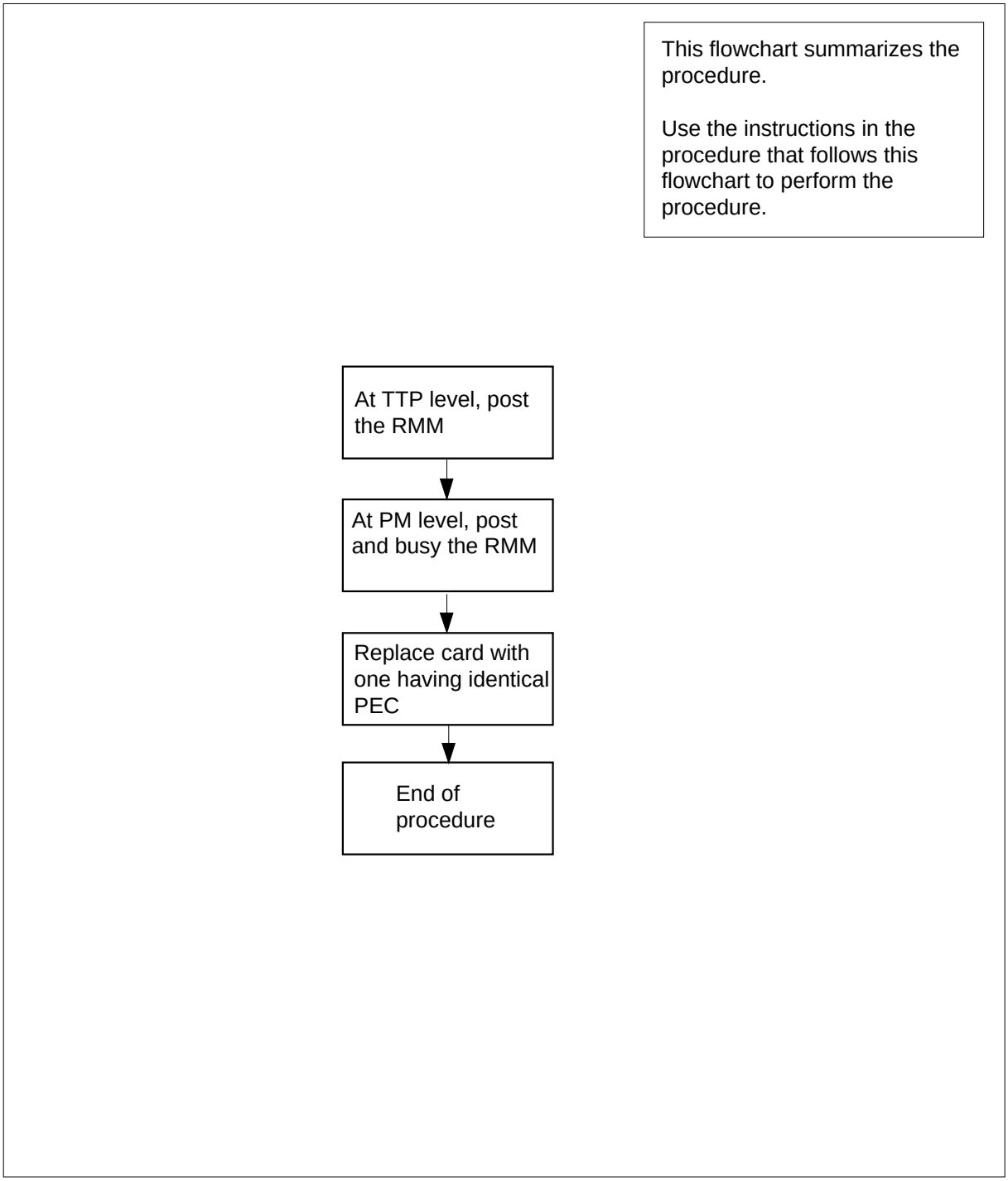

NT2X57 in an IOPAC RMM (continued)

Replacing an NT2X57 in an RMM

At the MAP terminal

1 Get a replacement card. Ensure the replacement card has the same product equipment code (PEC), including suffix, as the card to be removed.

2 Access the trunk test position (TTP) level of the MAP display and post the RMM that contains the card to be replaced by typing

```
MAPCI;MTC;TRKS;TTP;POST P RMM rmm_no ckt_no to ckt_no
```

and pressing the Enter key.

where

rmm_no
is the number of the RMM shelf where the card is to be replaced

ckt_no
is the number of the circuit associated with the card to be replaced

3 Ensure the correct circuit card is removed from the shelf by typing

```
>CKTLOC
```

and pressing the Enter key.

At the RMM

4

WARNING
Static electricity damage
Wear a wrist strap connected to the wrist strap grounding point at the top of each equipment rack, (Bay 0, 1, 2, and 3), while handling circuit cards. This protects the cards against damage caused by static electricity.

Replace the NT2X57 card using the common replacing a card procedure in this document. When you have completed the procedure, return here.

5 If you were directed to this procedure from the Alarm Clearing Procedures, return to the alarm clearing procedure that directed you here. Otherwise, continue with step 6.

6 Send any faulty cards for repair according to local procedure.

7 Record the following items in office records:

- date the card was replaced
- serial number of the card
- symptoms that prompted replacement of the card

NT2X57 in an IOPAC RMM (end)

Go to step 9.

8 Get more assistance in replacing this card by contacting the personnel responsible for higher-level support.

9 You have completed this procedure.

NT2X57 in an OPM RMM

Application

Use this procedure to replace the following card in an RMM.

PEC	Suffixes	Name
NT2X57	AA	Signal Distribution Card (SD)

Common procedures

The common replacing a card procedure is referenced in this procedure.

Action

The following flowchart is a summary of the procedure. To replace the card, use the instructions in the procedure that follows the flowchart.

NT2X57
in an OPM RMM (continued)

Summary of card replacement procedure for an NT2X57 card in an RMM

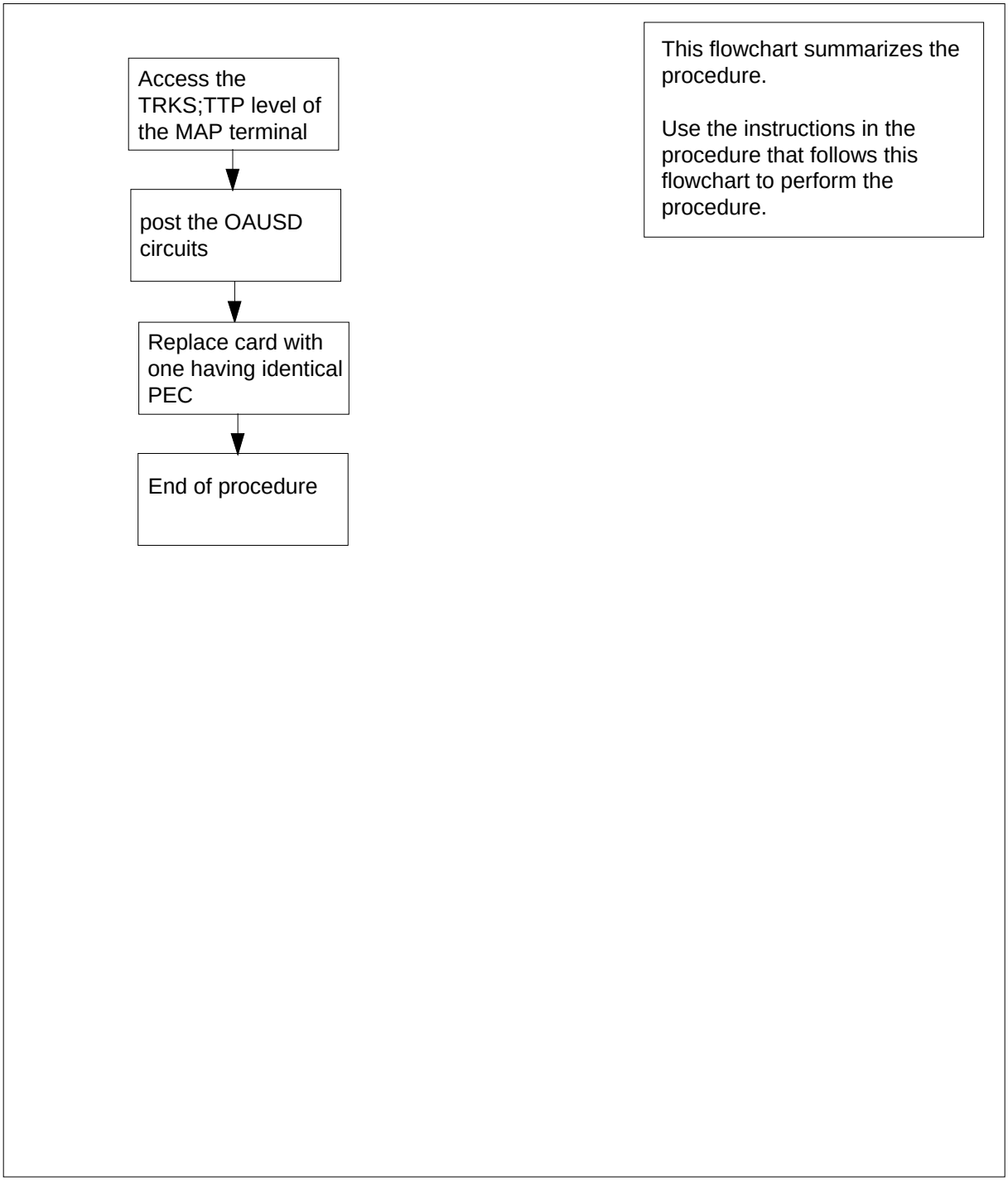

NT2X57
in an OPM RMM (continued)

Replacing an NT2X57 card in an RMM

At the MAP display

1 Obtain a replacement card. Ensure that the replacement card has the same product equipment code (PEC), including suffix, as the card to be removed.

2 Access the TTP level of the MAP and post the signal distribution circuits on the card to be replaced by typing

`>MAPCI;MTC;TRKS;TTP;POST P RMM rmm_no ckt_no`

and pressing the Enter key.

where

rmm_no
is the number of the RMM shelf where the card is to be replaced

ckt_no
is the number of the first circuit where the NT2X57 card is physically located.

Example of a MAP response:

```
LAST CIRCUIT = 14
POST CKT IDLED
SHORT CLLI IS:  1147
OK, CLLI POSTED

POST  13   DELQ       BUSY Q          DIG
TTP 6-006
CKT TYPE   PM NO.     COM LANG        STA S R DOT TE R
OG TESTEQ RMM 0 0     OAUSD 0         IDL
```

At the RMM shelf

3

WARNING
Static electricity damage
Wear a wrist strap connected to the wrist strap grounding point of a frame supervisory panel (FSP) while handling circuit cards. This protects the cards against damage caused by static electricity.

Replace the NT2X57 card using the common replacing a card procedure in this document. When you have completed the procedure, return to this point.

NT2X57 in an OPM RMM (end)

At the MAP display

4 Repost to verify the signal distribution circuits on the card that was replaced by typing

`>POST P RMM rmm_no ckt_no`

and pressing the Enter key.

where

rmm_no
is the number of the RMM shelf where the card was replaced

ckt_no
is the number of the first circuit where the NT2X57 card is physically located.

Example of a MAP response:

```
LAST CIRCUIT = 14
POST CKT IDLED
SHORT CLLI IS:  1147
OK, CLLI POSTED

POST  13   DELQ       BUSY Q          DIG
TTP 6–006
CKT TYPE   PM NO.     COM LANG        STA S R DOT TE R
OG TESTEQ RMM 0 0     OAUSD 0         IDL
```

5 Send any faulty cards for repair according to local procedure.

6 Record the following items in office records:

- date the card was replaced
- serial number of the card
- symptoms that prompted replacement of the card

Go to step 8.

7 Obtain further assistance in replacing this card by contacting the personnel responsible for higher level of support.

8 You have completed this procedure.

NT2X57 in an RLCM-EDC RMM

Application

Use this procedure to replace a card in the shelves or frames identified in the following table.

PEC	Suffixes	Cardname	Shelf/frame name
NT2X57	AA	Signal Distribution Card (SD)	RMM/RLCC

If you cannot identify the PEC, suffix, and shelf or frame for the card you want to replace, refer to the Index. Refer to the maintenance manual Index for a list of cards, shelves, and frames.

Common procedures

The common replacing a card procedure in referred to in this procedure.

Action

This procedure contains a summary flowchart and a list of steps. Use the flowchart to review the procedure. Follow the steps to perform the procedure.

NT2X57
in an RLCM-EDC RMM (continued)

Summary of replacing an NT2X57 card in RMM

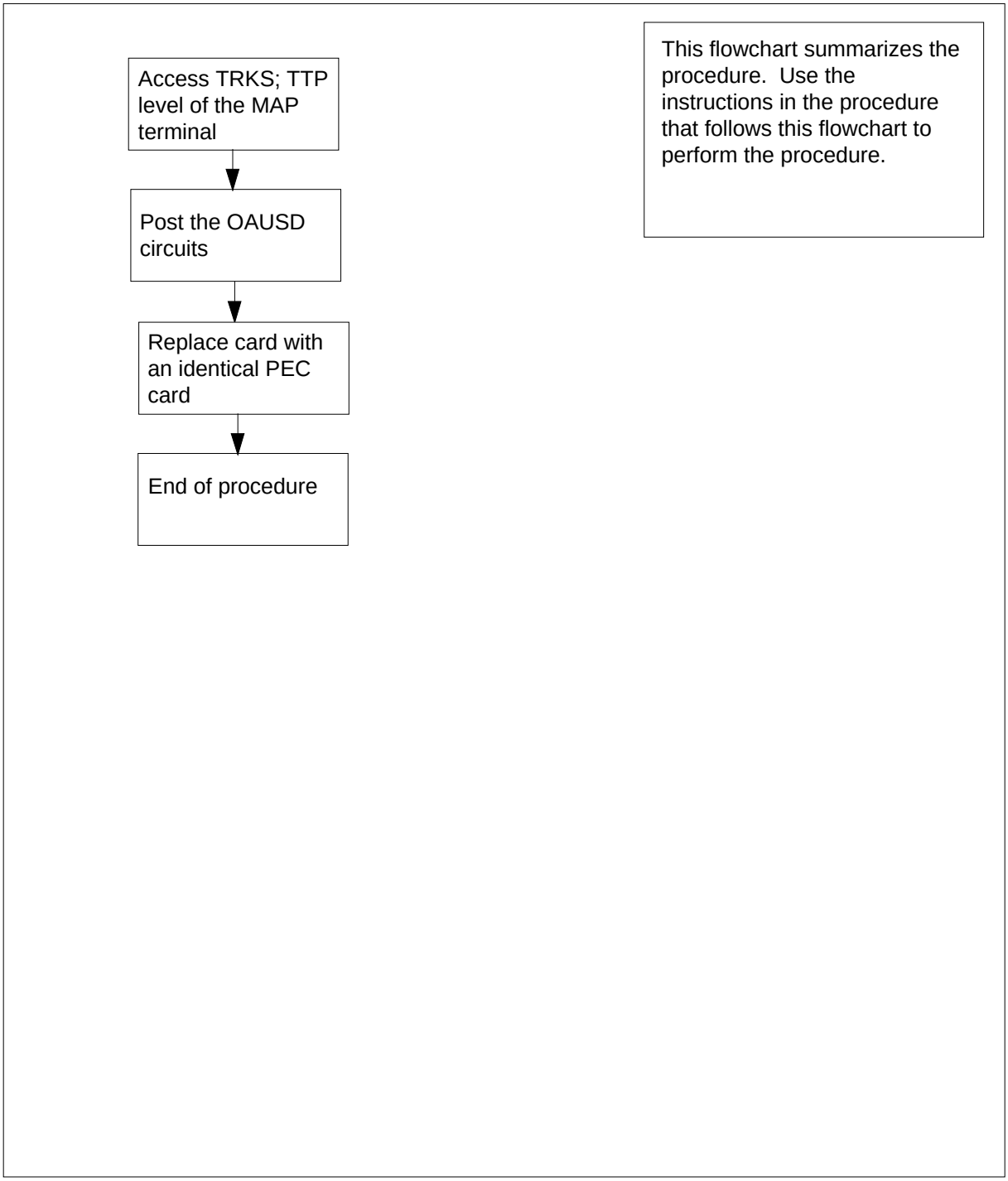

NT2X57
in an RLCM-EDC RMM (continued)

Replacing an NT2X57

At your current location

1 Obtain a replacement card. Make sure the replacement card has the same product equipment code (PEC), and PEC suffix.

At the MAP display

2 To access the TTP level of the MAP display and post the signal distribution circuits on the card, type

`>MAPCI;MTC;TRKS;TTP;POST P RMM rmm_no ckt_no`

and press the Enter key.

where

rmm_no
is the number of the RMM shelf, the location of the card to remove.

ckt_no
is the number of the first circuit and the location of the NT2X57 card.

Example of a MAP response:

```
LAST CIRCUIT = 14
POST CKT IDLED
SHORT CLLI IS:  1147
OK, CLLI POSTED

POST  13   DELQ       BUSY Q          DIG
TTP 6–006
CKT TYPE   PM NO.     COM LANG        STA S R DOT TE R
OG TESTEQ RMM 0 0     OAUSD 0         IDL
```

At the RMM shelf

3

WARNING
Static electricity damage
Wear a wrist strap connected to the wrist-strap grounding point of a frame supervisory panel (FSP) to handle circuit cards. The wrist strap protects the cards against static electricity damage.

To replace the NT2X57 card, use the common replacing a card procedure in this document. When the procedure is complete, return to this point.

NT2X57 in an RLCM-EDC RMM (end)

At the MAP terminal

4 To verify the signal distribution circuits on the removed card, type

>POST P RMM rmm_no ckt_no

and press the Enter key.

where

rmm_no
is the number of the RMM shelf, the location of the replaced card

ckt_no
is the number of the first circuit and the location of the NT2X5 card.

Example of a MAP response:

```
LAST CIRCUIT = 14
POST CKT IDLED
SHORT CLLI IS:  1147
OK, CLLI POSTED

POST  13   DELQ       BUSY Q          DIG
TTP 6–006
CKT TYPE   PM NO.     COM LANG        STA S R DOT TE R
OG TESTEQ RMM 0 0     OAUSD 0         IDL
```

5 To send defective cards for repair, follow the local procedures.

6 Record information for office records, as follows:

- date of card replacement
- serial number of the card
- details or reasons for replacement of the card

Go to step 8.

7 For additional help, contact the next level of maintenance.

8 The procedure is complete.

NT2X57 in an RLCM RMM

Application

Use this procedure to replace the following card in an RMM.

PEC	Suffixes	Name
NT2X57	AA	Signal Distribution Card (SD)

Common procedures

The common replacing a card procedure is referenced in this procedure.

Action

The following flowchart is a summary of the procedure. To replace the card, use the instructions in the procedure that follows the flowchart.

NT2X57
in an RLCM RMM (continued)

Summary of card replacement procedure for an NT2X57 card in an RMM

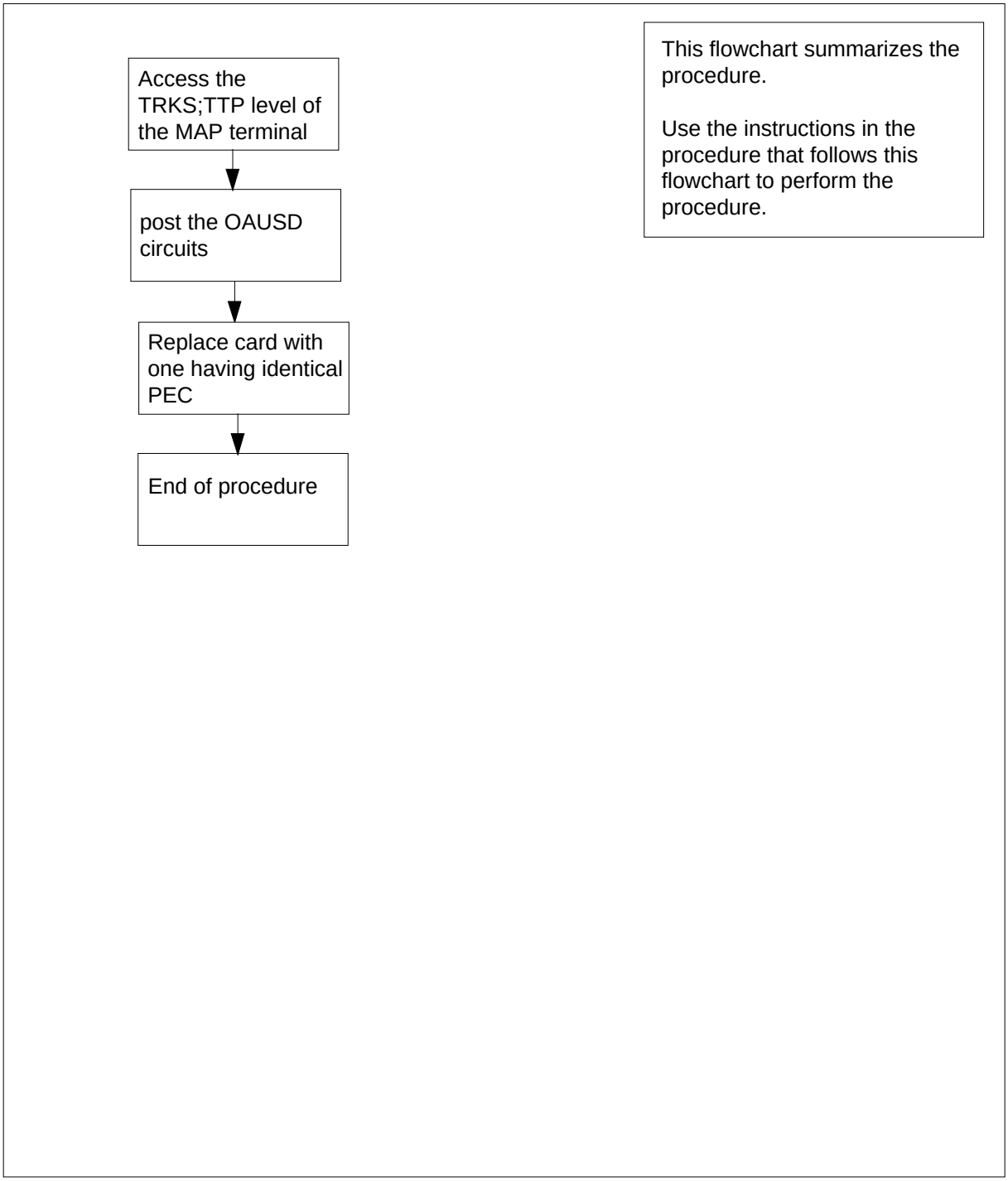

NT2X57 in an RLCM RMM (continued)

Replacing an NT2X57 card in an RMM

At your current location

1 Obtain a replacement card. Ensure that the replacement card has the same product equipment code (PEC), including suffix, as the card to be removed.

At the MAP display

2 Access the TTP level of the MAP and post the signal distribution circuits on the card to be replaced by typing

`>MAPCI;MTC;TRKS;TTP;POST P RMM rmm_no ckt_no`

and pressing the Enter key.

where

rmm_no
is the number of the RMM shelf where the card is to be replaced

ckt_no
is the number of the first circuit where the NT2X57 card is physically located.

Example of a MAP response:

```
LAST CIRCUIT = 14
POST CKT IDLED
SHORT CLLI IS:  1147
OK, CLLI POSTED

POST  13   DELQ       BUSY Q          DIG
TTP 6–006
CKT TYPE   PM NO.     COM LANG        STA S R DOT TE R
OG TESTEQ RMM 0 0     OAUSD 0         IDL
```

At the RMM shelf

3

WARNING
Static electricity damage
Wear a wrist strap connected to the wrist strap grounding point of a frame supervisory panel (FSP) while handling circuit cards. This protects the cards against damage caused by static electricity.

Replace the NT2X57 card using the common replacing a card procedure in this document. When you have completed the procedure, return to this point.

At the MAP display

4 Repost to verify the signal distribution circuits on the card that was replaced by typing

`>POST P RMM rmm_no ckt_no`

and pressing the Enter key.

where

rmm_no
is the number of the RMM shelf where the card was replaced

ckt_no
is the number of the first circuit where the NT2X57 card is physically located.

Example of a MAP response:

```
LAST CIRCUIT = 14
POST CKT IDLED
SHORT CLLI IS:  1147
OK, CLLI POSTED

POST  13   DELQ       BUSY Q          DIG
TTP 6-006
CKT TYPE   PM NO.     COM LANG        STA S R DOT TE R
OG TESTEQ RMM 0 0     OAUSD 0         IDL
```

5 Send any faulty cards for repair according to local procedure.

6 Record the following items in office records:

- date the card was replaced
- serial number of the card
- symptoms that prompted replacement of the card

Go to step 8.

NT2X57 in an RLCM RMM (end)

7 Obtain further assistance in replacing this card by contacting the personnel responsible for higher level of support.

8 You have completed this procedure.

NT2X57 in an RSC RMM

Application

Use this procedure to replace the following card in an RSC RMM.

PEC	Suffixes	Name
NT2X57	AA	Signal distribution (SD) card

Common Procedures

None

Action

The following flowchart is a summary of the procedure. To replace the card, use the instructions in the procedure that follows the flowchart.

NT2X57
in an RSC RMM (continued)

Summary of card replacement procedure for NT2X57 card in an RSC RMM

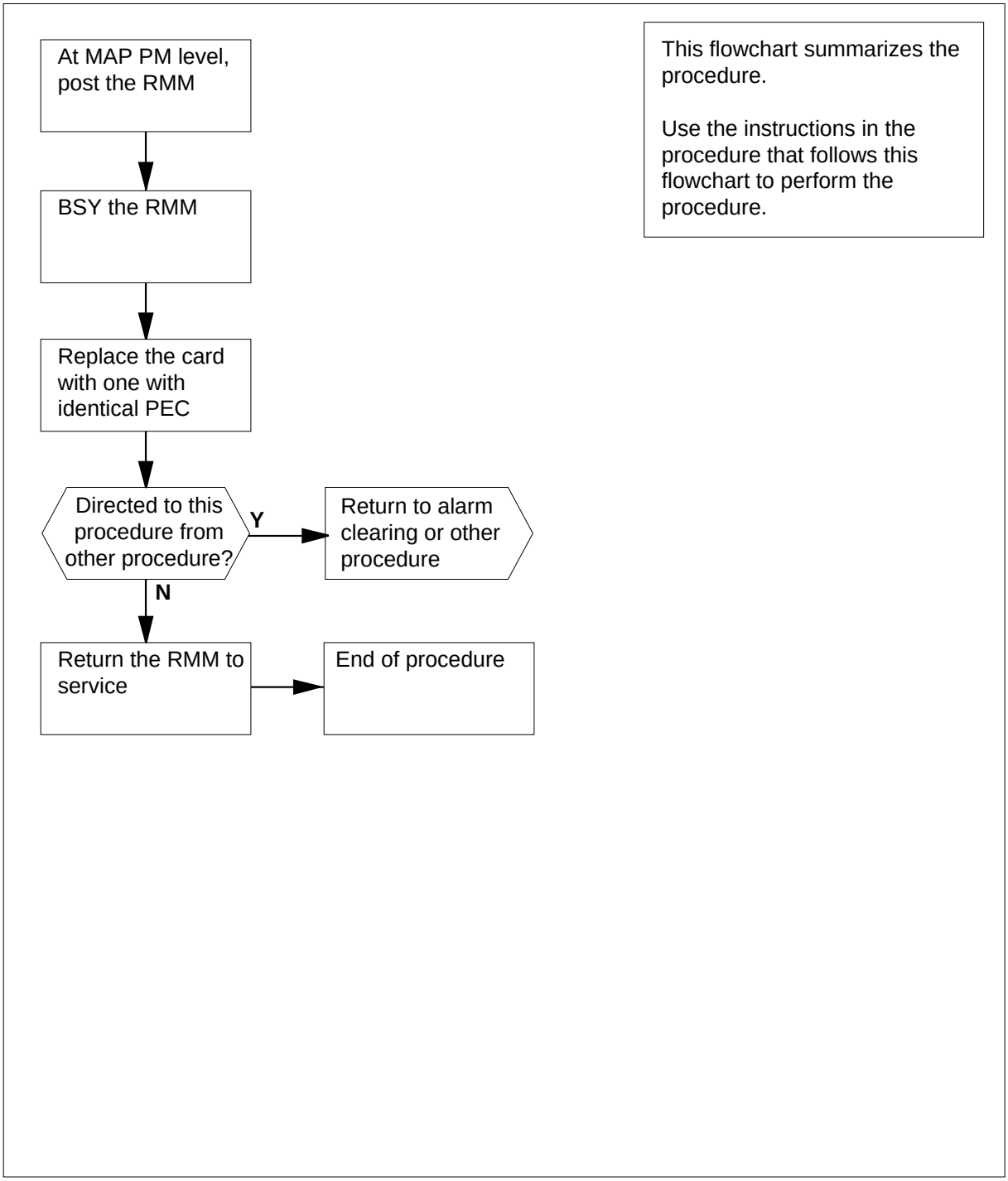

Replacing an NT2X57 card in RSC RMM

At your current location

1 Proceed only if you were either directed to this card replacement procedure from a step in a maintenance procedure, are using the procedure to verify or accept cards, or were directed to this procedure by your maintenance support group.

2 Obtain a replacement card. Ensure the replacement card has the same product equipment code (PEC) including suffix, as the card to be removed.

At the MAP display

3 Access the PM level and post the RMM by typing

>MAPCI;MTC;PM;POST RMM rmm_no

and pressing the Enter key.

where

rmm_no
is the number of the RMM from which the card is to be removed

Example of a MAP display:

```
   CM    MS    IOD    Net    PM    CCS    LNS    Trks    Ext    APPL
   .     .      .      .    4SysB   .      .       .      .      .

RMM               SysB     ManB     OffL     CBsy     ISTb      InSv
 0 Quit    PM        4        0       10        3        3       130
 2 Post_   RMM       0        1        1        0        0         2
 3
 4         RMM  5  INSV
 5 Trnsl
 6 Tst
 7 Bsy
 8 RTS
 9 OffL
10 LoadPM
11 Disp_
12 Next
13
14 QueryPM
15
16
17
18
```

4 Busy the RMM by typing

>BSY

and pressing the Enter key.

NT2X57 in an RSC RMM (continued)

Example of a MAP display:

```
   CM    MS    IOD    Net    PM    CCS    LNS    Trks    Ext    APPL
   .     .      .      .    4SysB   .      .       .      .      .

RMM               SysB     ManB     OffL     CBsy     ISTb      InSv
 0 Quit    PM        4        0       10        3        3       130
 2 Post_   RMM       0        1        1        0        0         2
 3
 4         RMM  5  ManB
 5 Trnsl
 6 Tst
 7 Bsy
 8 RTS
 9 OffL
10 LoadPM
11 Disp_
12 Next
13
14 QueryPM
15
16
17
18
```

At the RMM shelf

5

CAUTION
Static discharge may cause damage to circuit packs
Put on a wrist strap and connect it to the frame of the RMM before removing or inserting any cards. This protects the RMM against service degradation caused by static electricity.

Put on a wrist strap.

6

DANGER
Equipment damage
Take these precautions when removing or inserting a card:

1. Do not apply direct pressure to the components.
2. Do not force the cards into the slots.

Remove the NT2X57 card as shown in the following figures.

NT2X57
in an RSC RMM (continued)

a Locate the card to be removed on the appropriate shelf.

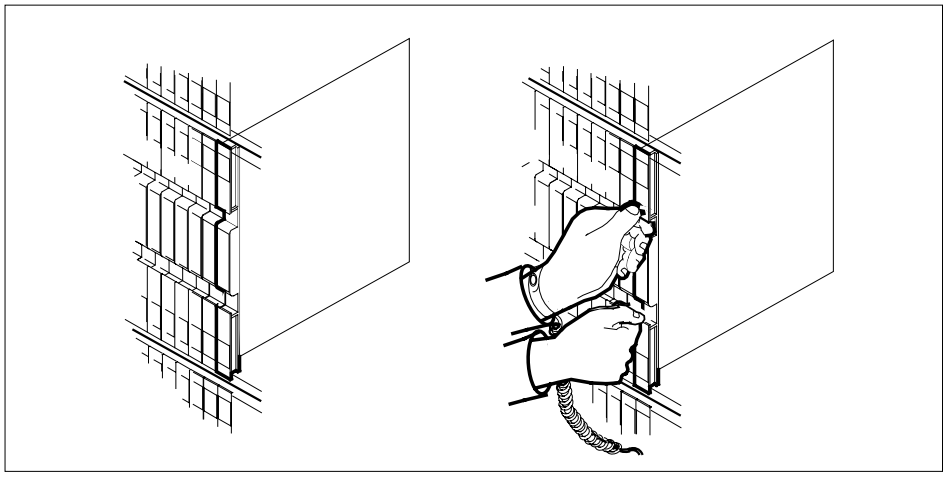

b Open the locking levers on the card to be replaced and gently pull the card towards you until it clears the shelf.

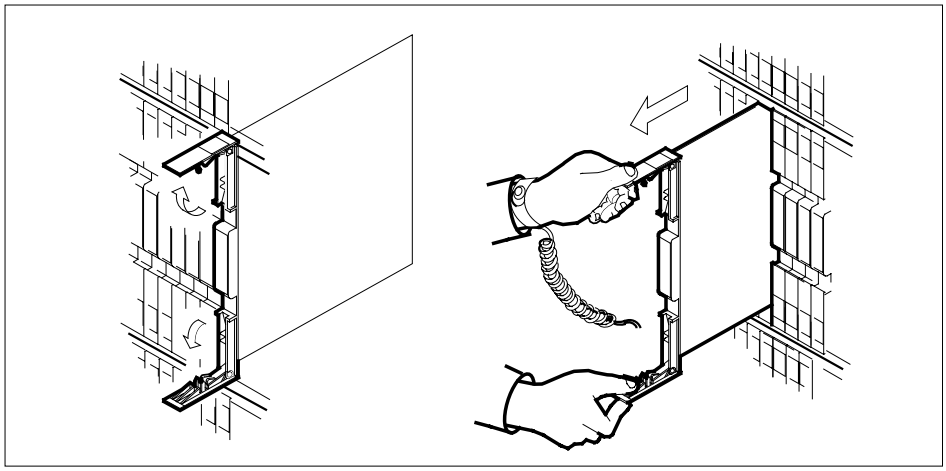

c Ensure the replacement card has the same PEC including suffix, as the card you just removed.

d Set the switch settings on the card to match those of the card you are replacing.

7 Open the locking levers on the replacement card.

Align the card with the slots in the shelf and gently slide the card into the shelf.

NT2X57
in an RSC RMM (continued)

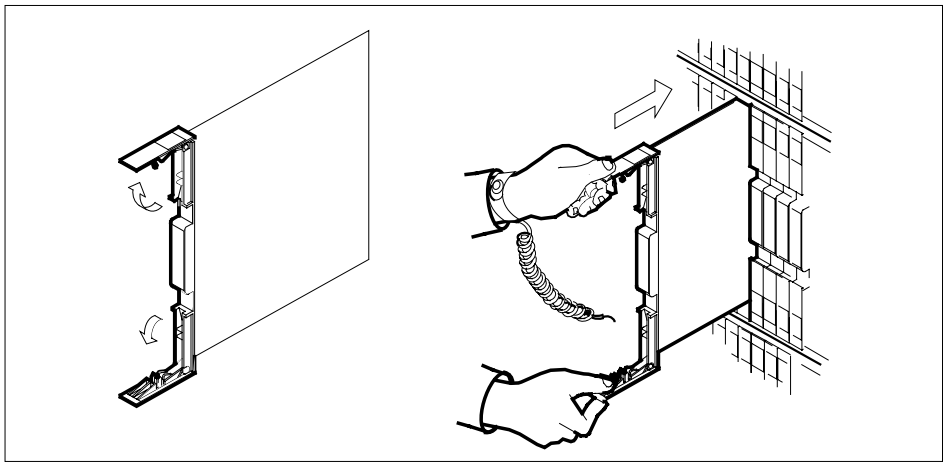

8 Seat and lock the card.

a Using your fingers or thumbs, push on the upper and lower edges of the faceplate to ensure the card is fully seated in the shelf.

b Close the locking levers.

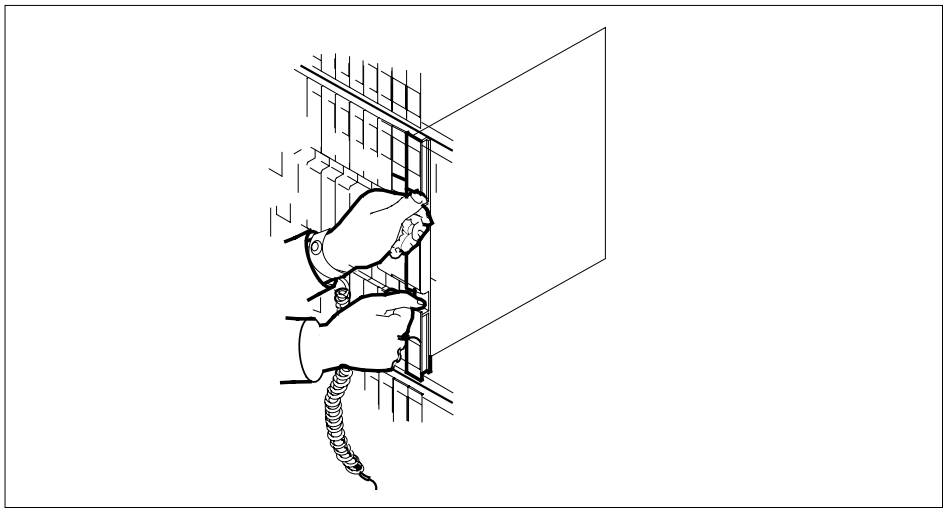

9 Use the following information to determine the next step in this procedure.

If you entered this procedure	Do
from an alarm clearing procedure	step 14
from other	step 10

NT2X57 in an RSC RMM (end)

At the MAP display

10 Return the RMM to service by typing

>RTS

and pressing the Enter key.

If the RTS	Do
passed	step 11
failed	step 15

11 Send any faulty cards for repair according to local procedure.

12 Record the following items in office records:

- date the card was replaced
- serial number of the card
- symptoms that prompted replacement of the card

13 Go to step 16.

14 Return to the *Alarm Clearing Procedure* that directed you to this card replacement procedure. If necessary, go to the point where the faulty card list was produced, identify the next faulty card on the list, and go to the appropriate replacement procedure in this manual for that card.

15 Obtain further assistance in replacing this card by contacting personnel responsible for higher level of support.

16 You have successfully completed this procedure. Return to the maintenance procedure that directed you to this card replacement procedure and continue as directed.

NT2X57 in an RSC-S (DS-1) Model A RMM

Application

Use this procedure to replace an NT2X57 card in an RSC-S RMM.

PEC	Suffixes	Name
NT2X57	AA	Signal Distribution

Common procedures

None

Action

The following flowchart is only a summary of the procedure. To replace the card, use the instructions in the procedure that follows the flowchart.

NT2X57
in an RSC-S (DS-1) Model A RMM (continued)

Summary of card replacement procedure for an NT2X57 card in RSC-S RMM

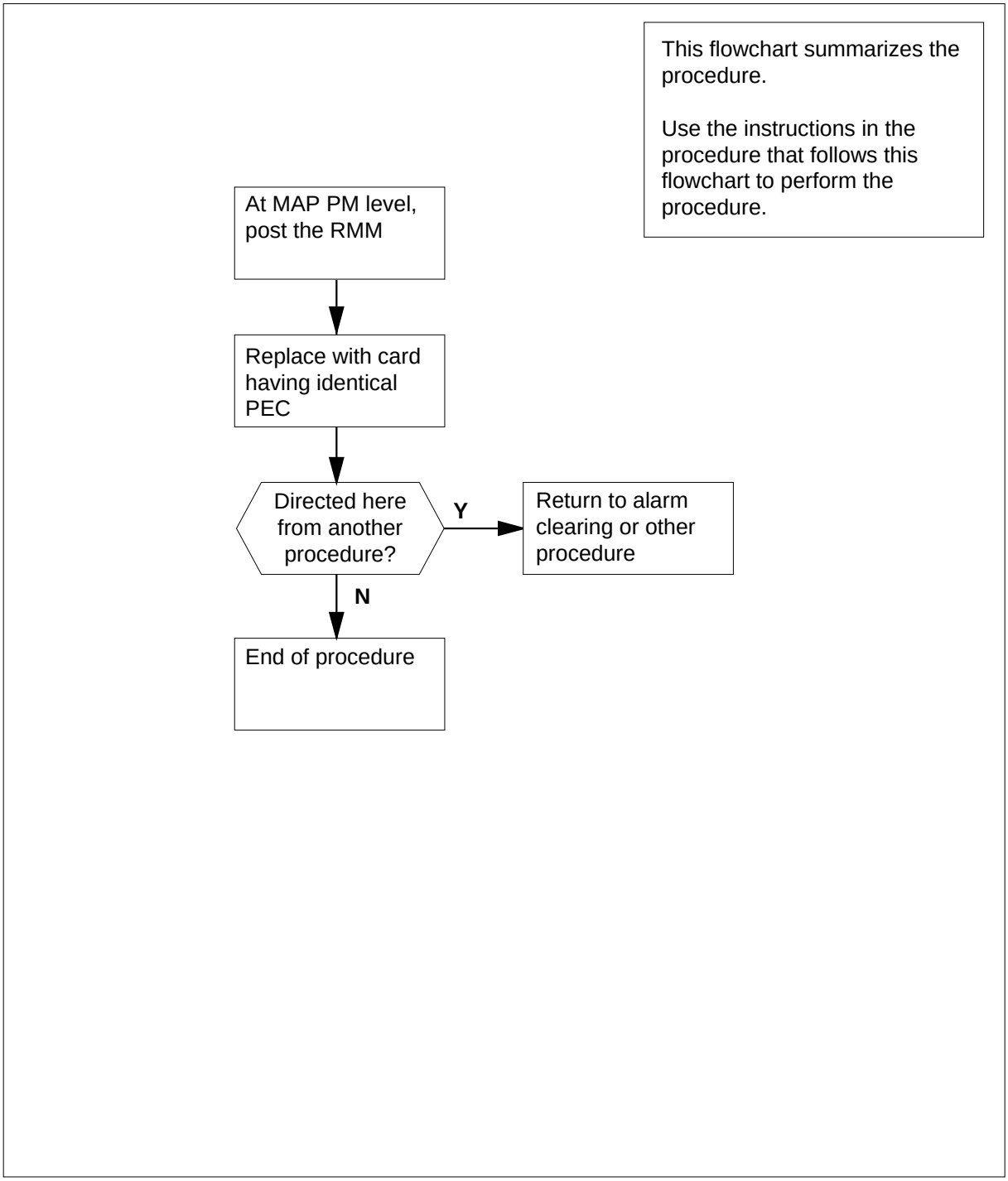

NT2X57 in an RSC-S (DS-1) Model A RMM (continued)

Replacing an NT2X57 card in RSC-S RMM

At your Current Location

1 Proceed only if you have been directed to this card replacement procedure from a step in a maintenance procedure, are using the procedure for verifying or accepting cards, or have been directed to this procedure by your maintenance support group.

2 Obtain an NT2X57 replacement card. Ensure the replacement card has the same product equipment code (PEC), including suffix, as the card that is to be removed.

At the MAP terminal

3 Set the MAP display to PM level and post the RMM by typing

>MAPCI;MTC;PM;POST RMM rmm_no

and pressing the Enter key.

where

rmm_no
is the number of the RMM where the card is to be removed

Example of a MAP display:

```
 CM    MS    IOD    Net    PM    CCS    LNS    Trks    Ext   Appl
 .      .      .      .      .     .      .      .       .      .

RMM            SysB     ManB     OffL     CBsy     ISTb      InSv
 0 Quit   PM      0        0        0        0        0       130
 2 Post_   RM     0        0        0        0        0         0
 3
 4         RMM  5  INSV
 5 Trnsl
 6 Tst
 7 Bsy
 8 RTS
 9 OffL
10 LoadPM
11 Disp_
12 Next
13
14 QueryPM
15
16
17
18
```

4 Busy the RMM by typing

>BSY

and pressing the Enter key.

Example of a MAP display:

```
 CM    MS    IOD    Net    PM    CCS    LNS    Trks    Ext    Appl
 .      .      .     .     1ManB   .      .      .       .      .

RMM              SysB     ManB     OffL     CBsy    ISTb     InSv
 0 Quit    PM       4        0       10        0       0      130
 2 Post_   RMM      0        1        0        0       0        0
 3
 4         RMM  5  ManB
 5 Trnsl
 6 Tst
 7 Bsy
 8 RTS
 9 OffL
10 LoadPM
11 Disp_
12 Next
13
14 QueryPM
15
16
17
18
```

At the RMM shelf

5

CAUTION
Static discharge may cause damage to circuit packs
Put on a wrist strap and connect it to the frame of the RMM before removing any cards. This protects the RMM against service degradation caused by static electricity.

Put on a wrist strap.

6 Remove the NT2X57 card as shown in the following figures.

a Locate the card to be removed on the appropriate shelf.

NT2X57
in an RSC-S (DS-1) Model A RMM (continued)

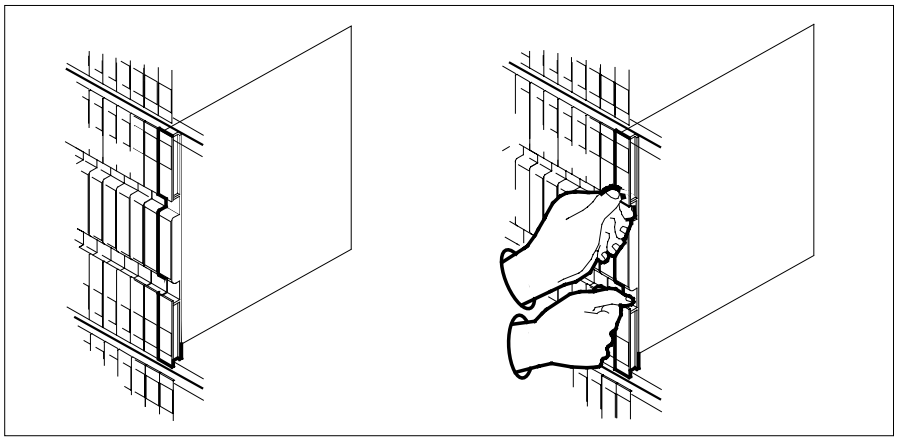

b Open the locking levers on the card to be replaced and gently pull the card toward you until it clears the shelf.

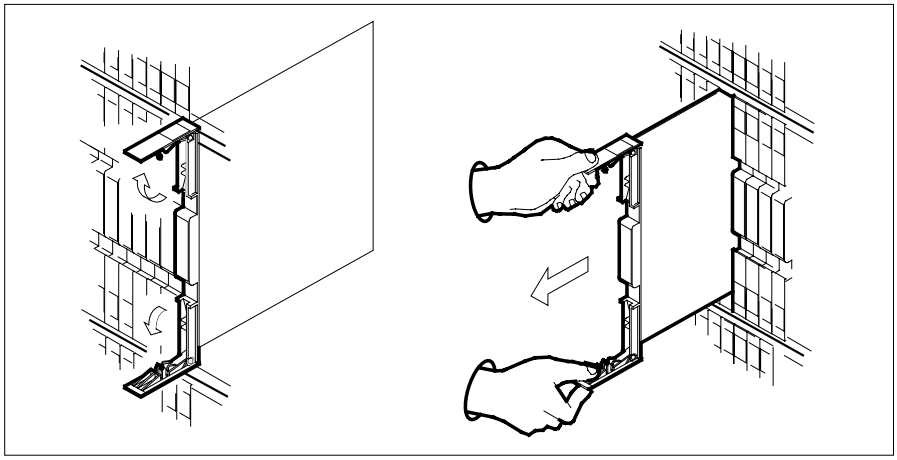

c Ensure the replacement card has the same PEC, including suffix, as the card you just removed.

d Set the switch settings on the card to match those of the card you are replacing.

7 Open the locking levers on the replacement card. Align the card with the slots in the shelf. Gently slide the card into the shelf.

NT2X57
in an RSC-S (DS-1) Model A RMM (continued)

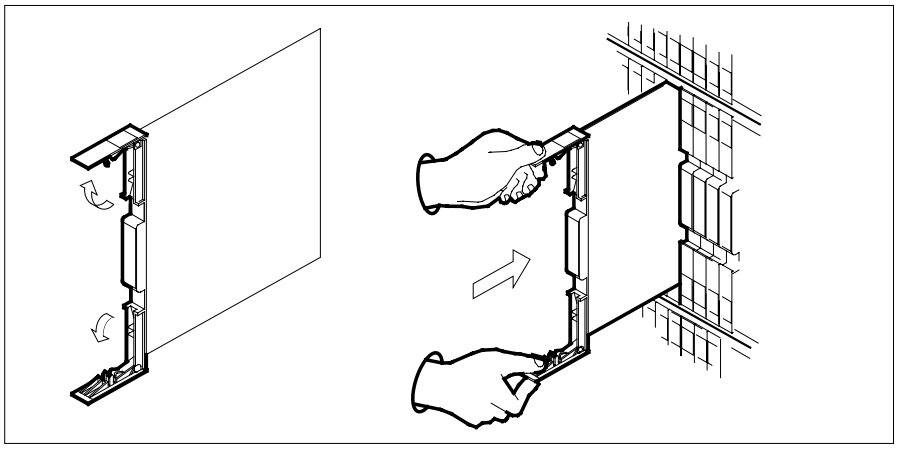

8

DANGER
Equipment damage
Take these precautions when removing or inserting a card:

1. Do not apply direct pressure to the components.
2. Do not force the card into the slot.

Seat and lock the card.

a Using your fingers or thumbs, push on the upper and lower edges of the faceplate to ensure the card is fully seated in the shelf.

b Close the locking levers.

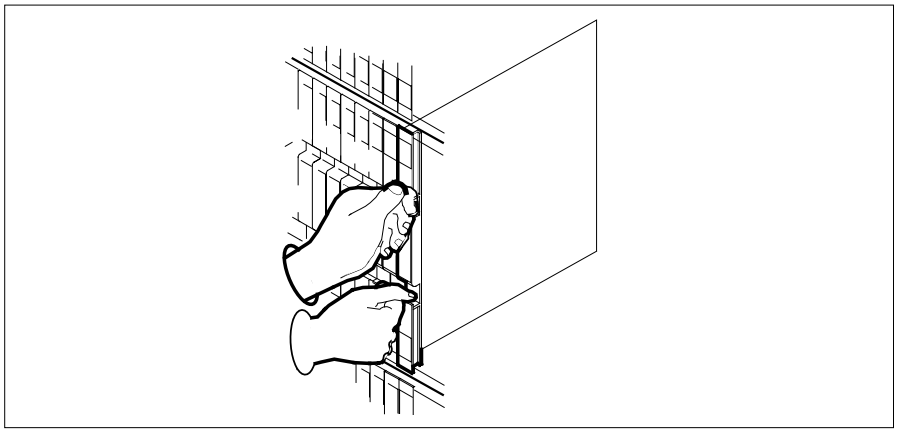

NT2X57 in an RSC-S (DS-1) Model A RMM (end)

9 Use the following information to determine where to proceed.

If you entered this procedure from	Do
alarm clearing procedures	step 14
other	step 10

At the MAP terminal

10 Test the RMM by typing

>TST

and pressing the Enter key.

If TST	Do
passed	step11
failed	step 15

11 Return the RMM to service by typing

>RTS

and pressing the Enter key.

If RTS	Do
passed	step 12
failed	step 15

12 Send any faulty cards for repair according to local procedure.

13 Record the date the card was replaced, the serial number of the card, and the symptoms that prompted replacement of the card. Go to step 16.

14 Return to the procedure that directed you to this procedure. At the point where a faulty card list was produced, identify the next faulty card on the list, and go to the appropriate card replacement procedure for that card in this manual.

15 Obtain further assistance in replacing this card by contacting operating company maintenance personnel.

16 You have successfully completed this procedure. Return to the maintenance procedure that directed you to this card replacement procedure and continue as directed.

NT2X57 in an RSC-S (DS-1) Model B RMM

Application

Use this procedure to replace an NT2X57 card in an RSC-S RMM.

PEC	Suffixes	Name
NT2X57	AA	Signal Distribution

Common procedures

None

Action

The following flowchart is only a summary of the procedure. To replace the card, use the instructions in the procedure that follows the flowchart.

NT2X57
in an RSC-S (DS-1) Model B RMM (continued)

Summary of card replacement procedure for an NT2X57 card in RSC-S RMM

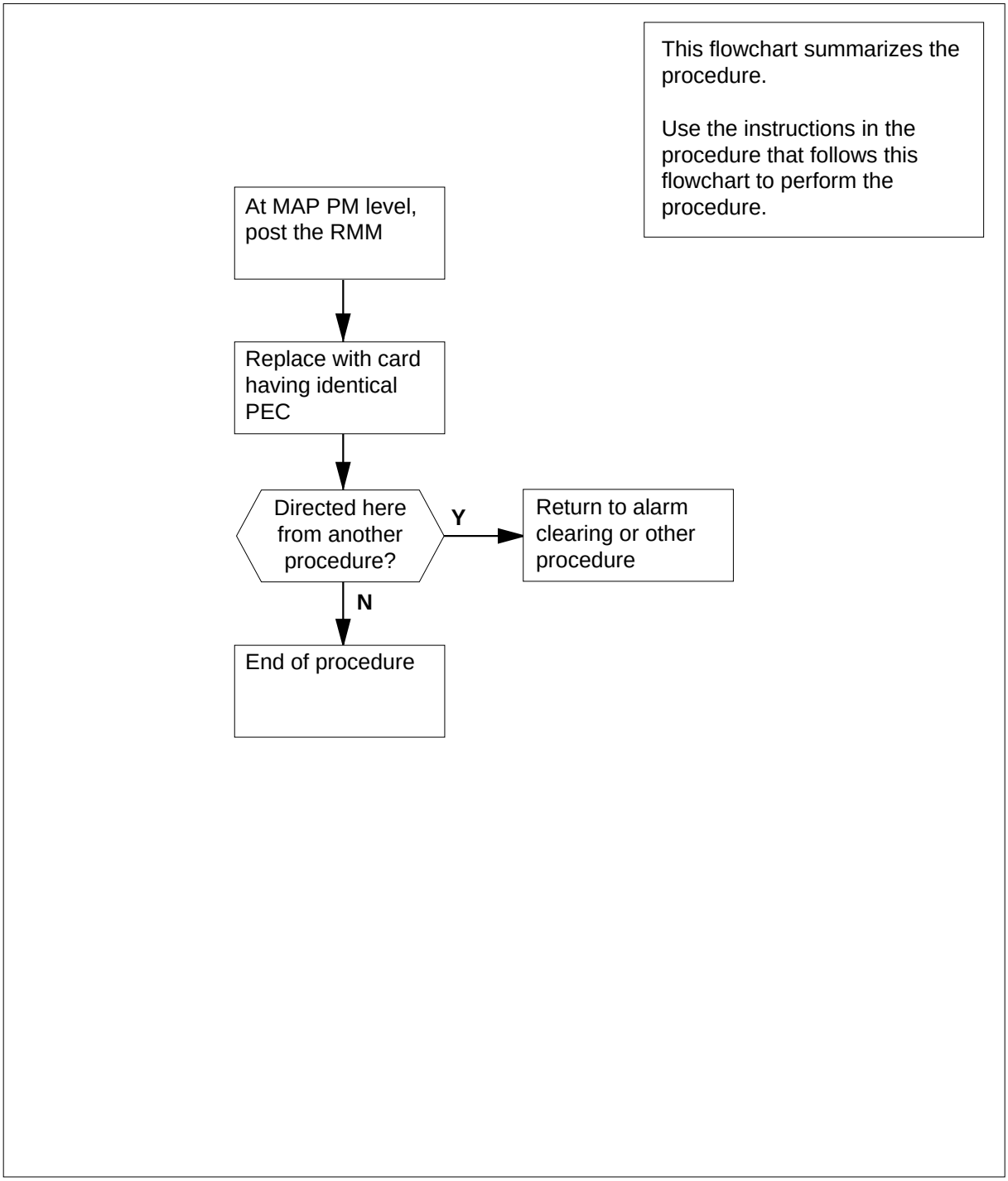

NT2X57 in an RSC-S (DS-1) Model B RMM (continued)

Replacing an NT2X57 card in RSC-S RMM

At Your Current Location

1 Proceed only if you have been directed to this card replacement procedure from a step in a maintenance procedure, are using the procedure for verifying or accepting cards, or have been directed to this procedure by your maintenance support group.

2 Obtain an NT2X57 replacement card. Ensure the replacement card has the same product equipment code (PEC), including suffix, as the card that is to be removed.

At the MAP terminal

3 Set the MAP display to PM level and post the RMM by typing

>MAPCI;MTC;PM;POST RMM rmm_no

and pressing the Enter key.

where

rmm_no
is the number of the RMM where the card is to be removed

Example of a MAP display:

```
 CM    MS    IOD    Net    PM    CCS    LNS    Trks    Ext   Appl
 .     .     .      .      .     .      .      .       .     .

RMM           SysB     ManB     OffL     CBsy     ISTb      InSv
 0 Quit   PM     0        0        0        0        0        130
 2 Post_   RM    0        0        0        0        0          0
 3
 4         RMM  5  INSV
 5 Trnsl
 6 Tst
 7 Bsy
 8 RTS
 9 OffL
10 LoadPM
11 Disp_
12 Next
13
14 QueryPM
15
16
17
18
```

4 Busy the RMM by typing

>BSY

NT2X57 in an RSC-S (DS-1) Model B RMM (continued)

and pressing the Enter key.

Example of a MAP display:

```
 CM    MS    IOD    Net    PM    CCS    LNS    Trks    Ext    Appl
 .      .      .      .     1ManB   .      .      .       .      .

RMM              SysB     ManB     OffL     CBsy    ISTb     InSv
 0 Quit    PM       4        0       10        0       0      130
 2 Post_   RMM      0        1        0        0       0        0
 3
 4         RMM  5  ManB
 5 Trnsl
 6 Tst
 7 Bsy
 8 RTS
 9 OffL
10 LoadPM
11 Disp_
12 Next
13
14 QueryPM
15
16
17
18
```

At the RMM shelf

5

CAUTION
Static discharge may cause damage to circuit packs
Put on a wrist strap and connect it to the frame of the RMM before removing any cards. This protects the RMM against service degradation caused by static electricity.

Put on a wrist strap.

6 Remove the NT2X57 card as shown in the following figures.

a Locate the card to be removed on the appropriate shelf.

NT2X57
in an RSC-S (DS-1) Model B RMM (continued)

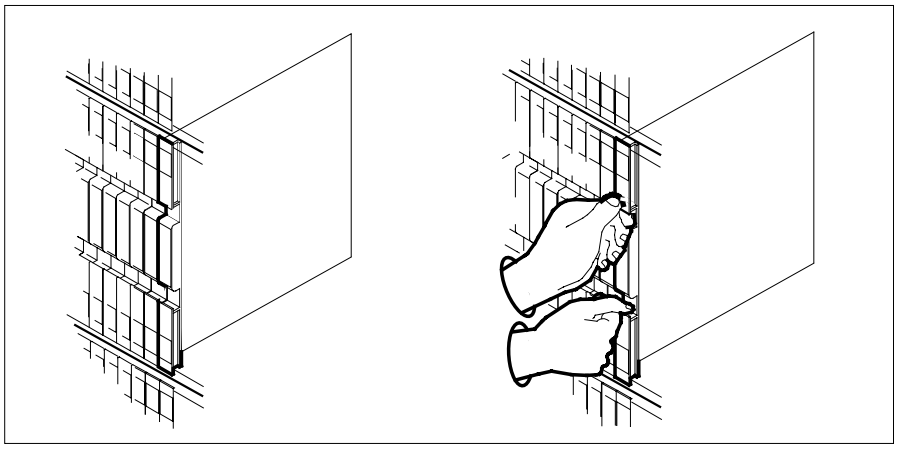

b Open the locking levers on the card to be replaced and gently pull the card toward you until it clears the shelf.

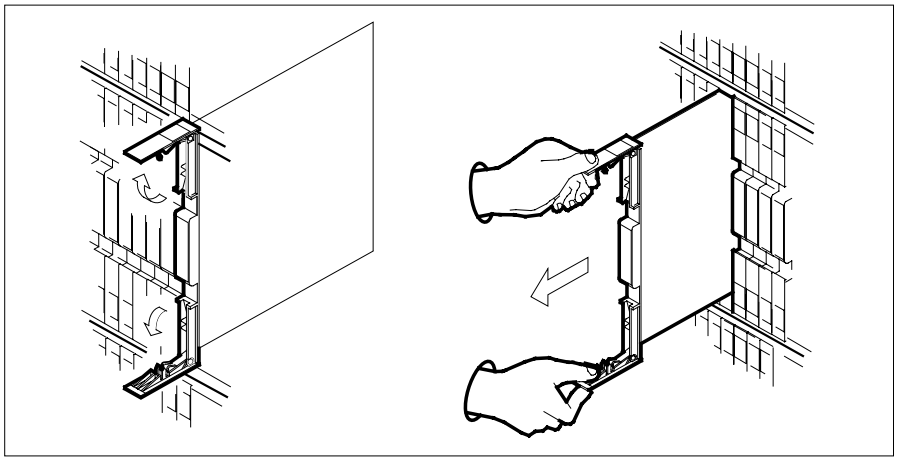

c Ensure the replacement card has the same PEC, including suffix, as the card you just removed.

d Set the switch settings on the card to match those of the card you are replacing.

7 Open the locking levers on the replacement card. Align the card with the slots in the shelf. Gently slide the card into the shelf.

NT2X57
in an RSC-S (DS-1) Model B RMM (continued)

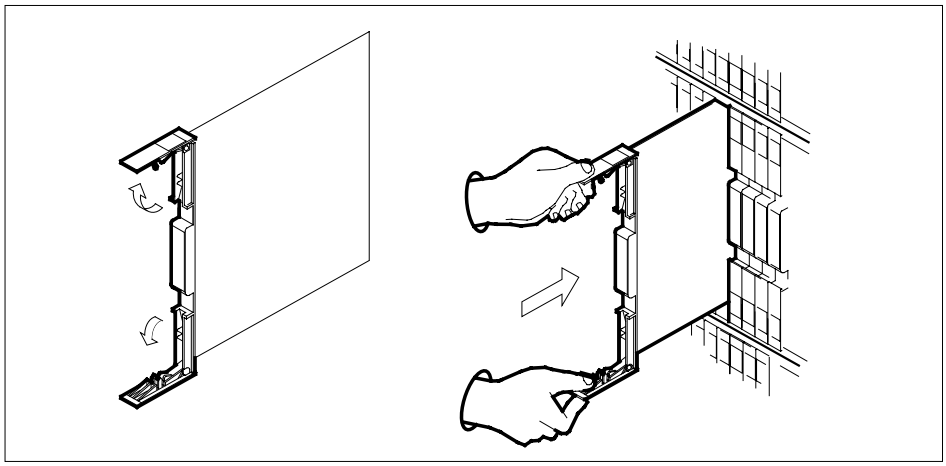

8

DANGER
Equipment damage
Take these precautions when removing or inserting a card:

1. Do not apply direct pressure to the components.
2. Do not force the card into the slot.

Seat and lock the card.

a Using your fingers or thumbs, push on the upper and lower edges of the faceplate to ensure the card is fully seated in the shelf.

b Close the locking levers.

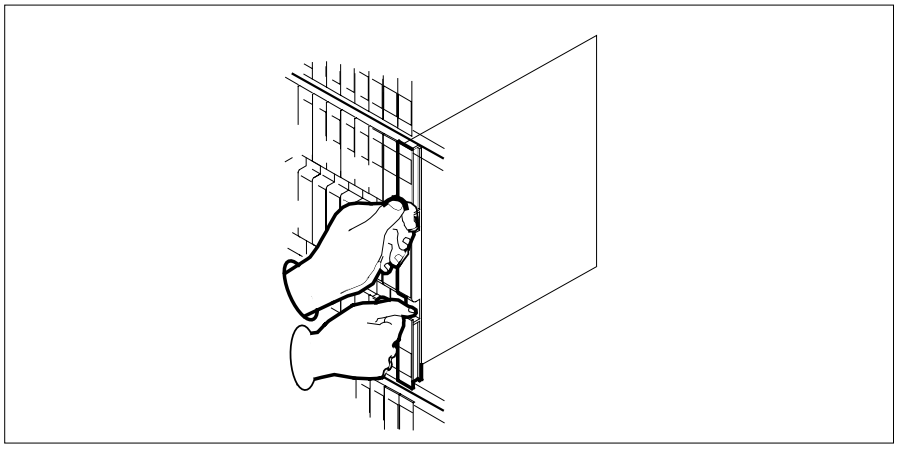

NT2X57 in an RSC-S (DS-1) Model B RMM (end)

9 Use the following information to determine where to proceed.

If you entered this procedure from	Do
alarm clearing procedures	step 14
other	step 10

At the MAP terminal

10 Test the RMM by typing

>TST

and pressing the Enter key.

If TST	Do
passed	step11
failed	step 15

11 Return the RMM to service by typing

>RTS

and pressing the Enter key.

If RTS	Do
passed	step 12
failed	step 15

12 Send any faulty cards for repair according to local procedure.

13 Record the date the card was replaced, the serial number of the card, and the symptoms that prompted replacement of the card. Go to step 16.

14 Return to the procedure that directed you to this procedure. At the point where a faulty card list was produced, identify the next faulty card on the list, and go to the appropriate card replacement procedure for that card in this manual.

15 Obtain further assistance in replacing this card by contacting operating company maintenance personnel.

16 You have successfully completed this procedure. Return to the maintenance procedure that directed you to this card replacement procedure and continue as directed.

NT2X57 in an RSC-S (PCM-30) Model A RMM

Application

Use this procedure to replace an NT2X57 card in an RSC-S RMM.

PEC	Suffixes	Name
NT2X57	AA	Signal Distribution

Common procedures

None

Action

The following flowchart is only a summary of the procedure. To replace the card, use the instructions in the procedure that follows the flowchart.

NT2X57
in an RSC-S (PCM-30) Model A RMM (continued)

Summary of card replacement procedure for an NT2X57 card in RSC-S RMM

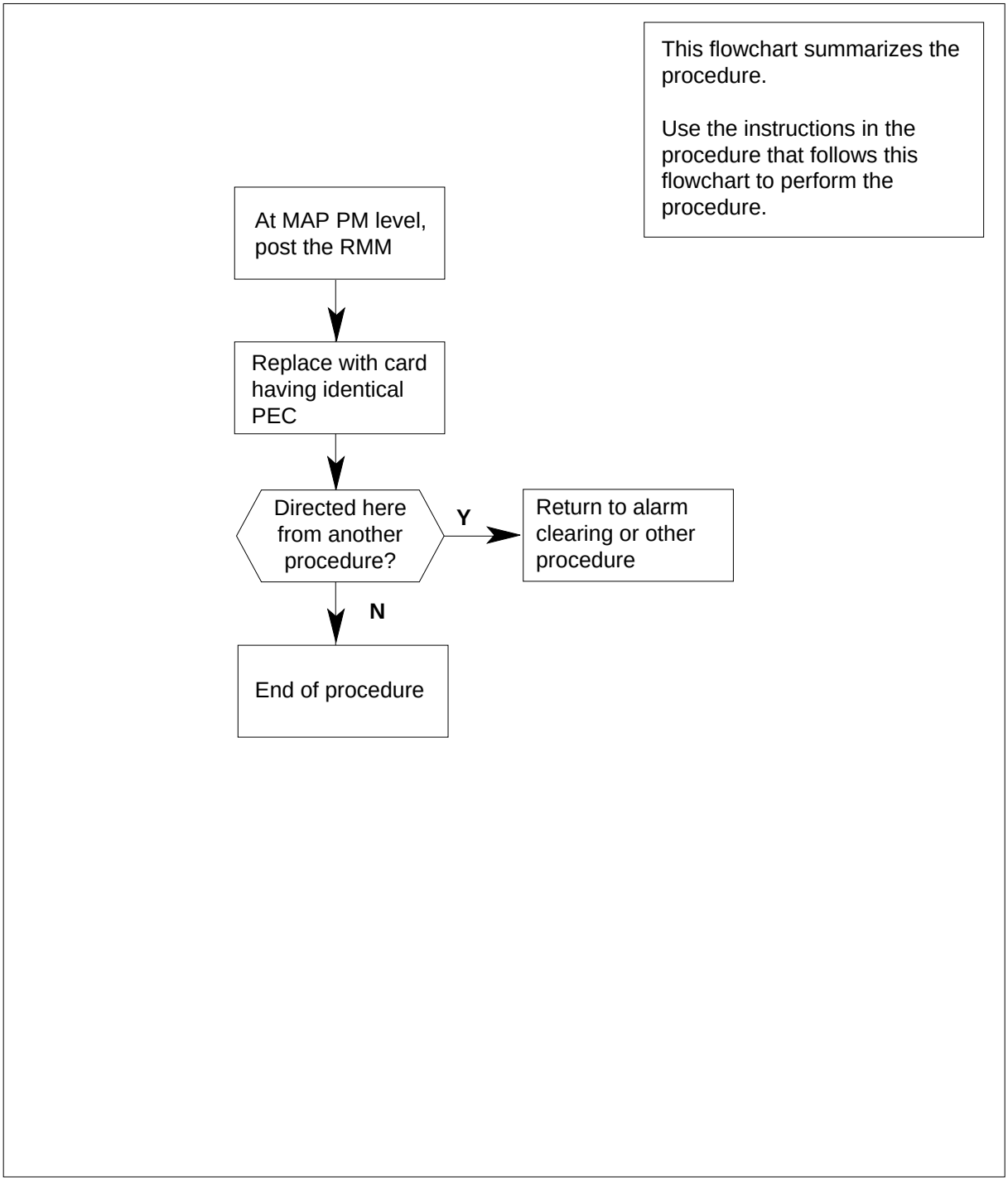

NT2X57
in an RSC-S (PCM-30) Model A RMM (continued)

Replacing an NT2X57 card in RSC-S RMM

At your Current Location

1 Proceed only if you have been directed to this card replacement procedure from a step in a maintenance procedure, are using the procedure for verifying or accepting cards, or have been directed to this procedure by your maintenance support group.

2 Obtain an NT2X57 replacement card. Ensure the replacement card has the same product equipment code (PEC), including suffix, as the card that is to be removed.

At the MAP terminal

3 Set the MAP display to PM level and post the RMM by typing

>MAPCI;MTC;PM;POST RMM rmm_no

and pressing the Enter key.

where

rmm_no
is the number of the RMM where the card is to be removed

Example of a MAP display:

```
 CM    MS    IOD    Net    PM    CCS    LNS    Trks    Ext   Appl
 .      .      .      .      .     .      .      .       .      .
RMM            SysB     ManB     OffL     CBsy     ISTb      InSv
 0 Quit   PM      0        0        0        0        0       130
 2 Post_   RM     0        0        0        0        0         0
 3
 4         RMM  5  INSV
 5 Trnsl
 6 Tst
 7 Bsy
 8 RTS
 9 OffL
10 LoadPM
11 Disp_
12 Next
13
14 QueryPM
15
16
17
18
```

4 Busy the RMM by typing

>BSY

and pressing the Enter key.

Example of a MAP display:

```
 CM    MS    IOD    Net    PM    CCS    LNS    Trks    Ext    Appl
 .      .      .      .     1ManB   .      .      .       .      .
RMM             SysB     ManB     OffL     CBsy    ISTb     InSv
 0 Quit    PM       4        0       10        0       0      130
 2 Post_   RMM      0        1        0        0       0        0
 3
 4         RMM  5  ManB
 5 Trnsl
 6 Tst
 7 Bsy
 8 RTS
 9 OffL
10 LoadPM
11 Disp_
12 Next
13
14 QueryPM
15
16
17
18
```

At the RMM shelf

5

CAUTION
Static discharge may cause damage to circuit packs
Put on a wrist strap and connect it to the frame of the RMM before removing any cards. This protects the RMM against service degradation caused by static electricity.

Put on a wrist strap.

6 Remove the NT2X57 card as shown in the following figures.

a Locate the card to be removed on the appropriate shelf.

NT2X57
in an RSC-S (PCM-30) Model A RMM (continued)

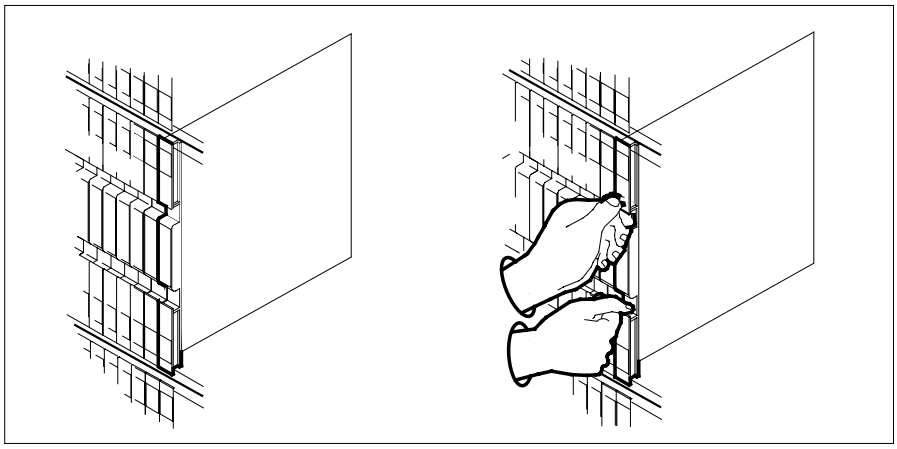

b Open the locking levers on the card to be replaced and gently pull the card toward you until it clears the shelf.

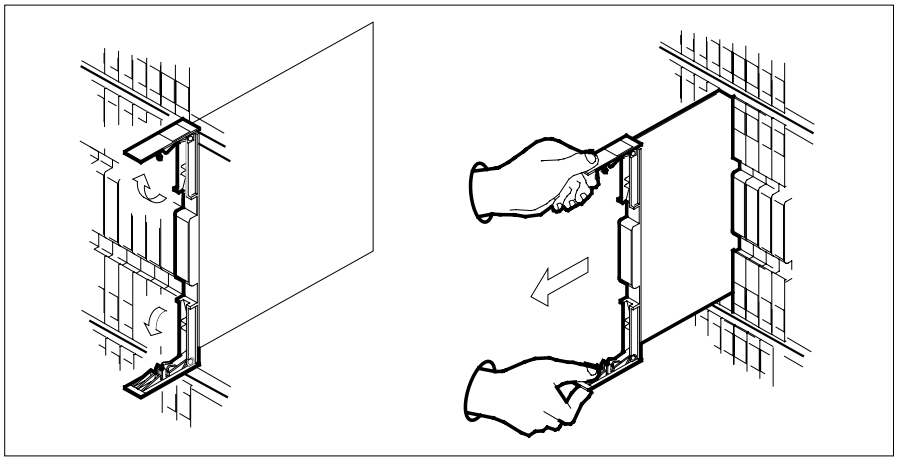

c Ensure the replacement card has the same PEC, including suffix, as the card you just removed.

d Set the switch settings on the card to match those of the card you are replacing.

7 Open the locking levers on the replacement card. Align the card with the slots in the shelf. Gently slide the card into the shelf.

NT2X57
in an RSC-S (PCM-30) Model A RMM (continued)

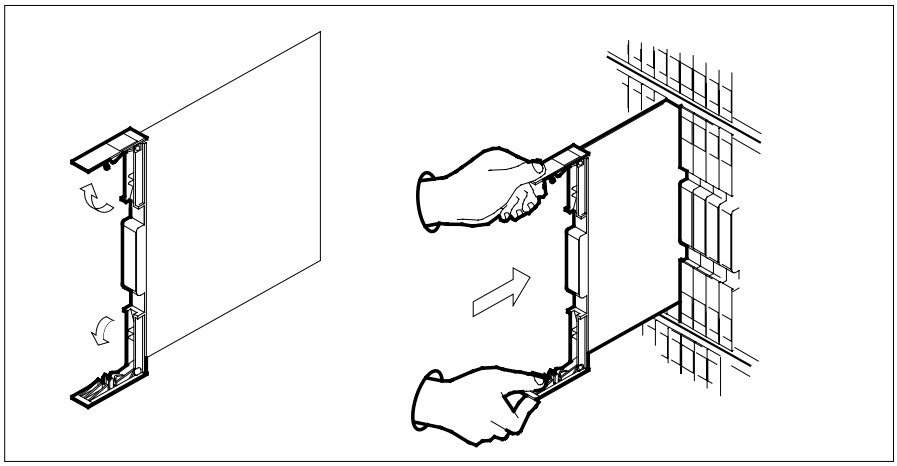

8

DANGER
Equipment damage
Take these precautions when removing or inserting a card:

1. Do not apply direct pressure to the components.
2. Do not force the card into the slot.

Seat and lock the card.

a Using your fingers or thumbs, push on the upper and lower edges of the faceplate to ensure the card is fully seated in the shelf.

b Close the locking levers.

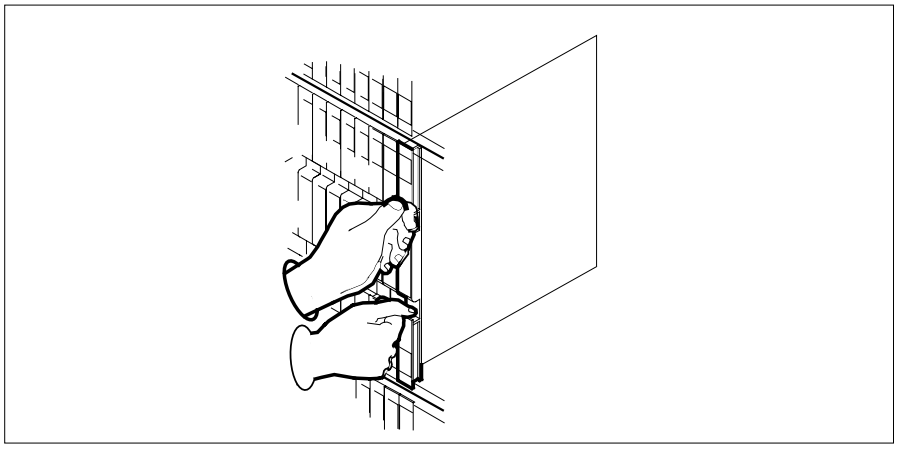

NT2X57 in an RSC-S (PCM-30) Model A RMM (end)

9 Use the following information to determine where to proceed.

If you entered this procedure from	Do
alarm clearing procedures	step 14
other	step 10

At the MAP terminal

10 Test the RMM by typing

>TST

and pressing the Enter key.

If TST	Do
passed	step11
failed	step 15

11 Return the RMM to service by typing

>RTS

and pressing the Enter key.

If RTS	Do
passed	step 12
failed	step 15

12 Send any faulty cards for repair according to local procedure.

13 Record the date the card was replaced, the serial number of the card, and the symptoms that prompted replacement of the card. Go to step 16.

14 Return to the procedure that directed you to this procedure. At the point where a faulty card list was produced, identify the next faulty card on the list, and go to the appropriate card replacement procedure for that card in this manual.

15 Obtain further assistance in replacing this card by contacting operating company maintenance personnel.

16 You have successfully completed this procedure. Return to the maintenance procedure that directed you to this card replacement procedure and continue as directed.

NT2X59 in an IOPAC RMM

Application

Use this procedure to replace the following card in a remote maintenance module (RMM).

PEC	Suffix	Name
NT2X59	AA	Group CODEC and Tone cCard

Common procedures

The common replacing a card procedure is referenced in this procedure.

Action

The following flowchart is a summary of the procedure. To replace the card, use the instructions in the step-action procedure that follows the flowchart.

NT2X59 in an IOPAC RMM (continued)

Summary of card replacement procedure for an NT2X59 card in an RMM

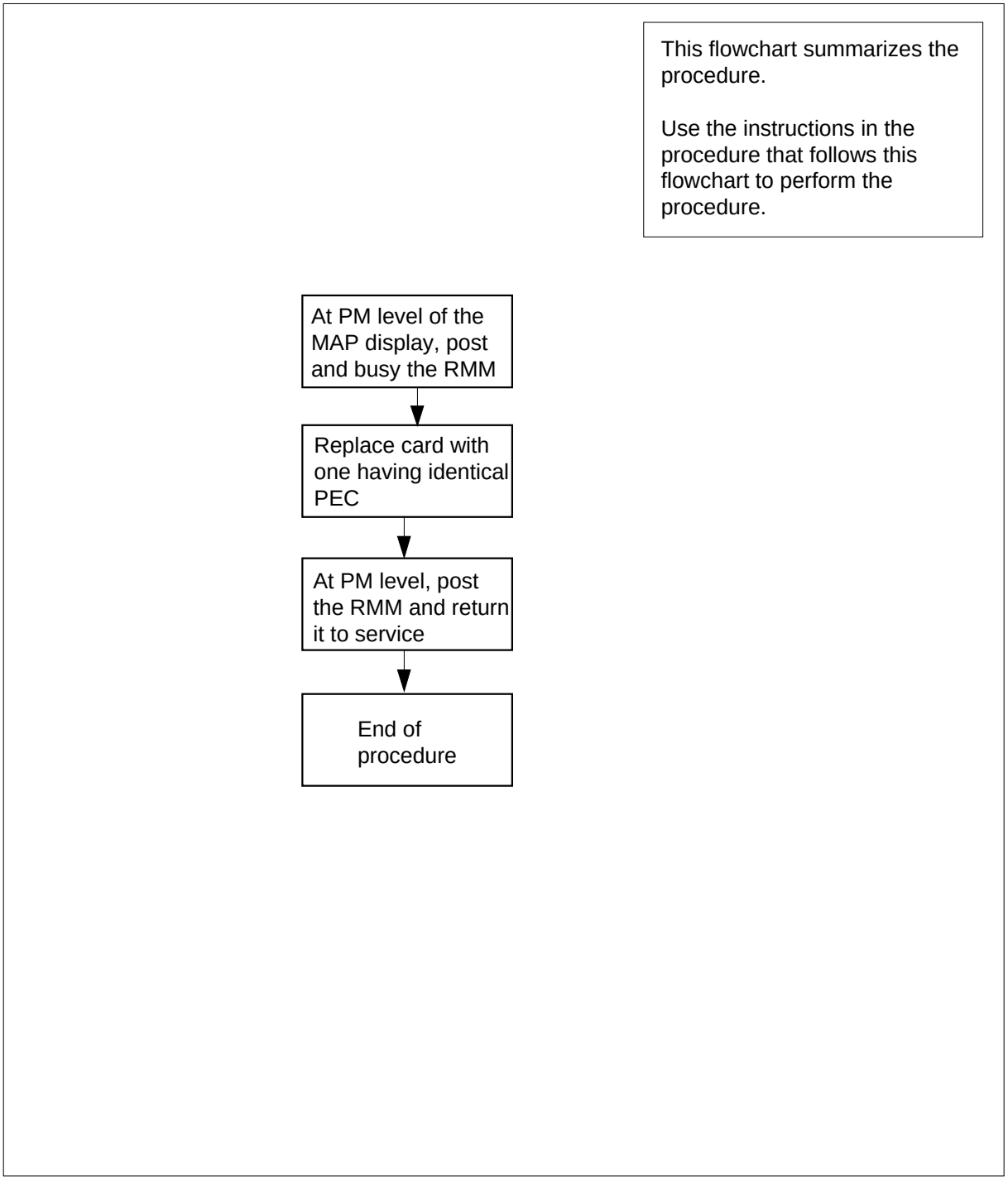

NT2X59 in an IOPAC RMM (continued)

Replacing an NT2X59 in an RMM

At the MAP terminal

1 Get a replacement card. Ensure the replacement card has the same product equipment code (PEC), including suffix, as the card to be removed.

2 Go to the peripheral module (PM) level of the MAP display and post the RMM by typing

>PM;POST RMM rmm_no

and pressing the Enter key.

where

rmm_no
is the number of the RMM shelf where the card is to be replaced

Example of a MAP response

```
          SysB      ManB      Offl      CBsy      ISTb      InSv
PM           0         2         2         0         7        21
RMM          1         0         1         0         0         6

RMM      0    SysB
```

3 Busy the RMM by typing

>BSY

and pressing the Enter key.

At the RMM

4

WARNING
Static electricity damage
Wear a wrist strap connected to the wrist strap grounding point at the top of each equipment rack, (Bay 0, 1, 2, and 3), while handling circuit cards. This protects the cards against damage caused by static electricity.

Replace the NT2X59 card using the common replacing a card procedure in this document. When you have completed the procedure, return here.

NT2X59 in an IOPAC RMM (end)

At the MAP terminal

5 Return the RMM to service by typing

>RTS

and pressing the Enter key.

If RTS	Do
passed	step 6
failed	step 8

6 Send any faulty cards for repair according to local procedure.

7 Record the following items in office records:

- date the card was replaced
- serial number of the card
- symptoms that prompted replacement of the card

Go to step 9.

8 Get more assistance in replacing this card by contacting the personnel responsible for higher level of support.

9 You have completed this procedure.

NT2X59 in an OPM RMM

Application

Use this procedure to replace the following card in an RMM.

PEC	Suffixes	Name
NT2X59	AA	Group CODEC Card

Common procedures

None

Action

The following flowchart is a summary of the procedure. To replace the card, use the instructions in the procedure that follows the flowchart.

NT2X59
in an OPM RMM (continued)

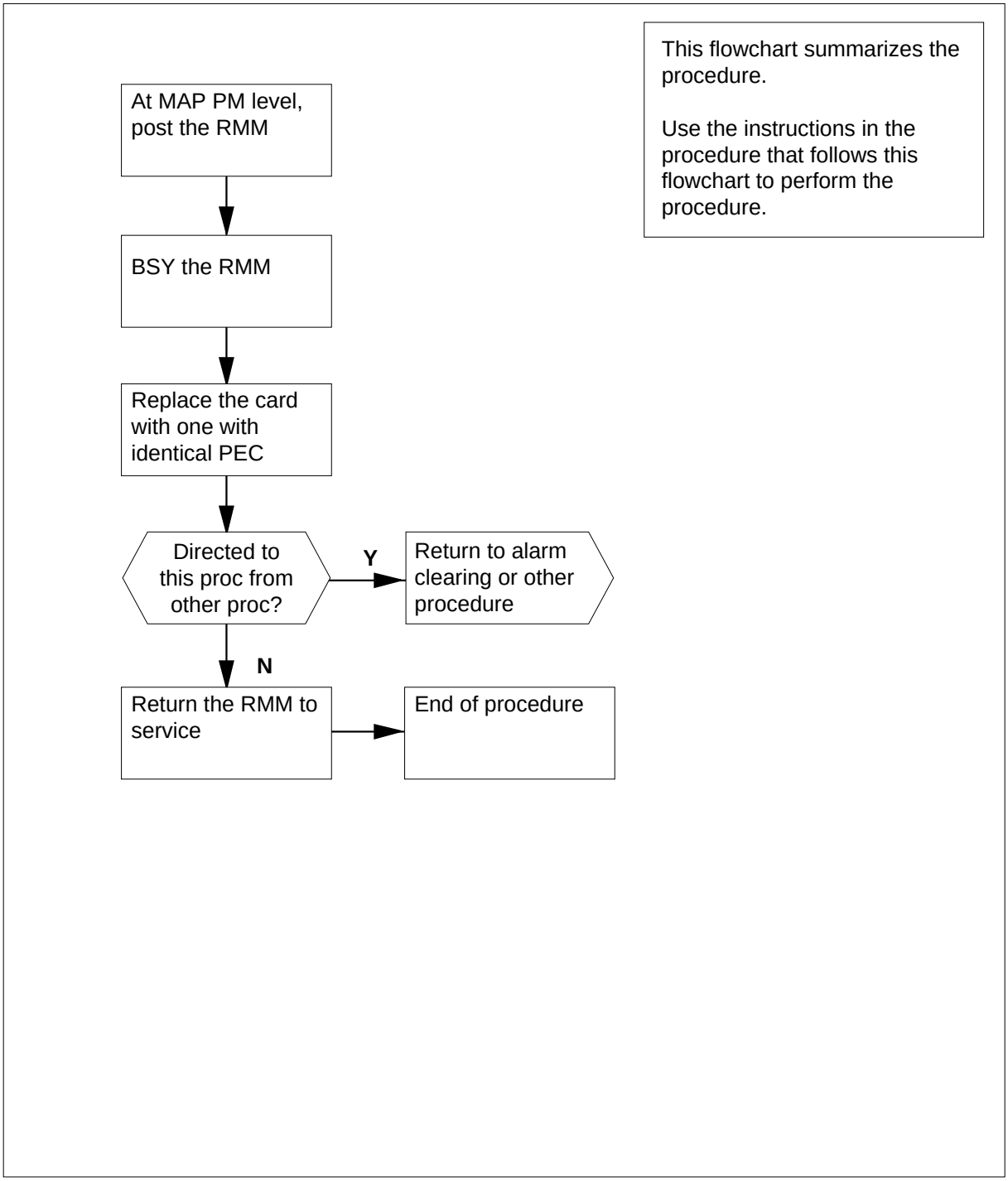

Replacing an NT2X59 card in an RMM

At your current location

1 Proceed only if you were either directed to this card replacement procedure from a step in a maintenance procedure, are using the procedure to verify or accept cards, or were directed to this procedure by your maintenance support group.

2 Obtain a replacement card. Ensure that the replacement card has the same product equipment code (PEC) including suffix, as the card to be removed.

At the MAP display

3 Access the PM level and post the RMM by typing

>MAPCI;MTC;PM;POST RMM rmm_no

and pressing the Enter key.

where

rmm_no
is the number of the RMM where the card is to be replaced

Example of a MAP display:

```
   CM    MS    IOD    Net    PM    CCS    LNS    Trks    Ext    APPL
   .     .      .      .    4SysB   .      .       .      .      .

RMM               SysB     ManB     OffL     CBsy     ISTb      InSv
 0 Quit    PM        4        0       10        3        3       130
 2 Post_   RMM       1        0        0        0        0        15
 3
 4         RMM  5  SysB
 5 Trnsl
 6 Tst
 7 Bsy
 8 RTS
 9 OffL
10 LoadPM
11 Disp_
12 Next
13
14 QueryPM
15
16
17
18
```

4 Busy the RMM by typing

>BSY

and pressing the Enter key.

NT2X59
in an OPM RMM (continued)

Example of a MAP display:

```
   CM    MS    IOD    Net    PM    CCS    LNS    Trks    Ext    APPL
   .     .      .      .    3SysB   .      .       .      .      .

RMM              SysB     ManB     OffL     CBsy     ISTb      InSv
 0 Quit    PM       3        0       10        3        3       130
 2 Post_   RMM      0        1        0        0        0        15
 3
 4         RMM  5  ManB
 5 Trnsl
 6 Tst
 7 Bsy
 8 RTS
 9 OffL
10 LoadPM
11 Disp_
12 Next
13
14 QueryPM
15
16
17
18
```

At the RMM shelf

5

CAUTION
Static discharge may cause damage to circuit packs
Put on a wrist strap and connect it to the frame of the RMM before removing or inserting any cards. This protects the RMM against service degradation caused by static electricity.

Put on a wrist strap.

6

DANGER
Equipment damage
Take these precautions when removing or inserting a card
1. Do not apply direct pressure to the components.
2. Do not force the cards into the slots.

Remove the NT2X59 card as shown in the following figures.

NT2X59
in an OPM RMM (continued)

a Locate the card to be removed on the appropriate shelf.

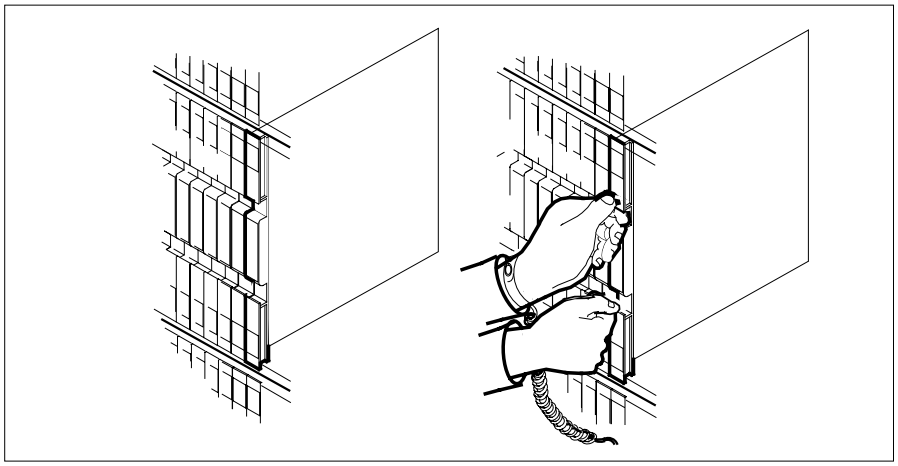

b Open the locking levers on the card to be replaced and gently pull the card towards you until it clears the shelf.

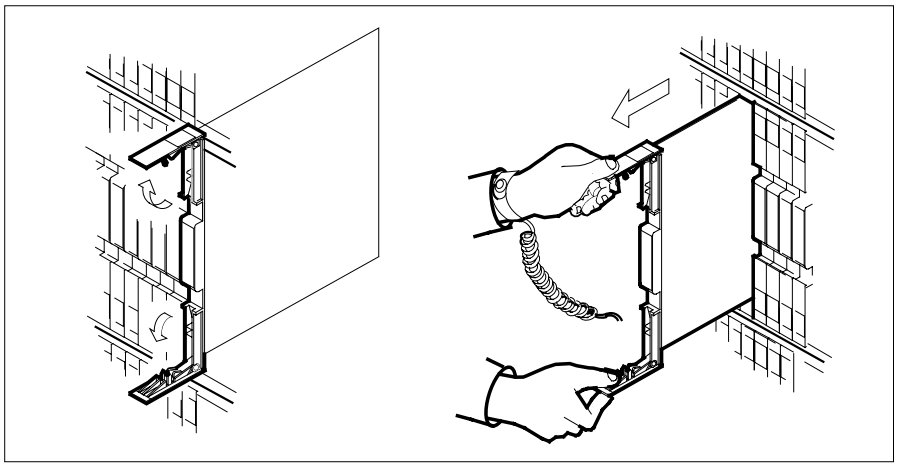

c Ensure that the replacement card has the same PEC including suffix, as the card you just removed.

7 Open the locking levers on the replacement card.

Align the card with the slots in the shelf and gently slide the card into the shelf.

NT2X59
in an OPM RMM (continued)

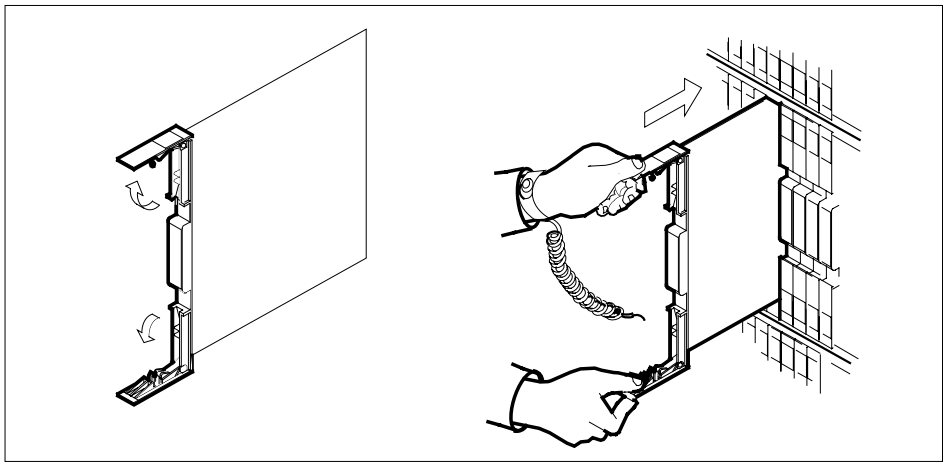

8 Seat and lock the card.

a Using your fingers or thumbs, push on the upper and lower edges of the faceplate to ensure that the card is fully seated in the shelf.

b Close the locking levers.

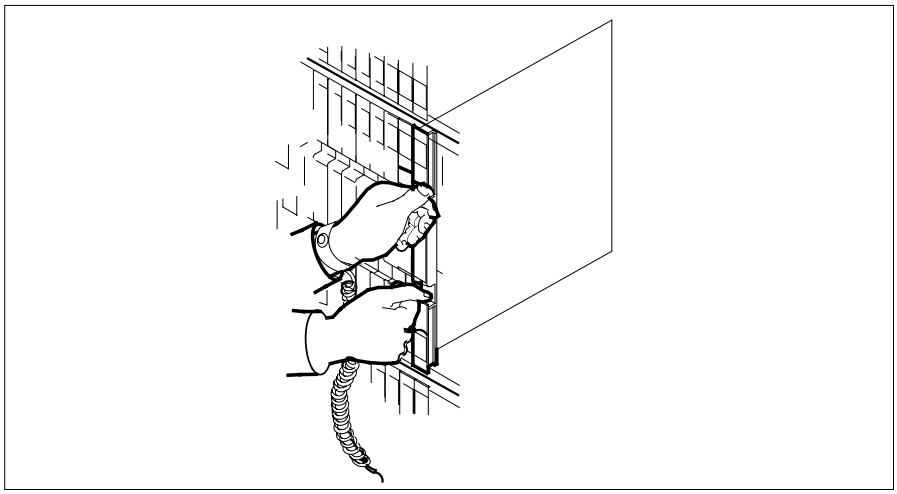

9 Use the following information to determine the next step in this procedure.

If you entered this procedure	Do
from an alarm clearing procedure	step 16
from other	step 10

NT2X59 in an OPM RMM (end)

At the MAP display

10 Load the RMM by typing

>LOADPM

and pressing the Enter key.

11 Test the RMM by typing

>TST

and pressing the Enter key.

Example of a MAP response:

```
Test Passed
    or
Test Failed
```

If TST	Do
passed	step 12
failed	step 16

12 Return the RMM to service by typing

>RTS

and pressing the Enter key.

If RTS	Do
passed	step 13
failed	step 17

13 Send any faulty cards for repair according to local procedure.

14 Record the following items in office records:

- date the card was replaced
- serial number of the card
- symptoms that prompted replacement of the card

15 Go to step 18.

16 Return to the *Alarm Clearing Procedure* that directed you to this card replacement procedure. If necessary, go to the point where the faulty card list was produced, identify the next faulty card on the list, and go to the appropriate replacement procedure in this manual for that card.

17 Obtain further assistance in replacing this card by contacting personnel responsible for higher level of support.

18 You have successfully completed this procedure. Return to the maintenance procedure that directed you to this card replacement procedure and continue as directed.

NT2X59 in an RLCM-EDC RMM

Application

Use this procedure to replace a card in the shelves or frames identified in the following table.

PEC	Suffixes	Cardname	Shelf/frame name
NT2X59	AA	Group CODEC Card	RMM/RLCC

If you cannot identify the PEC, suffix, and shelf or frame for the card you want to replace, refer to the Index. The maintenance manual index contains a list of cards, shelves, and frames.

Common procedures

There are no common procedures.

Action

This procedure contains a summary flowchart and a list of steps. Use the flowchart to review the procedure. Follow the steps to perform the procedure.

NT2X59
in an RLCM-EDC RMM (continued)

Summary of replacing an NT2X59 card in RMM

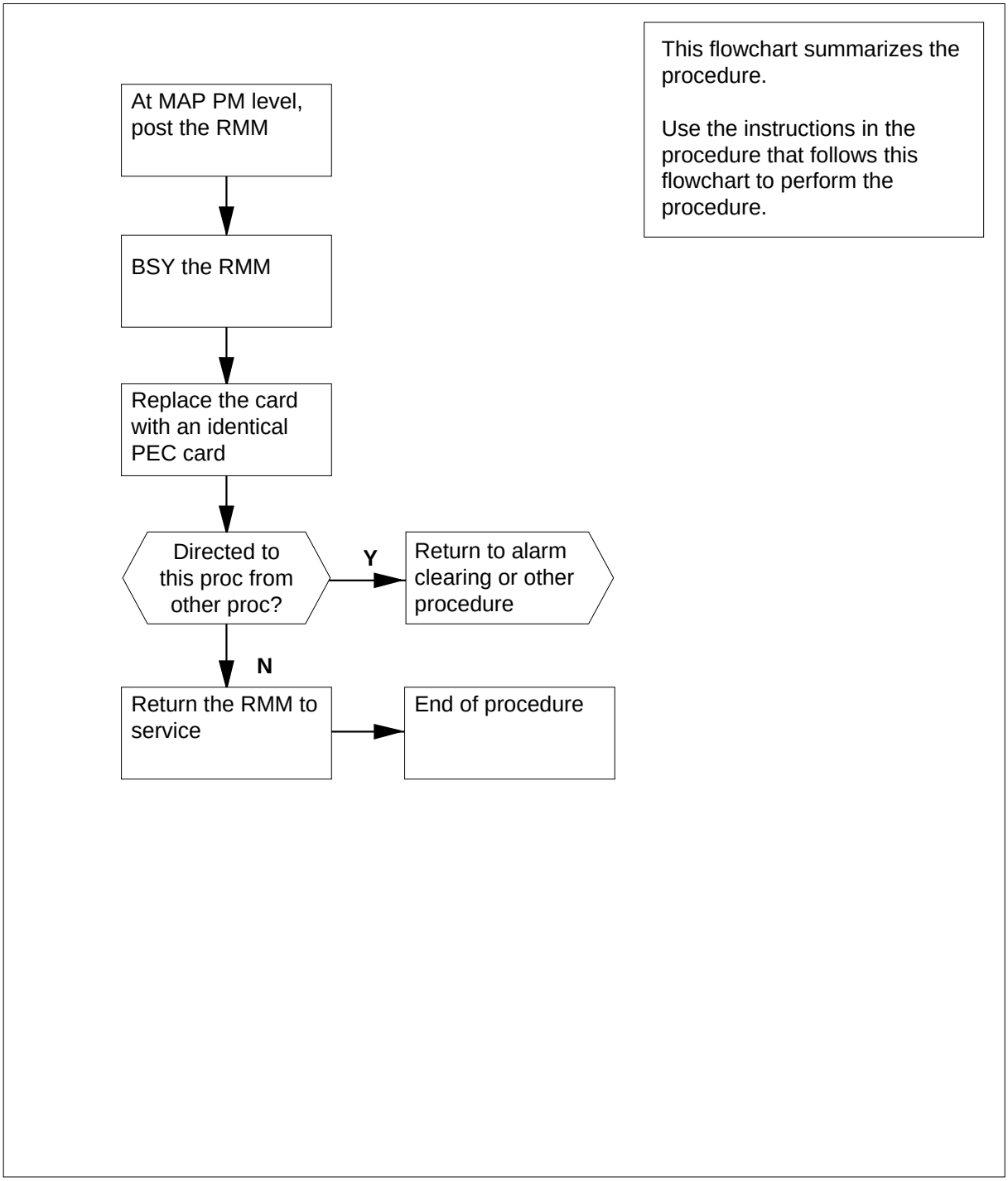

NT2X59 in an RLCM-EDC RMM (continued)

Replacing an NT2X59 card in RMM

At your current location

1 Proceed if:

- a step in a maintenance procedure directs you to this card replacement procedure
- you use the procedure to verify or accept cards
- your maintenance support group directs you to this procedure.

2 Obtain a replacement card. Make sure that the replacement card has the same product equipment code (PEC) and PEC suffix, as the removed card.

At the MAP display

3 To access the PM level and post the RMM, type

>MAPCI;MTC;PM;POST RMM rmm_no

and press the Enter key.

where

rmm_no
is the number of the RMM, the location the card to remove

Example of a MAP display:

```
RMM  5  SysB
```

4 To busy the RMM, type

>BSY

and press the Enter key.

Example of a MAP display:

```
RMM  5  ManB
```

NT2X59
in an RLCM-EDC RMM (continued)

At the RMM shelf

5

WARNING
Static discharge can cause damage to circuit packs
Wear a wrist strap and connect the wrist strap to the frame of the RMM. Connect the wrist strap before you remove or insert any cards. The wrist strap protects the RMM against static electricity service degradation.

Wear a wrist strap.

6

DANGER
Equipment damage
Take these precautions when you remove or insert a card:

1. Do not apply direct pressure to the components.
2. Do not force the cards into the slots.

Remove the NT2X59 card as described in the following figures.

a Locate the card you want to remove on the appropriate shelf.

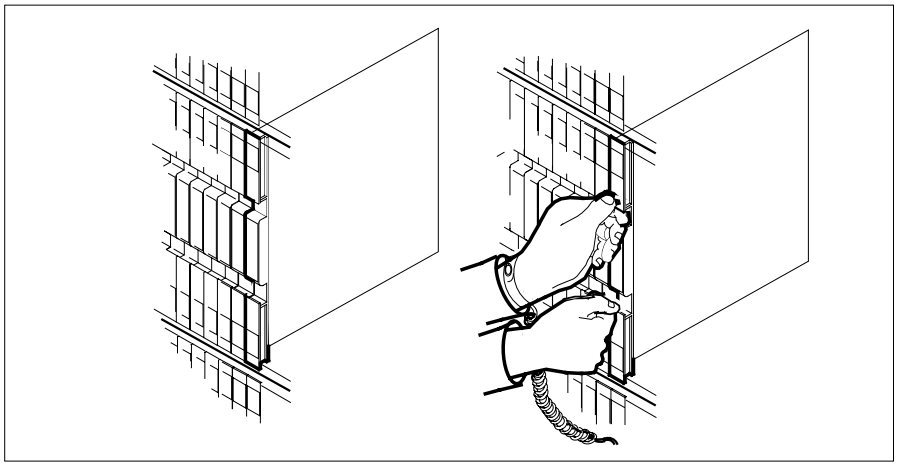

b Open the locking levers on the card you want to replace. Carefully pull the card toward you until the card clears the shelf.

NT2X59
in an RLCM-EDC RMM (continued)

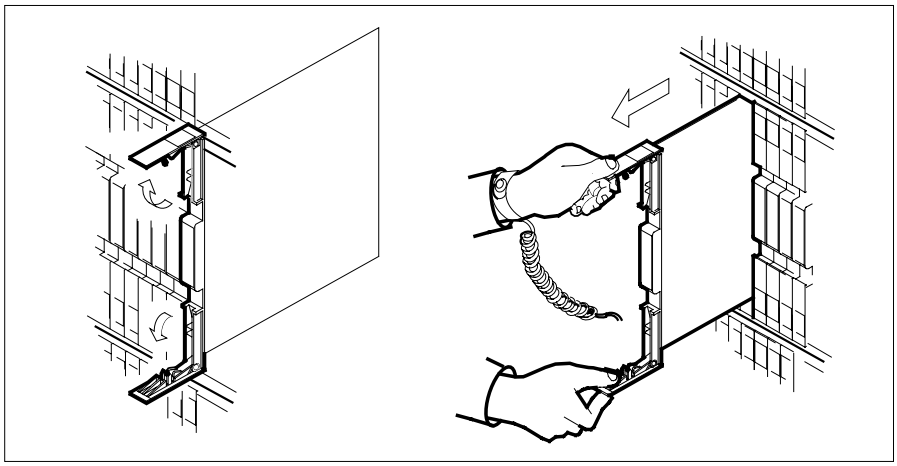

c Make sure the replacement card has the same PEC, and PEC suffix, as the removed card.

7 Open the locking levers on the replacement card.

Align the card with the slots in the shelf. Carefully slide the card into the shelf.

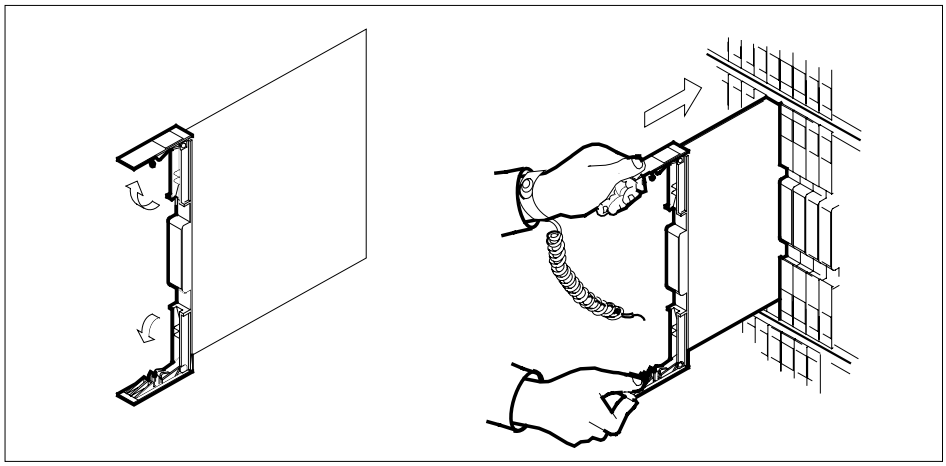

8 Seat and lock the card.

a Use your fingers to push on the upper and lower edges of the faceplate, reseat the card completely.

b Close the locking levers.

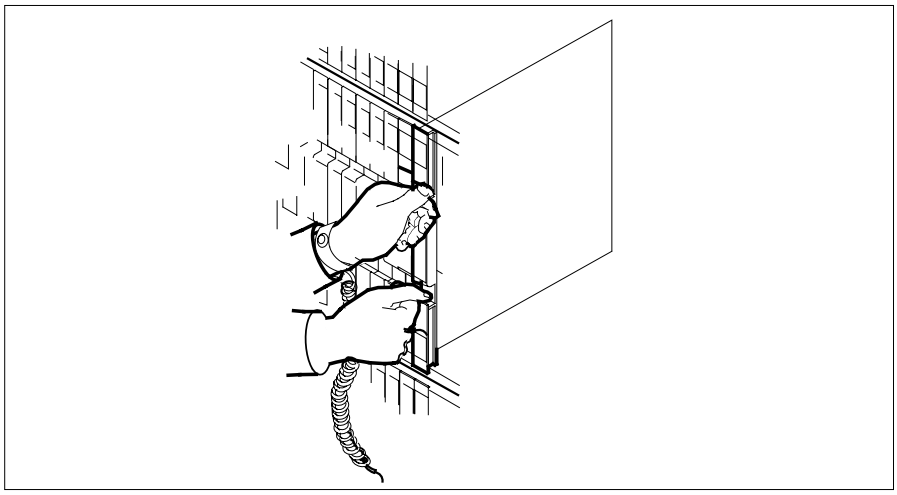

9 Use the following information to determine the next step in this procedure.

If you enter this procedure from	Do
a procedure that clears an alarm	step 16
other than listed here	step 10

At the MAP display

10 To load the RMM, type

>LOADPM

and press the Enter key.

11 To test the RMM, type

>TST

and press the Enter key.

Example of a MAP response:

```
Test Passed
    or
Test Failed
```

If TST	Do
passes	step 12
fails	step 17

NT2X59 in an RLCM-EDC RMM (end)

12 To return the RMM to service, type

>RTS

and press the Enter key.

If RTS	Do
passes	step 13
fails	step 17

13 To send defective cards for repair, follow the local procedures.

14 Record information for office records, as follows:

- date of the card replacement
- serial number of the card
- details or reasons for replacement of the card

15 Go to step 18.

16 Return to the *Clearing an alarm procedure* that directs you to this card replacement procedure. If necessary, go to the point where the system produces the defective card list. Identify the next defective card on the list. In this manual, go to the appropriate replacement procedure for the card.

17 For additional help, contact the next level of maintenance.

18 The procedure is complete. Return to the maintenance procedure that directs you to this card replacement procedure. Continue as directed.

NT2X59 in an RLCM RMM

Application

Use this procedure to replace the following card in an RMM.

PEC	Suffixes	Name
NT2X59	AA	Group CODEC Card

Common procedures

The common replacing a card procedure is referenced in this procedure.

Action

The following flowchart is a summary of the procedure. To replace the card, use the instructions in the procedure that follows the flowchart.

NT2X59 in an RLCM RMM (continued)

Summary of card replacement procedure for an NT2X59 card in an RMM

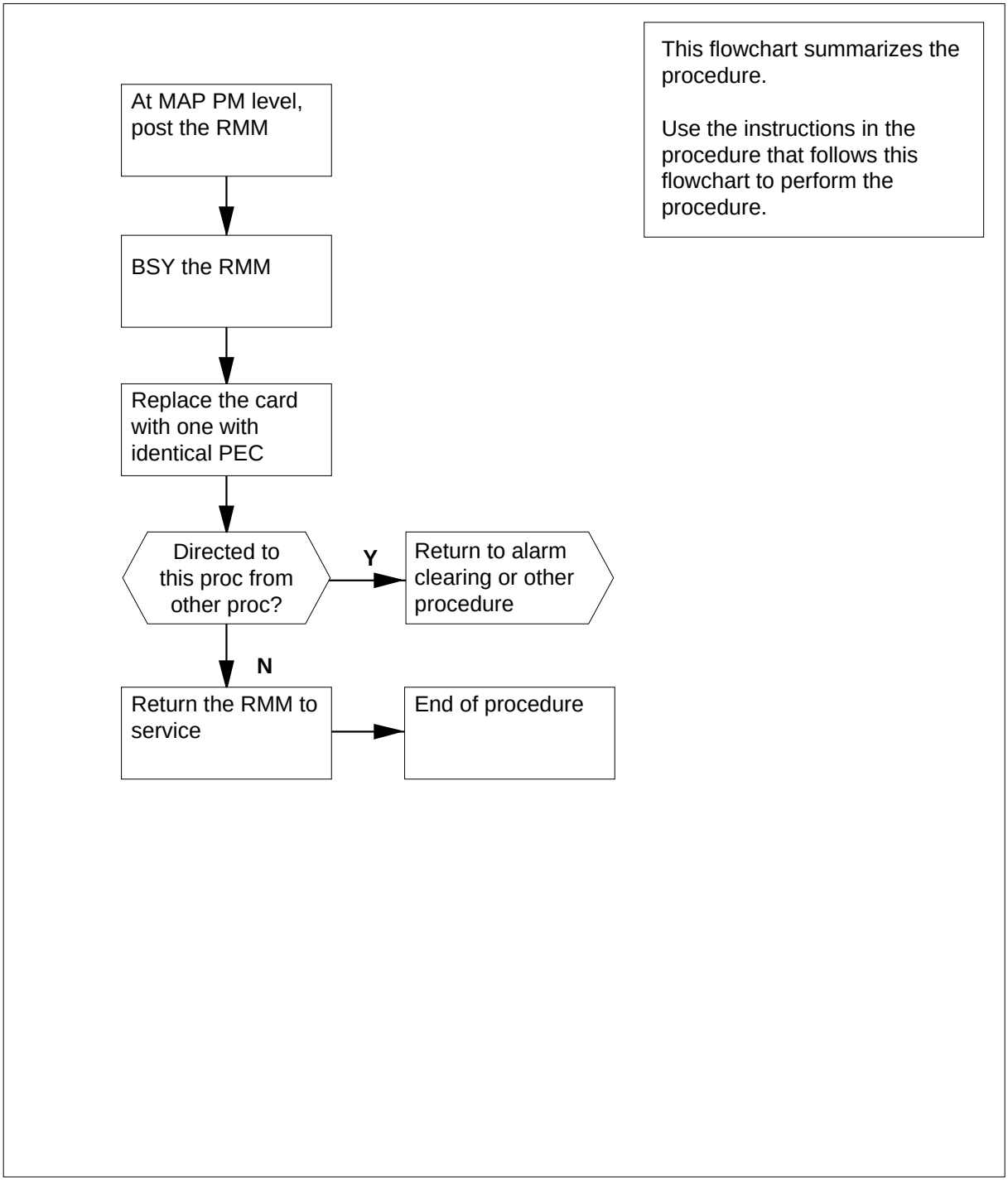

Replacing an NT2X59 card in an RMM

At your current location

1 Proceed only if you were either directed to this card replacement procedure from a step in a maintenance procedure, are using the procedure to verify or accept cards, or were directed to this procedure by your maintenance support group.

2 Obtain a replacement card. Ensure that the replacement card has the same product equipment code (PEC) including suffix, as the card to be removed.

At the MAP display

3 Access the PM level and post the RMM by typing

>MAPCI;MTC;PM;POST RMM rmm_no

and pressing the Enter key.

where

rmm_no
is the number of the RMM where the card is to be replaced

Example of a MAP display:

```
   CM    MS    IOD    Net    PM    CCS    LNS    Trks    Ext    APPL
   .     .      .      .    4SysB   .      .       .      .      .

RMM               SysB     ManB     OffL     CBsy     ISTb      InSv
 0 Quit    PM        4        0       10        3        3       130
 2 Post_   RMM       1        0        0        0        0        15
 3
 4         RMM  5  SysB
 5 Trnsl
 6 Tst
 7 Bsy
 8 RTS
 9 OffL
10 LoadPM
11 Disp_
12 Next
13
14 QueryPM
15
16
17
18
```

4 Busy the RMM by typing

>BSY

and pressing the Enter key.

NT2X59
in an RLCM RMM (continued)

Example of a MAP display:

```
   CM    MS    IOD    Net    PM    CCS    LNS    Trks    Ext    APPL
   .     .      .      .    3SysB   .      .       .      .      .

RMM              SysB     ManB     OffL     CBsy     ISTb      InSv
 0 Quit    PM       3        0       10        3        3       130
 2 Post_   RMM      0        1        0        0        0        15
 3
 4         RMM  5  ManB
 5 Trnsl
 6 Tst
 7 Bsy
 8 RTS
 9 OffL
10 LoadPM
11 Disp_
12 Next
13
14 QueryPM
15
16
17
18
```

At the RMM shelf

5

CAUTION
Static discharge may cause damage to circuit packs
Put on a wrist strap and connect it to the frame of the RMM before removing or inserting any cards. This protects the RMM against service degradation caused by static electricity.

Replace the NT2X59 card using the common replacing a card procedure in this document. When you have completed the procedure, return to this point.

6 Use the following information to determine the next step in this procedure.

If you entered this procedure	Do
from an alarm clearing procedure	step 12
from other procedure	step 7

NT2X59 in an RLCM RMM (end)

At the MAP display

7 Load the RMM by typing

>LOADPM

and pressing the Enter key.

If LOADPM command	Do
passed	step 8
failed	step 13

8 Return the RMM to service by typing

>RTS

and pressing the Enter key.

If RTS	Do
passed	step 9
failed	step 13

9 Send any faulty cards for repair according to local procedure.

10 Record the following items in office records:

- date the card was replaced
- serial number of the card
- symptoms that prompted replacement of the card

11 Go to step 14.

12 Return to the *Alarm Clearing Procedure* that directed you to this card replacement procedure. If necessary, go to the point where the faulty card list was produced, identify the next faulty card on the list, and go to the appropriate replacement procedure in this manual for that card.

13 Obtain further assistance in replacing this card by contacting personnel responsible for higher level of support.

14 You have successfully completed this procedure. Return to the maintenance procedure that directed you to this card replacement procedure and continue as directed.

NT2X59 in an RSC RMM

Application

Use this procedure to replace the following card in an RSC RMM.

PEC	Suffixes	Name
NT2X59	AA	Group CODEC card

Common Procedures

None

Action

The following flowchart is only a summary of the procedure. To replace the card, use the instructions in the procedure that follows the flowchart.

NT2X59
in an RSC RMM (continued)

Summary of card replacement procedure for an NT2X59 card in an RSC RMM

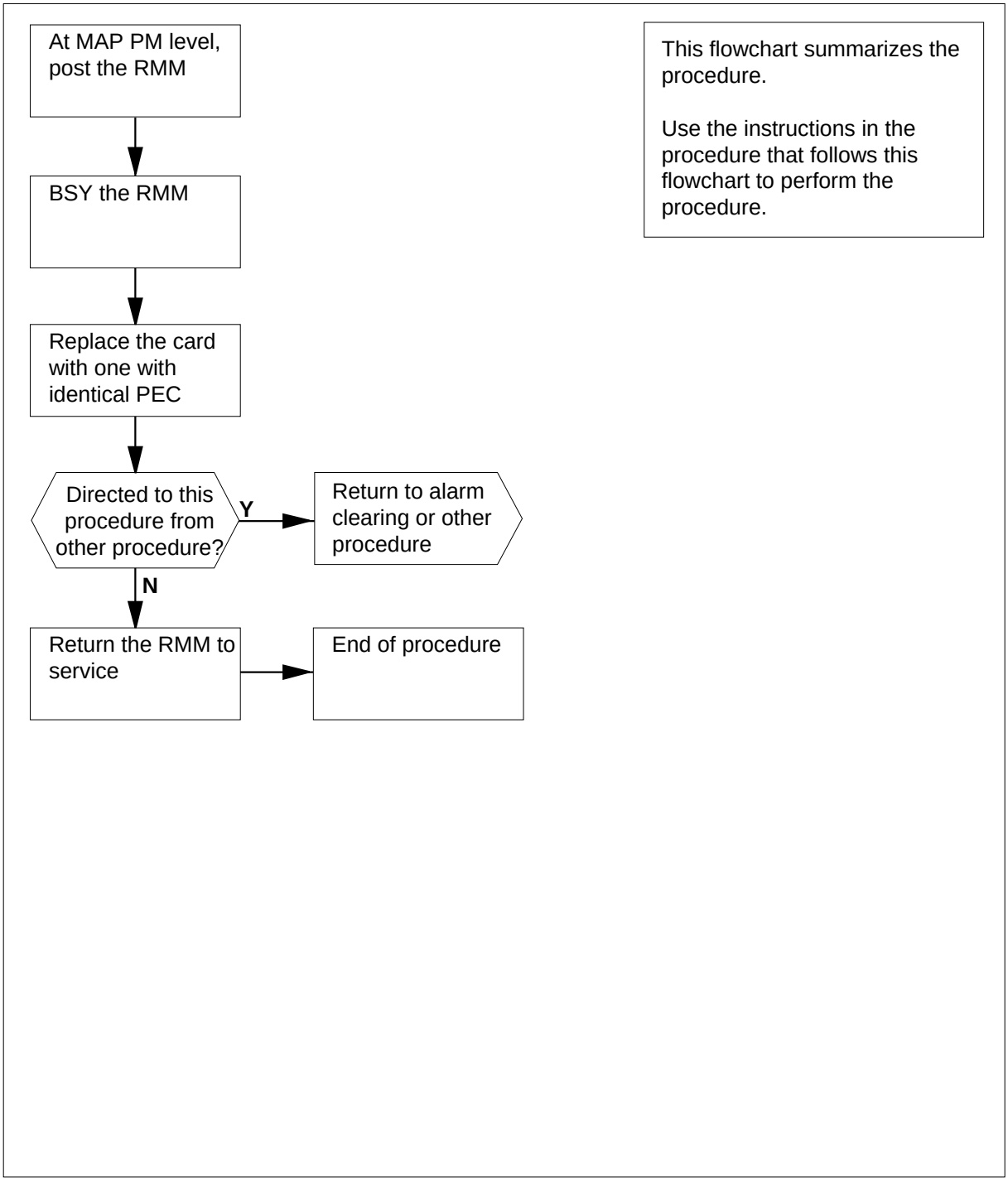

NT2X59
in an RSC RMM (continued)

Replacing an NT2X59 card in RSC RMM

At your current location

1 Proceed only if you were either directed to this card replacement procedure from a step in a maintenance procedure, are using the procedure to verify or accept cards, or were directed to this procedure by your maintenance support group.

2 Obtain a replacement card. Ensure the replacement card has the same product equipment code (PEC) including suffix, as the card to be removed.

At the MAP display

3 Access the PM level and post the RMM by typing

>MAPCI;MTC;PM;POST RMM rmm_no

and pressing the Enter key.

where

rmm_no
is the number of the RMM from which the card is to be removed

Example of a MAP display:

```
   CM    MS    IOD    Net    PM    CCS    LNS    Trks    Ext    APPL
   .     .      .      .    4SysB   .      .       .      .      .

RMM               SysB     ManB     OffL     CBsy     ISTb      InSv
 0 Quit    PM        4        0       10        3        3       130
 2 Post_   RMM       0        1        1        0        0         2
 3
 4         RMM  5  INSV
 5 Trnsl
 6 Tst
 7 Bsy
 8 RTS
 9 OffL
10 LoadPM
11 Disp_
12 Next
13
14 QueryPM
15
16
17
18
```

4 Busy the RMM by typing

>BSY

and pressing the Enter key.

NT2X59 in an RSC RMM (continued)

Example of a MAP display:

```
   CM     MS     IOD     Net     PM     CCS     LNS     Trks     Ext     APPL
   .      .       .       .    4SysB    .       .        .       .       .

RMM                SysB      ManB      OffL      CBsy      ISTb       InSv
 0 Quit    PM         4         0        10         3         3        130
 2 Post_   RMM        0         1         1         0         0          2
 3
 4         RMM  5  ManB
 5 Trnsl
 6 Tst
 7 Bsy
 8 RTS
 9 OffL
10 LoadPM
11 Disp_
12 Next
13
14 QueryPM
15
16
17
18
```

At the RMM shelf

5

CAUTION
Static discharge may cause damage to circuit packs
Put on a wrist strap and connect it to the frame of the RMM before removing or inserting any cards. This protects the RMM against service degradation caused by static electricity.

Put on a wrist strap.

6

DANGER
Equipment damage
Take these precautions when removing or inserting a card:

1. Do not apply direct pressure to the components.
2. Do not force the cards into the slots.

Remove the NT2X59 card as shown in the following figures.

NT2X59
in an RSC RMM (continued)

a Locate the card to be removed on the appropriate shelf.

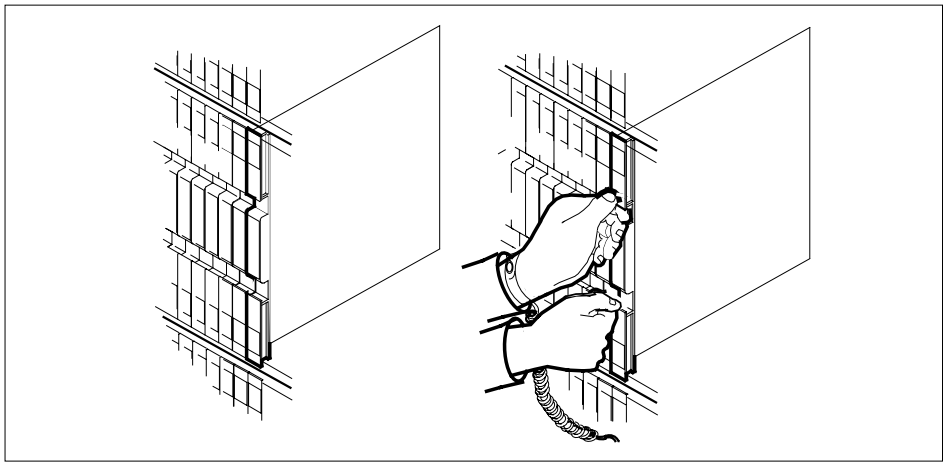

b Open the locking levers on the card to be replaced and gently pull the card towards you until it clears the shelf.

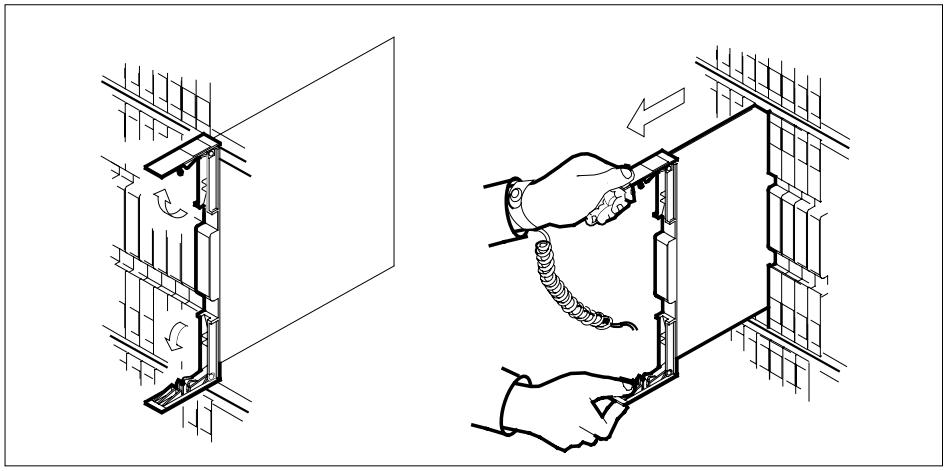

c Ensure the replacement card has the same PEC, including suffix, as the card you just removed.

7 Open the locking levers on the replacement card.

Align the card with the slots in the shelf and gently slide the card into the shelf.

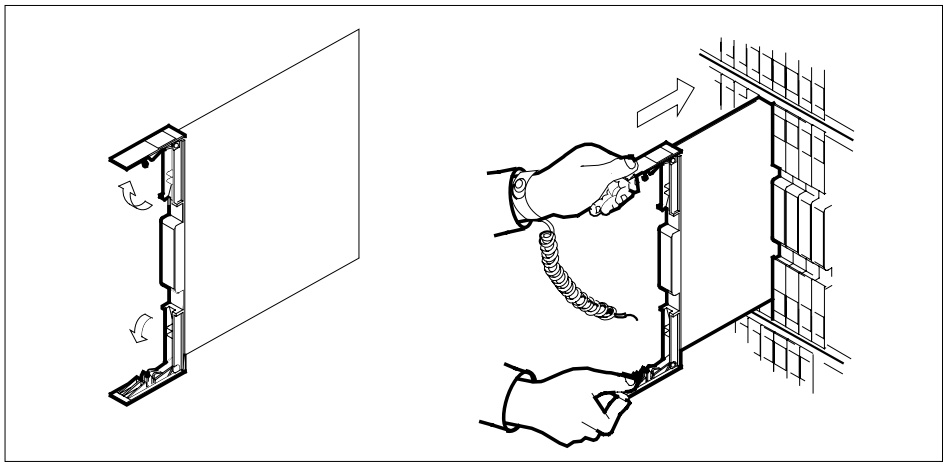

8 Seat and lock the card.

a Using your fingers or thumbs, push on the upper and lower edges of the faceplate to ensure the card is fully seated in the shelf.

b Close the locking levers.

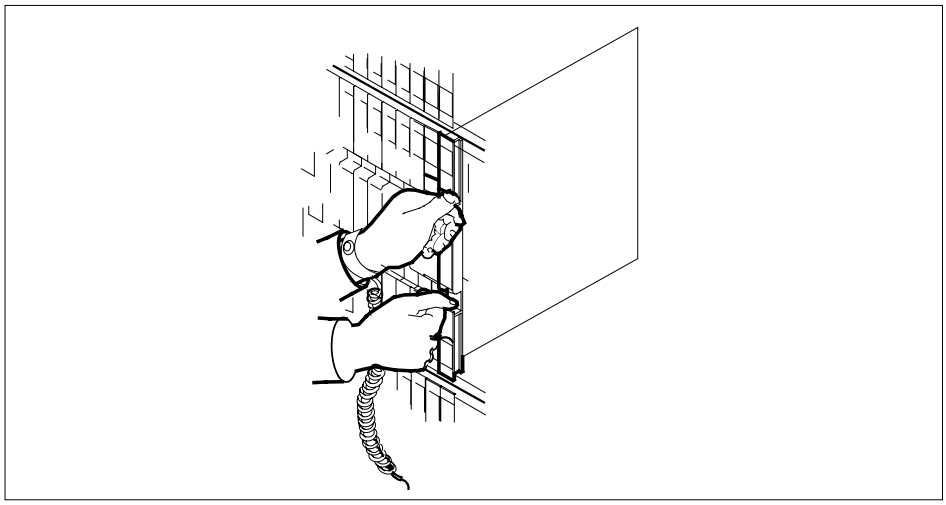

9 Use the following information to determine the next step in this procedure.

If you entered this procedure	Do
from an alarm clearing procedure	step 15
from other	step 10

NT2X59 in an RSC RMM (end)

At the MAP display

10 Load the RMM by typing

>LOADPM

and pressing the Enter key.

11 Return the RMM to service by typing

>RTS

and pressing the Enter key.

If the RTS	Do
passed	step 12
failed	step 16

12 Send any faulty cards for repair according to local procedure.

13 Record the following items in office records:

- date the card was replaced
- serial number of the card
- symptoms that prompted replacement of the card

14 Go to step 17.

15 Return to the *Alarm Clearing Procedure* that directed you to this card replacement procedure. If necessary, go to the point where the faulty card list was produced, identify the next faulty card on the list, and go to the appropriate replacement procedure in this manual for that card.

16 Obtain further assistance in replacing this card by contacting personnel responsible for higher level of support.

17 You have successfully completed this procedure. Return to the maintenance procedure that directed you to this card replacement procedure and continue as directed.

NT2X59 in an RSC-S (DS-1) Model A RMM

Application

Use this procedure to replace an NT2X59 card in an RSC-S RMM.

PEC	Suffixes	Name
NT2X59	AA	Group Codec

Common procedures

None

Action

The following flowchart is only a summary of the procedure. To replace the card, use the instructions in the procedure that follows the flowchart.

NT2X59
in an RSC-S (DS-1) Model A RMM (continued)

Summary of card replacement procedure for an NT2X59 card in RSC-S RMM

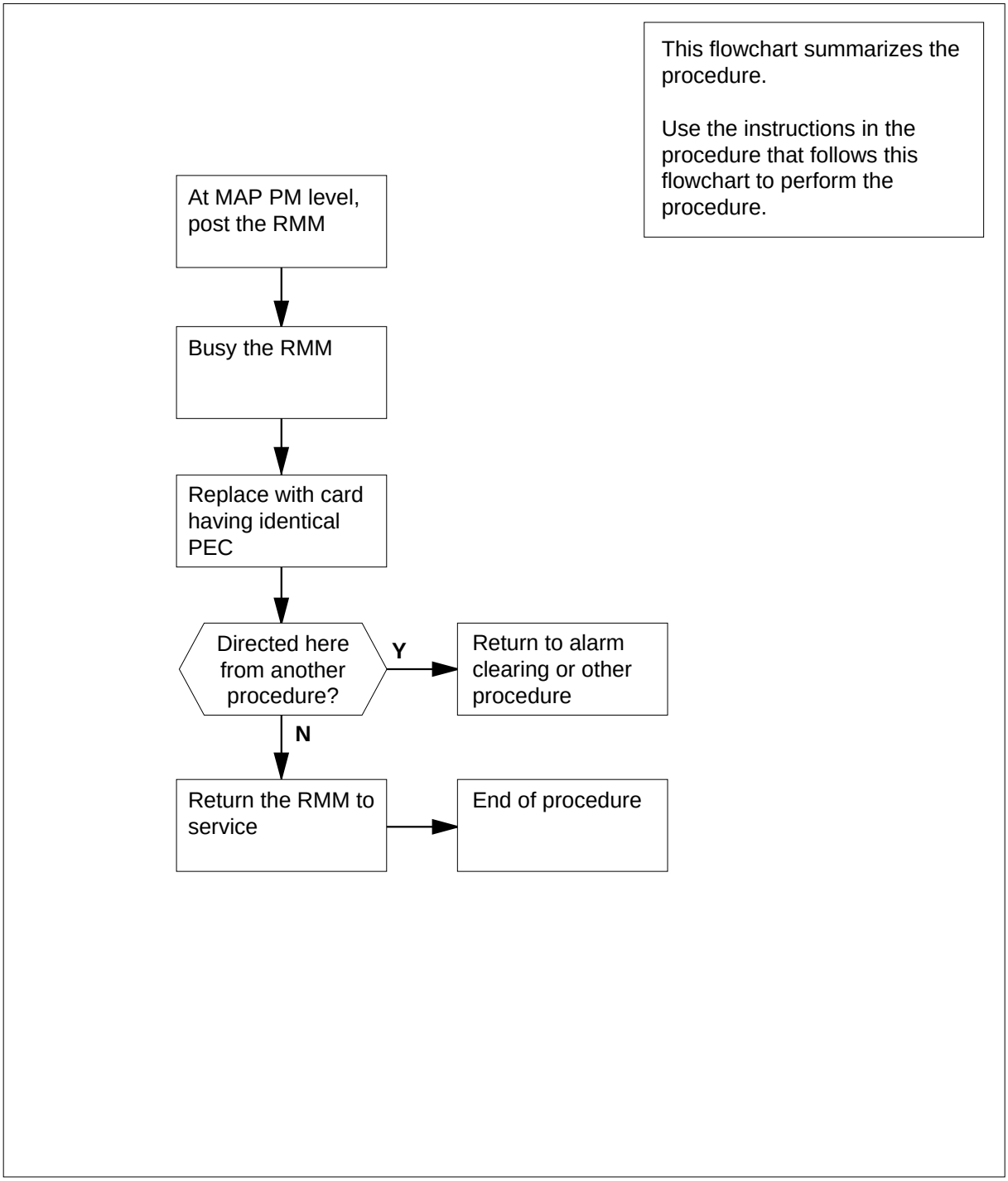

Replacing an NT2X59 card in RSC-S RMM

At your Current Location

1 Proceed only if you have been directed to this card replacement procedure from a step in a maintenance procedure, are using the procedure for verifying or accepting cards, or have been directed to this procedure by your maintenance support group.

2 Obtain an NT2X59 replacement card. Ensure the replacement card has the same product equipment code (PEC), including suffix, as the card that is to be removed.

At the MAP terminal

3 Set the MAP display to the PM level and post the RMM by typing

>MAPCI;MTC;PM;POST RMM rmm_no

and pressing the Enter key.

where

rmm_no
is the number of the RMM where the card is to be removed

Example of a MAP display:

```
 CM    MS    IOD    Net    PM    CCS    LNS    Trks    Ext   Appl
 .     .       .      .     .      .      .       .       .     .

RMM            SysB     ManB     OffL     CBsy     ISTb     InSv
 0 Quit    PM     0        0        0        0        0      130
 2 Post_   RMM   0        0        0        0        0        0
 3
 4         RMM  5  INSV
 5 Trnsl
 6 Tst
 7 Bsy
 8 RTS
 9 OffL
10 LoadPM
11 Disp_
12 Next
13
14 QueryPM
15
16
17
18
```

4 Busy the RMM by typing

>BSY

NT2X59 in an RSC-S (DS-1) Model A RMM (continued)

and pressing the Enter key.

Example of a MAP display:

```
 CM    MS    IOD    Net    PM    CCS    LNS    Trks    Ext    Appl
 .      .      .      .     1ManB  .      .      .       .      .

RMM              SysB     ManB     OffL     CBsy    ISTb     InSv
 0 Quit    PM       4        0       10        0       0      130
 2 Post_   RMM      0        1        0        0       0        0
 3
 4         RMM  5  ManB
 5 Trnsl
 6 Tst
 7 Bsy
 8 RTS
 9 OffL
10 LoadPM
11 Disp_
12 Next
13
14 QueryPM
15
16
17
18
```

At the RMM shelf

5

CAUTION
Static discharge may cause damage to circuit packs
Put on a wrist strap and connect it to the frame of the RMM before removing any cards. This protects the RMM against service degradation caused by static electricity.

Put on a wrist strap.

6 Remove the NT2X59 card as shown in the following figures.

a Locate the card to be removed on the appropriate shelf.

NT2X59
in an RSC-S (DS-1) Model A RMM (continued)

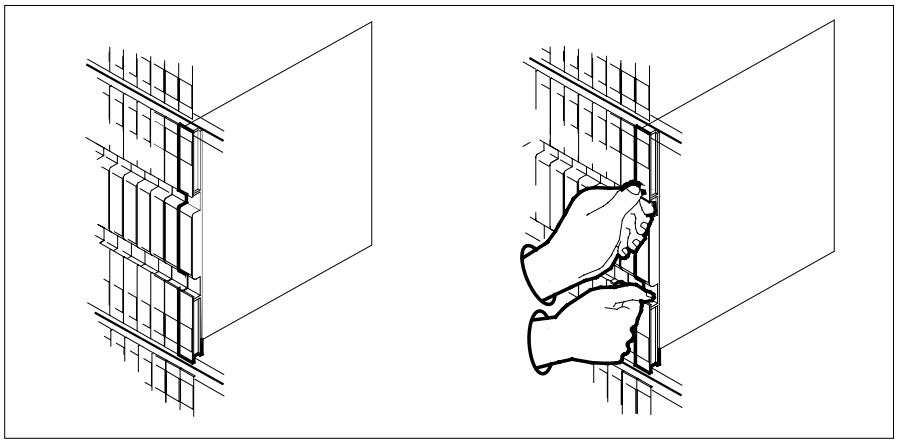

b Open the locking levers on the card to be replaced and gently pull the card toward you until it clears the shelf.

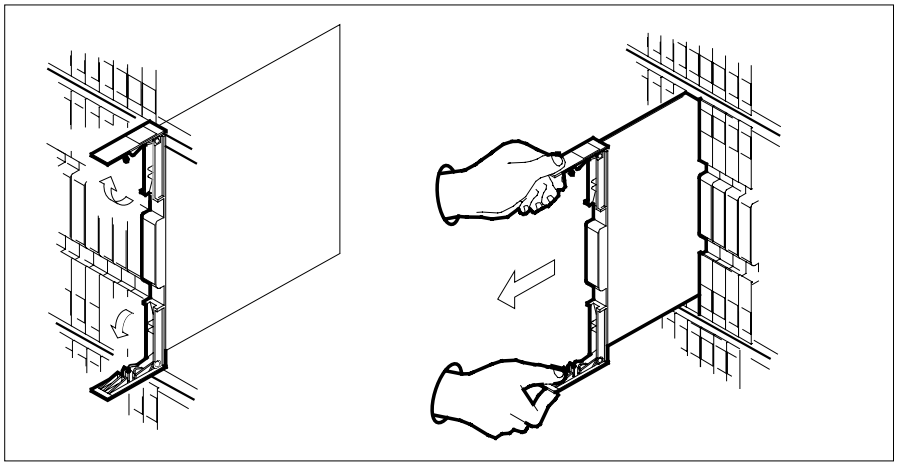

c Ensure the replacement card has the same PEC, including suffix, as the card you just removed.

7 Open the locking levers on the replacement card.

a Align the card with the slots in the shelf.

b Gently slide the card into the shelf.

NT2X59
in an RSC-S (DS-1) Model A RMM (continued)

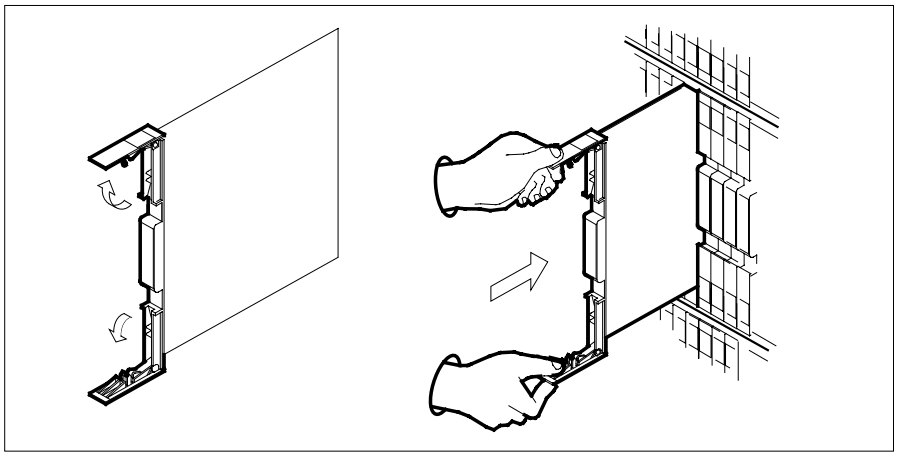

8

DANGER
Equipment damage
Take these precautions when removing or inserting a card:

1. Do not apply direct pressure to the components.
2. Do not force the card into the slot.

Seat and lock the card.

a Using your fingers or thumbs, push on the upper and lower edges of the faceplate to ensure the card is fully seated in the shelf.

b Close the locking levers.

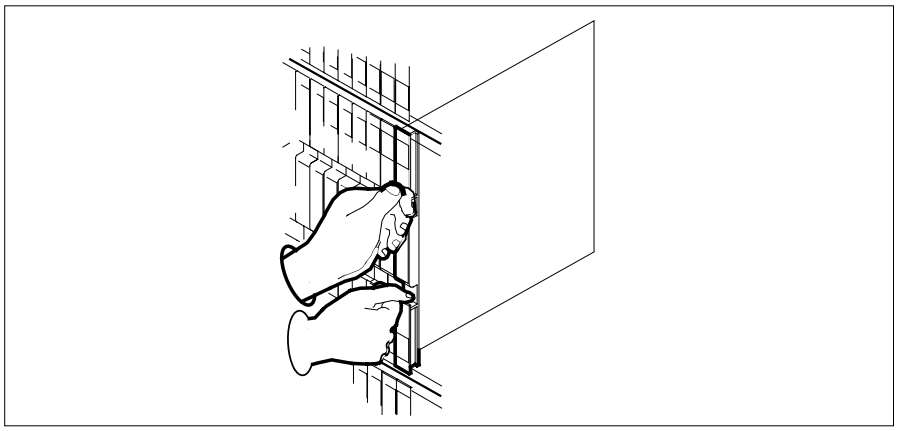

NT2X59 in an RSC-S (DS-1) Model A RMM (end)

9 Use the following information to determine where to proceed.

If you entered this procedure from	Do
alarm clearing procedures	step 14
other	step 10

At the MAP terminal

10 Test the RMM by typing

>TST

and pressing the Enter key.

If TST	Do
passed	step 11
failed	step 14

11 Return the RMM to service by typing

>RTS

and pressing the Enter key.

If RTS	Do
passed	step 12
failed	step 15

12 Send any faulty cards for repair according to local procedure.

13 Record the date the card was replaced, the serial number of the card, and the symptoms that prompted replacement of the card. Go to step 16.

14 Return to the procedure that directed you to this procedure. At the point where a faulty card list was produced, identify the next faulty card on the list and go to the appropriate card replacement procedure for that card in this manual.

15 Obtain further assistance in replacing this card by contacting operating company maintenance personnel.

16 You have successfully completed this procedure. Return to the maintenance procedure that directed you to this card replacement procedure and continue as directed.

NT2X59 in an RSC-S (DS-1) Model B RMM

Application

Use this procedure to replace an NT2X59 card in an RSC-S RMM.

PEC	Suffixes	Name
NT2X59	AA	Group Codec

Common procedures

None

Action

The following flowchart is only a summary of the procedure. To replace the card, use the instructions in the procedure that follows the flowchart.

NT2X59
in an RSC-S (DS-1) Model B RMM (continued)

Summary of card replacement procedure for an NT2X59 card in RSC-S RMM

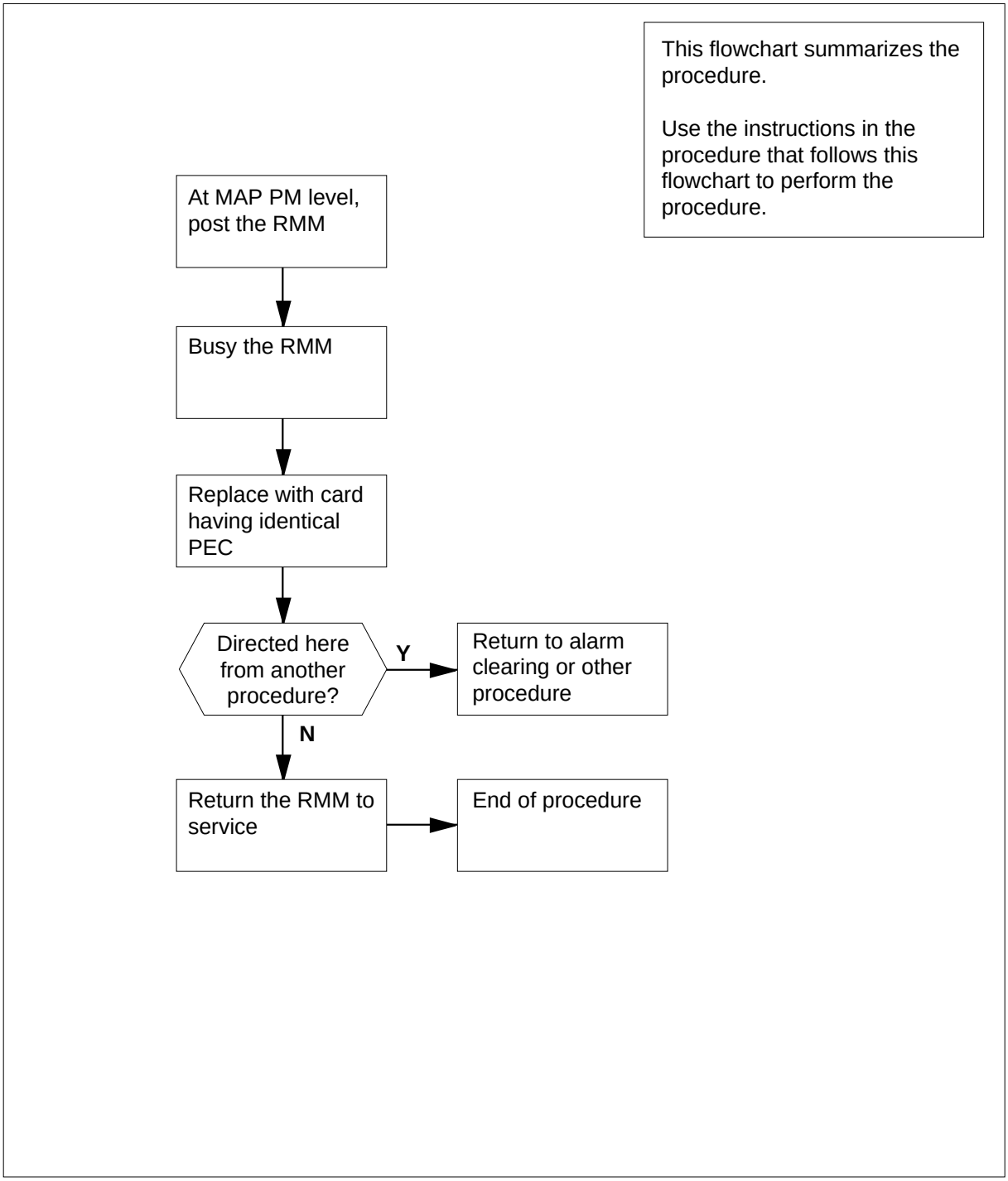

NT2X59
in an RSC-S (DS-1) Model B RMM (continued)

Replacing an NT2X59 card in RSC-S RMM

At your Current Location

1 Proceed only if you have been directed to this card replacement procedure from a step in a maintenance procedure, are using the procedure for verifying or accepting cards, or have been directed to this procedure by your maintenance support group.

2 Obtain an NT2X59 replacement card. Ensure the replacement card has the same product equipment code (PEC), including suffix, as the card that is to be removed.

At the MAP terminal

3 Set the MAP display to the PM level and post the RMM by typing

>MAPCI;MTC;PM;POST RMM rmm_no

and pressing the Enter key.

where

rmm_no
is the number of the RMM where the card is to be removed

Example of a MAP display:

```
 CM    MS    IOD    Net    PM    CCS    LNS    Trks    Ext   Appl
 .     .      .      .     .      .      .      .       .     .

RMM            SysB     ManB     OffL     CBsy     ISTb     InSv
 0 Quit    PM     0        0        0        0        0      130
 2 Post_   RMM   0        0        0        0        0        0
 3
 4         RMM  5  INSV
 5 Trnsl
 6 Tst
 7 Bsy
 8 RTS
 9 OffL
10 LoadPM
11 Disp_
12 Next
13
14 QueryPM
15
16
17
18
```

4 Busy the RMM by typing

>BSY

and pressing the Enter key.

Example of a MAP display:

```
 CM     MS     IOD     Net     PM     CCS     LNS     Trks     Ext     Appl
 .       .       .       .     1ManB   .       .       .         .       .

RMM               SysB      ManB      OffL      CBsy     ISTb      InSv
 0 Quit     PM       4         0        10         0        0       130
 2 Post_    RMM      0         1         0         0        0         0
 3
 4          RMM  5  ManB
 5 Trnsl
 6 Tst
 7 Bsy
 8 RTS
 9 OffL
10 LoadPM
11 Disp_
12 Next
13
14 QueryPM
15
16
17
18
```

At the RMM shelf

5

CAUTION
Static discharge may cause damage to circuit packs
Put on a wrist strap and connect it to the frame of the RMM before removing any cards. This protects the RMM against service degradation caused by static electricity.

Put on a wrist strap.

6 Remove the NT2X59 card as shown in the following figures.

a Locate the card to be removed on the appropriate shelf.

NT2X59
in an RSC-S (DS-1) Model B RMM (continued)

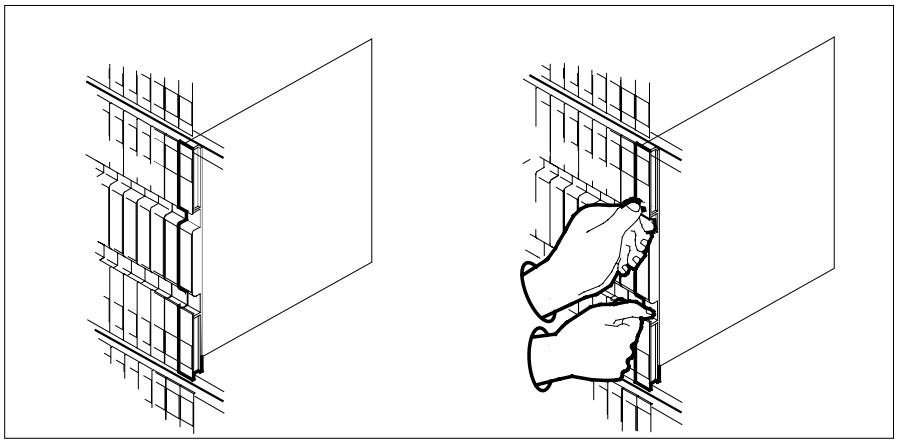

b Open the locking levers on the card to be replaced and gently pull the card toward you until it clears the shelf.

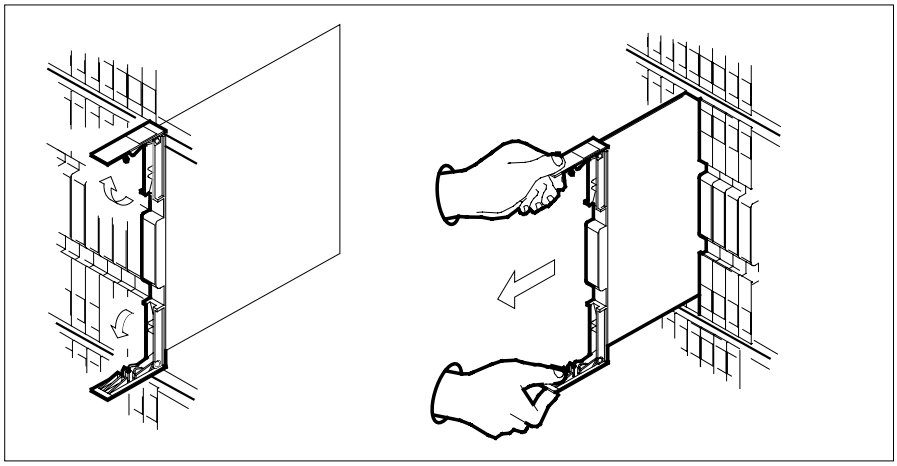

c Ensure the replacement card has the same PEC, including suffix, as the card you just removed.

7 Open the locking levers on the replacement card.

a Align the card with the slots in the shelf.

b Gently slide the card into the shelf.

NT2X59
in an RSC-S (DS-1) Model B RMM (continued)

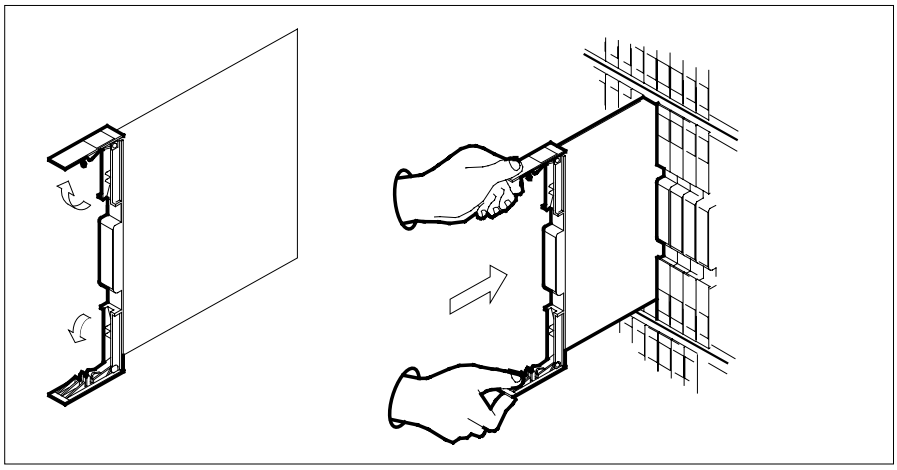

8

DANGER
Equipment damage
Take these precautions when removing or inserting a card:

1. Do not apply direct pressure to the components.
2. Do not force the card into the slot.

Seat and lock the card.

a Using your fingers or thumbs, push on the upper and lower edges of the faceplate to ensure the card is fully seated in the shelf.

b Close the locking levers.

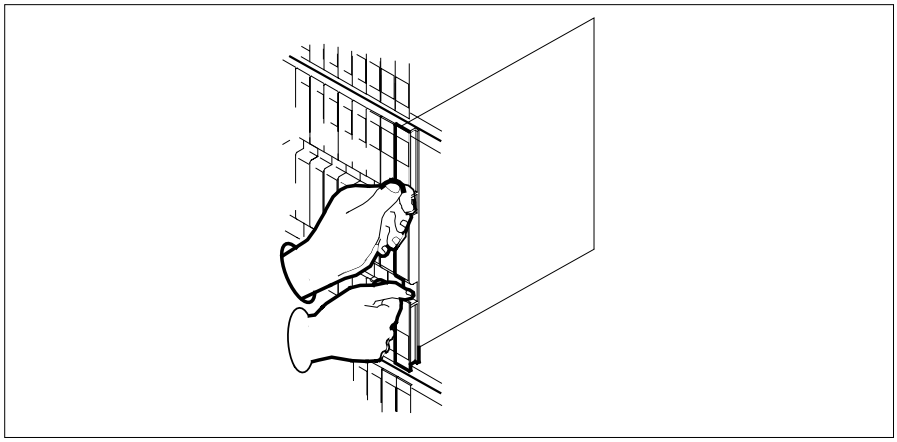

NT2X59 in an RSC-S (DS-1) Model B RMM (end)

9 Use the following information to determine where to proceed.

If you entered this procedure from	Do
alarm clearing procedures	step 14
other	step 10

At the MAP terminal

10 Test the RMM by typing

>TST

and pressing the Enter key.

If TST	Do
passed	step 11
failed	step 14

11 Return the RMM to service by typing

>RTS

and pressing the Enter key.

If RTS	Do
passed	step 12
failed	step 15

12 Send any faulty cards for repair according to local procedure.

13 Record the date the card was replaced, the serial number of the card, and the symptoms that prompted replacement of the card. Go to step 16.

14 Return to the procedure that directed you to this procedure. At the point where a faulty card list was produced, identify the next faulty card on the list and go to the appropriate card replacement procedure for that card in this manual.

15 Obtain further assistance in replacing this card by contacting operating company maintenance personnel.

16 You have successfully completed this procedure. Return to the maintenance procedure that directed you to this card replacement procedure and continue as directed.

NT2X59 in an RSC-S (PCM-30) Model A RMM

Application

Use this procedure to replace an NT2X59 card in an RSC-S RMM.

PEC	Suffixes	Name
NT2X59	AA	Group Codec

Common procedures

None

Action

The following flowchart is only a summary of the procedure. To replace the card, use the instructions in the procedure that follows the flowchart.

NT2X59
in an RSC-S (PCM-30) Model A RMM (continued)

Summary of card replacement procedure for an NT2X59 card in RSC-S RMM

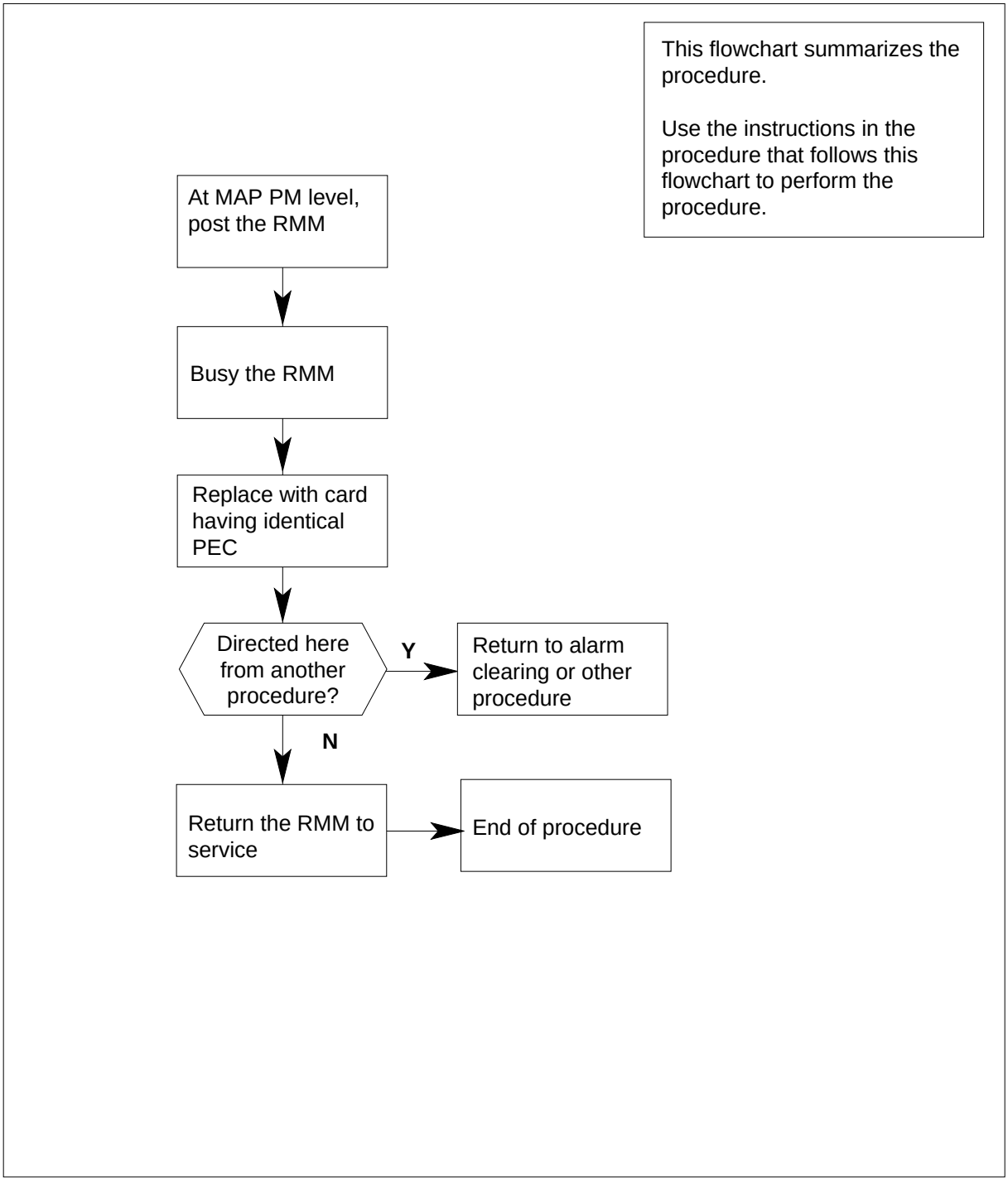

NT2X59 in an RSC-S (PCM-30) Model A RMM (continued)

Replacing an NT2X59 card in RSC-S RMM

1 Proceed only if you have been directed to this card replacement procedure from a step in a maintenance procedure, are using the procedure for verifying or accepting cards, or have been directed to this procedure by your maintenance support group.

2 Obtain an NT2X59 replacement card. Ensure the replacement card has the same product equipment code (PEC), including suffix, as the card that is to be removed.

At the MAP terminal

3 Set the MAP display to the PM level and post the RMM by typing

>MAPCI;MTC;PM;POST RMM rmm_no

and pressing the Enter key.

where

rmm_no
is the number of the RMM where the card is to be removed

Example of a MAP display:

```
 CM    MS    IOD    Net    PM    CCS    LNS    Trks    Ext   Appl
 .     .       .      .     .      .      .       .       .     .
RMM           SysB     ManB     OffL     CBsy     ISTb     InSv
 0 Quit    PM     0        0        0        0        0      130
 2 Post_   RMM    0        0        0        0        0        0
 3
 4         RMM  5  INSV
 5 Trnsl
 6 Tst
 7 Bsy
 8 RTS
 9 OffL
10 LoadPM
11 Disp_
12 Next
13
14 QueryPM
15
16
17
18
```

4 Busy the RMM by typing

>BSY

NT2X59 in an RSC-S (PCM-30) Model A RMM (continued)

and pressing the Enter key.

Example of a MAP display:

```
 CM    MS    IOD    Net    PM    CCS    LNS    Trks    Ext    Appl
 .      .      .      .     1ManB   .      .      .       .      .
RMM             SysB     ManB     OffL     CBsy    ISTb     InSv
 0 Quit    PM       4        0       10        0       0      130
 2 Post_   RMM      0        1        0        0       0        0
 3
 4         RMM  5  ManB
 5 Trnsl
 6 Tst
 7 Bsy
 8 RTS
 9 OffL
10 LoadPM
11 Disp_
12 Next
13
14 QueryPM
15
16
17
18
```

At the RMM shelf

5

CAUTION
Static discharge may cause damage to circuit packs
Put on a wrist strap and connect it to the frame of the RMM before removing any cards. This protects the RMM against service degradation caused by static electricity.

Put on a wrist strap.

6 Remove the NT2X59 card as shown in the following figures.

a Locate the card to be removed on the appropriate shelf.

NT2X59
in an RSC-S (PCM-30) Model A RMM (continued)

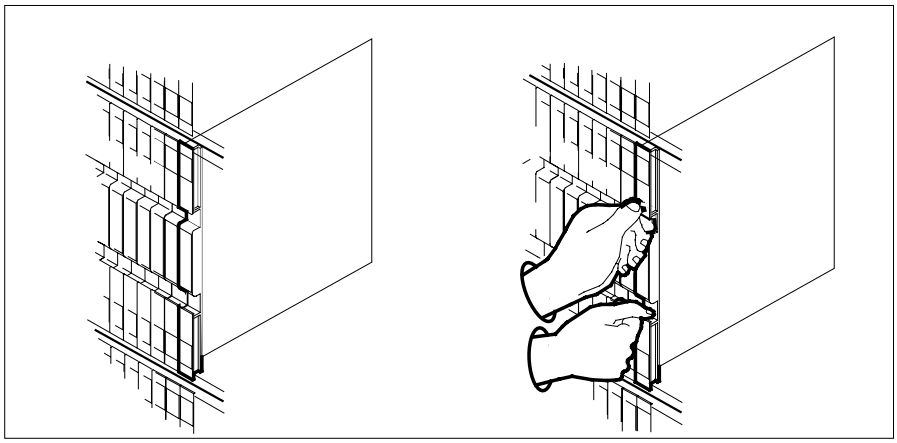

b Open the locking levers on the card to be replaced and gently pull the card toward you until it clears the shelf.

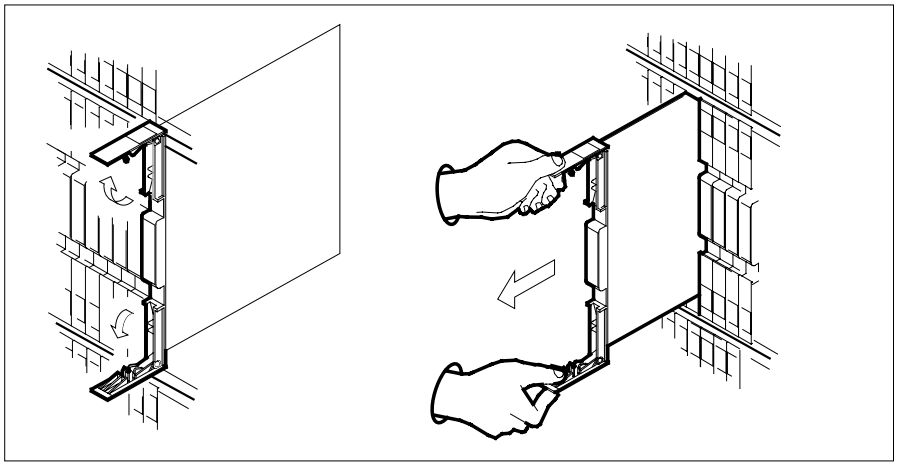

c Ensure the replacement card has the same PEC, including suffix, as the card you just removed.

7 Open the locking levers on the replacement card.

a Align the card with the slots in the shelf.

b Gently slide the card into the shelf.

NT2X59
in an RSC-S (PCM-30) Model A RMM (continued)

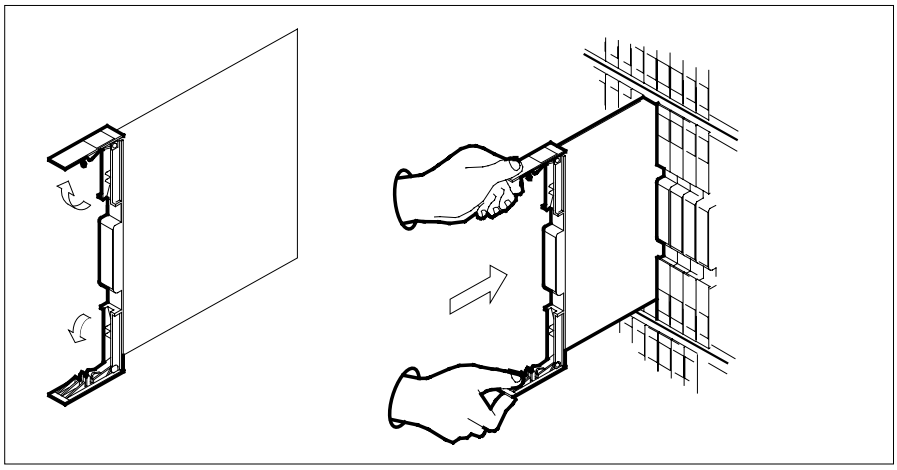

8

DANGER
Equipment damage
Take these precautions when removing or inserting a card:

1. Do not apply direct pressure to the components.
2. Do not force the card into the slot.

Seat and lock the card.

a Using your fingers or thumbs, push on the upper and lower edges of the faceplate to ensure the card is fully seated in the shelf.

b Close the locking levers.

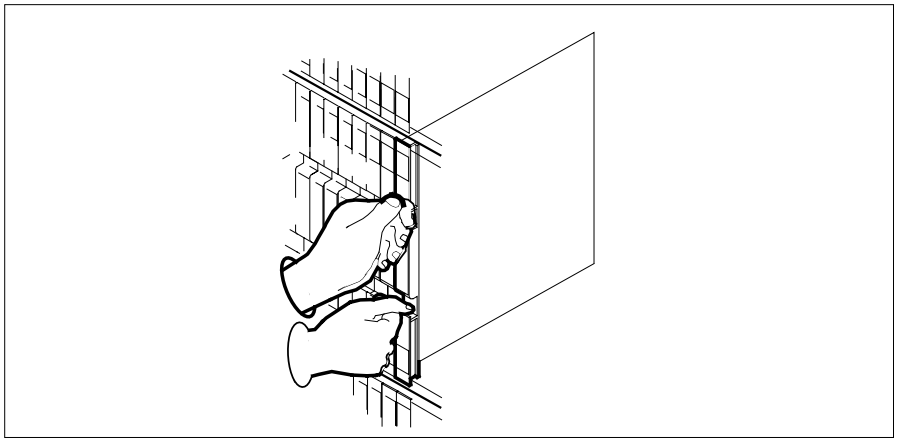

NT2X59 in an RSC-S (PCM-30) Model A RMM (end)

9 Use the following information to determine where to proceed.

If you entered this procedure from	Do
alarm clearing procedures	step 14
other	step 10

At the MAP terminal

10 Test the RMM by typing

>TST

and pressing the Enter key.

If TST	Do
passed	step 11
failed	step 14

11 Return the RMM to service by typing

>RTS

and pressing the Enter key.

If RTS	Do
passed	step 12
failed	step 15

12 Send any faulty cards for repair according to local procedure.

13 Record the date the card was replaced, the serial number of the card, and the symptoms that prompted replacement of the card. Go to step 16.

14 Return to the procedure that directed you to this procedure. At the point where a faulty card list was produced, identify the next faulty card on the list and go to the appropriate card replacement procedure for that card in this manual.

15 Obtain further assistance in replacing this card by contacting operating company maintenance personnel.

16 You have successfully completed this procedure. Return to the maintenance procedure that directed you to this card replacement procedure and continue as directed.

NT2X70 in an IOPAC HIE

Application

Use this procedure to replace the following card in the host interface equipment (HIE) shelf.

PEC	Suffix	Name
NT2X70	AE	Power converter (±5V/±12V)

Common procedures

The common replacing a card procedure is referenced in this procedure.

Action

The following flowchart is a summary of the procedure. To replace the card, use the instructions in the step-action procedure that follows the flowchart.

NT2X70 in an IOPAC HIE (continued)

Summary of card replacement procedure for an NT2X70 in an HIE

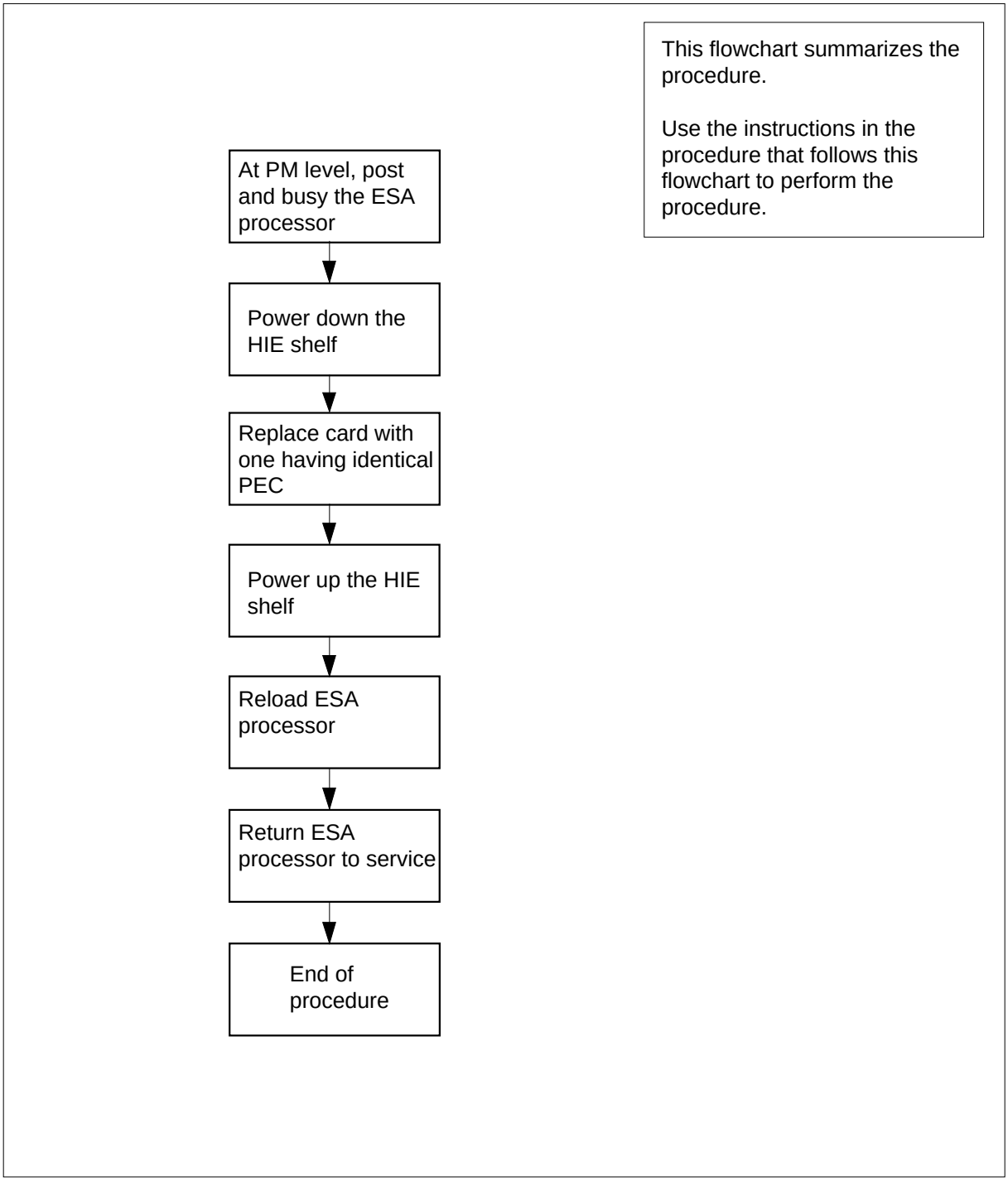

NT2X70 in an IOPAC HIE (continued)

Replacing an NT2X70 in an HIE

At the MAP terminal

1 Get a replacement card. Ensure the replacement card has the same product equipment code (PEC), including suffix, as the card to be removed.

2 If you were directed to this procedure from the *Alarm Clearing Procedures,* go to step 5. Otherwise, continue with step 3.

3 Access the peripheral module (PM) level of the MAP terminal and post the Emergency Stand-Alone (ESA) processor by typing

`>MAPCI;MTC;PM;POST ESA esa_no`

and pressing the Enter key.

where

esa_no
is the number of the ESA processor

4 Busy the ESA processor by typing

>BSY

and pressing the Enter key.

Example of a MAP response:

```
This action will take this PM out of service
Please confirm ("Yes" or "No")
```

Respond by typing

>YES

and pressing the Enter key.

At the HIE

5

WARNING
Static electricity damage
Wear a wrist strap connected to the wrist strap grounding point at the top of each equipment rack, (Bay 0, 1, 2, and 3), while handling circuit cards. This protects the cards against damage caused by static electricity.

Power down the HIE shelf by setting the ON/OFF switch on the power converter faceplate to the OFF position. Both the converter FAIL LED and FRAME FAIL lamp on the MSP will be ON.

NT2X70 in an IOPAC HIE (continued)

6 Replace the NT2X70 card using the common replacing a card procedure in this document. When you have completed the procedure, return here.

7 Power up the HIE.

- Ensure the converter (NT2X70) is inserted. A major audible alarm may sound. This alarm is silenced when power is restored to the converter.
- Set the POWER switch to the ON position.

8 Check the suffix on the NT2X70 card.

If NT2X70 suffix is	Do
AE	step 9
AA, AB, AC, AD	step 10

9 Toggle the ON/OFF/RESET switch on the power converter faceplate to the RESET position and hold while setting the circuit breaker on the MSP to the ON position.

Both the converter FAIL LED and FRAME FAIL lamp on the MSP will go OFF. Release the ON/OFF/RESET switch. Go to step 11.

10 Press the RESET button on the power converter while setting the circuit breaker on the MSP to the ON position. Both the converter FAIL LED and FRAME FAIL lamp on the MSP will be ON.

11 If you were directed to this procedure from the *Alarm Clearing Procedures*, return now to the alarm clearing procedure that directed you here. Otherwise, continue with step 12.

12 Load the ESA processor by typing

`>LOADPM`

and pressing the Enter key.

If	Do
the message `loadfile not found in directory` is received	step 13
load passes	step 28
load fails	step 33

13 Determine the type of device where the PM load files are located.

If load files are located on	Do
tape	step 14
IOC disk	step 20

NT2X70
in an IOPAC HIE (continued)

If load files are located on	Do
SLM disk	step 25

14 Locate the tape that contains the PM load files.

15 Mount the tape on a magnetic tape drive.

16 Download the tape by typing

`>MOUNT tape_no`

and pressing the Enter key.

where

tape_no
is the number of the tape containing the PM load files

17 List the contents of the tape in your user directory by typing

`>LIST T tape_no`

and pressing the Enter key.

where

tape_no
is the number of the tape containing the PM load files

18 Demount the tape drive by typing

`>DEMOUNT T tape_no`

and pressing the Enter key.

where

tape_no
is the number of the tape drive containing the PM load files

19 Go to step 29.

20 From office records, determine and note the number of the input/output controller (IOC) disk and the name of the volume that contains the PM load files.

21 Access the disk utility level of the MAP terminal by typing

`>DSKUT`

and pressing the Enter key.

22 List the IOC file names into your user directory by typing

`>LISTVOL volume_name ALL`

and pressing the Enter key.

where

volume_name
is the name of the volume that contains the PM load files

23 Leave the disk utility by typing

`>QUIT`

and pressing the Enter key.

24 Go to step 29.

25 From office records, determine and note the number of the system load module (SLM) disk and the name of the volume that contains the PM load files.

26 Access the disk utility level of the MAP terminal by typing

```
>DISKUT
```

and pressing the Enter key.

27 List the SLM file names into your user directory by typing

```
>LV CM;LF file_name
```

and pressing the Enter key.

where

file_name
is the name of the SLM disk volume containing the file to be loaded

28 Leave the disk utility by typing

```
>QUIT
```

and pressing the Enter key.

29 Reload the ESA processor by typing

```
>LOADPM
```

and pressing the Enter key.

If	Do
load failed	step 33
load passed	step 30

30 Return the ESA processor to service by typing

```
>RTS
```

and pressing the Enter key.

If RTS	Do
passed	step 31
failed	step 33

31 Send any faulty cards for repair according to local procedure.

32 Record the following items in office records:

- date the card was replaced
- serial number of the card
- symptoms that prompted replacement of the card

NT2X70 in an IOPAC HIE (end)

Go to step 34.

33 Get more assistance in replacing this card by contacting the personnel responsible for higher level of support.

34 You have completed this procedure.

NT2X70 in an OPM HIE

Application

Use this procedure to replace the following card in the host interface equipment (HIE) shelf.

PEC	Suffixes	Name
NT2X70	AA, AB, AC, AD, AE, AF	Power Converter (5V/12V)

Common procedures

The common replacing a card procedure is referenced in this procedure.

Action

The following flowchart is a summary of the procedure. To replace the card, use the instructions in the procedure that follows the flowchart.

NT2X70 in an OPM HIE (continued)

Summary of card replacement procedure for an NT2X70 card in an HIE shelf

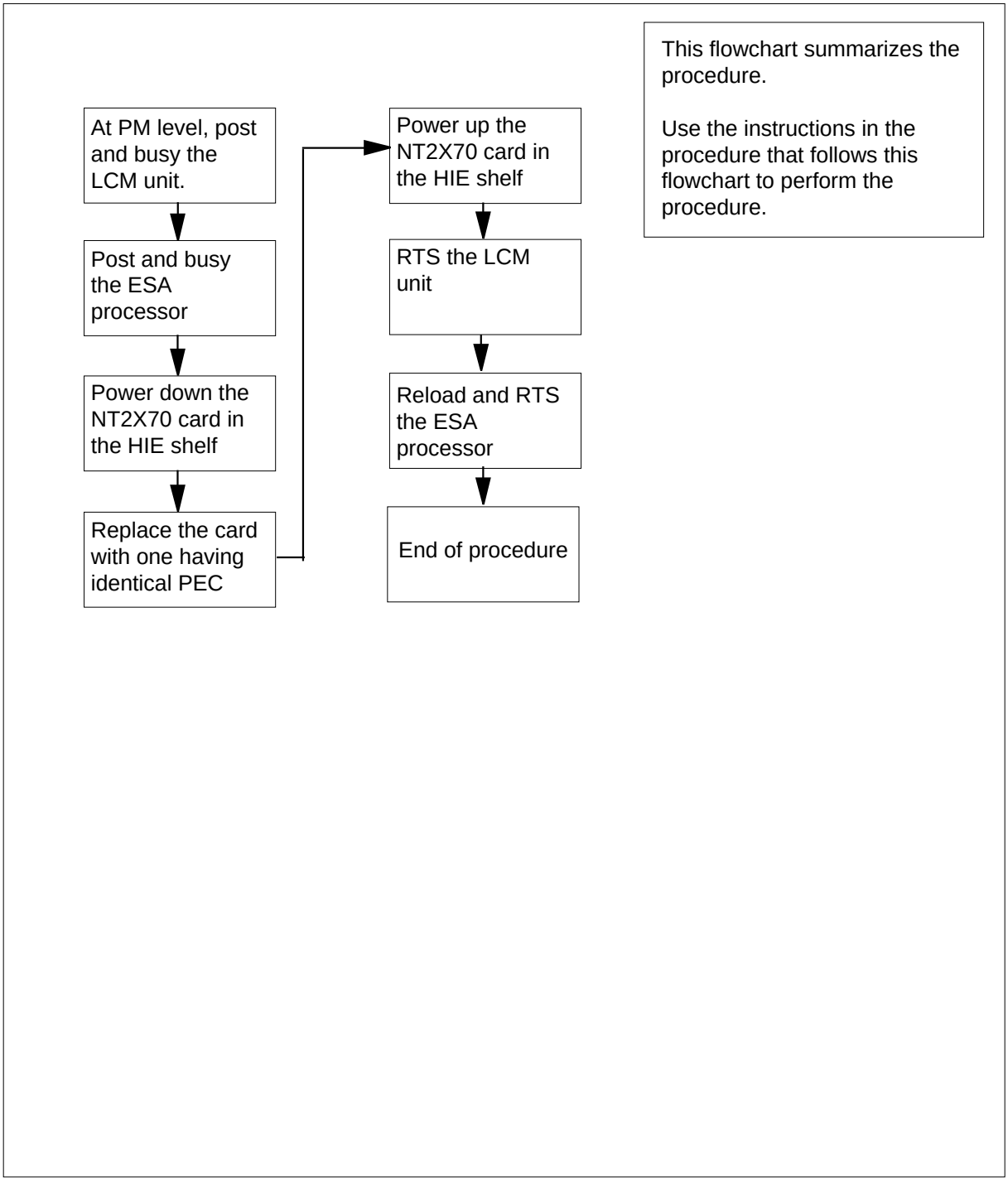

NT2X70 in an OPM HIE (continued)

Replacing an NT2X70 card in an HIE shelf

At your current location

1 Proceed only if you were either directed to this card replacement procedure from a step in a maintenance procedure, are using the procedure to verify or accept cards, or were directed to this procedure by your maintenance support group.

2 Obtain a replacement card. Ensure that the replacement card has the same product equipment code (PEC) including suffix, as the card to be removed.

At the MAP display

3 Access the PM level of the MAP display and post the outside plant module (OPM) associated with the faulty NT2X70 card by typing

`>MAPCI;MTC;PM;POST LCM site_name frame_no lcm_no`

and pressing the Enter key.

where

site_name
is the name of the site, where the OPM is located

frame_no
is the number of the frame where the LCM is located

lcm_no
is the number of the LCM module in the frame

If the NT2X70 card is in	Do
slot 25	step 4
slot 22	step 36

4 Display the P-side links of the OPM by typing

`>TRNSL P`

and pressing the Enter key.

Example of a MAP display:

```
Link    0:  RMM 0   0;  Cap MS;Status:    OK;  MsgCond:OPN
Link    1:  RMM 0   1;  Cap MS;Status:    OK;  MsgCond:OPN
Link    2:  ESA 0   0   Cap M ;Status:    OK;  MsgCond:OPN
Link    3   ESA 0   1   Cap M ;Status:    OK;  MsgCond:OPN
```

Note: In this example both the RMM and ESA modules are provisioned. However, should either of these modules not be provisioned in your office, skip the steps relating to that module and continue with the rest of the procedure.

NT2X70
in an OPM HIE (continued)

5

CAUTION
Loss of service
This procedure contains directions to busy one or more peripheral modules (PM) in a frame. Since busying a PM affects subscriber service, replace power converters only during periods of low traffic.

Busy unit 0 of the OPM by typing

>BSY UNIT 0

and pressing the Enter key.

6 Post the ESA processor identified in step 4 by typing

>POST ESA esa_no

and pressing the Enter key.

where

esa_no
is the number of the ESA processor associated with the faulty NT2X70 card.

Busy the ESA processor by typing

>BSY

and pressing the Enter key.

Example of a MAP response:

```
This action will take this PM out of service
Please confirm (“Yes” or “No”)
```

Respond to the system prompt by typing

>YES

NT2X70 in an OPM HIE (continued)

At the HIE shelf

7

WARNING
Static electricity damage
Wear a wrist strap connected to the wrist strap grounding point of a frame supervisory panel (FSP) while handling circuit cards. This protects the cards against damage caused by static electricity.

Power down the NT2X70 card in slot 25 of the HIE shelf by setting the ON/OFF switch on the power converter faceplate to the OFF position. Both the converter FAIL LED and FRAME FAIL lamp on the frame supervisory panel (FSP) will be ON. An audible alarm may sound. If an alarm does sound, silence it, at the MAP terminal, by typing

```
>SIL
```

and pressing the Enter key.

If NT2X70 is in	Dotrip circuit breaker
shelf 5 slot 25	CB1 on FSP
shelf 5 slot 22	CB4 on FSP

8 Replace the NT2X70 card in slot 25 using the common replacing a card procedure in this document. When you have completed the procedure, return to this point.

9 Power up the NT2X70 card in slot 25 of the HIE shelf as follows:

a Ensure that the converter (NT2X70) is inserted. A major audible alarm may sound. This alarm is silenced when power is restored to the converter.

b Set the POWER switch to the ON position.

If NT2X70 suffix is	Dotrip circuit breaker
AE, or AF	step 10
AA, AB, AC, or AD	step 11

10 Toggle the ON/OFF/RESET switch on the power converter faceplate to the RESET position and hold while setting the circuit breaker on the FSP to the ON position. Both the converter FAIL LED and FRAME FAIL lamp on the FSP will go OFF, release the ON/OFF/RESET switch. Go to step 12.

11 Press the RESET button on the power converter faceplate while setting the circuit breaker on the FSP to the ON position. Both the converter FAIL LED and FRAME FAIL lamp on the FSP will go OFF, release the RESET button.

NT2X70
in an OPM HIE (continued)

12 If you were directed to this procedure from another maintenance procedure, return now to the procedure that directed you here and continue as directed; otherwise, continue with step 13.

At the MAP display

13 Post the OPM associated with the faulty NT2X70 card by typing

`>POST LCM site_name frame_no lcm_no`

and pressing the Enter key.

where

site_name
is the name of the site where the OPM is located

frame_no
is the number of the frame where the LCM is located

lcm_no
is the number of the LCM module in the frame

14 Return LCM unit 0 to service by typing

`>RTS UNIT 0`

and pressing the Enter key.

If RTS	Do
passed	step 15
failed	step 73

15 Post the ESA processor associated with the faulty NT2X70 card by typing

`>POST ESA esa_no`

and pressing the Enter key.

where

esa_no
is the number of the ESA processor identified in step 4.

16 Load the ESA processor by typing

`>LOADPM`

and pressing the Enter key.

If	Do
message “loadfile not found in directory" is not received	step 17
load passed	step 33
load failed	step 37

17 Determine the type of device on which the PM load files are located.

If load files are located on	Do
tape	step 18
IOC disk	step 24
SLM disk	step 29

18 Locate the tape that contains the PM load files.

At the IOE frame

19 Mount the tape on a magnetic tape drive.

At the MAP display

20 Download the tape by typing

`>MOUNT tape_no`

and pressing the Enter key.

where

tape_no
is the number of the tape drive containing the PM load files

21 List the contents of the tape in your user directory by typing

`>LIST T tape_no`

and pressing the Enter key.

where

tape_no
is the number of the tape drive containing the PM load files.

22 Release the tape drive from your user directory by typing

`>DEMOUNT T tape_no`

and pressing the Enter key.

where

tape_no
is the number of the tape drive mounted in step 20.

23 Go to step 34.

24 From office records, determine and note the number of the input/output controller (IOC) disk and the name of the volume that contains the PM load files.

25 Access the disk utility level of the MAP by typing

`>DSKUT`

and pressing the Enter key.

NT2X70
in an OPM HIE (continued)

26 List the IOC file names into your user directory by typing

`>LISTVOL volume_name ALL`

and pressing the Enter key.

where

volume_name
is the name of the volume that contains the PM load files, obtained in step 24.

27 Leave the disk utility by typing

`>QUIT`

and pressing the Enter key.

28 Go to step 34.

29 From office records, determine and note the number of the system load module (SLM) disk and the name of the volume that contains the PM load files.

30 Access the disk utility level of the MAP by typing

`>DISKUT`

and pressing the Enter key.

31 List the SLM disk volume names by typing

`>LV CM`

and pressing the Enter key.

32 List the SLM file names into your user directory by typing

`>LF volume_name`

and pressing the Enter key.

where

volume_name
is the name of the volume that contains the PM load files, obtained in step 29.

33 Leave the disk utility by typing

`>QUIT`

and pressing the Enter key.

34 Load the LCM unit by typing

`>LOADPM`

and pressing the Enter key.

If loadpm	Do
passed	step 35
failed	step 73

NT2X70
in an OPM HIE (continued)

35 Return the LCM unit to service by typing

>RTS

and pressing the Enter key.

If RTS	Do
passed	step 69
failed	step 73

At the MAP display

36 Post the OPM associated with the faulty NT2X70 card by typing

>POST LCM site_name frame_no lcm_no

and pressing the Enter key.

where

site_name
is the name of the site where the OPM is located

frame_no
is the number of the frame where the LCM is located

lcm_no
is the number of the LCM module in the frame

37 Busy unit 1 of the OPM by typing

>BSY UNIT 1

and pressing the Enter key.

38 Post the ESA processor identified in step 4 by typing

>POST ESA esa_no

and pressing the Enter key.

where

esa_no
is the number of the ESA processor associated with the faulty NT2X70 card.

39 Busy the ESA processor by typing

>BSY

and pressing the Enter key.

Example of a MAP response:

```
This action will take this PM out of service
Please confirm (“Yes” or “No”)
```

Respond to the system prompt by typing

>YES

NT2X70 in an OPM HIE (continued)

At the HIE shelf

40

WARNING
Static electricity damage
Wear a wrist strap connected to the wrist strap grounding point of a frame supervisory panel (FSP) while handling circuit cards. This protects the cards against damage caused by static electricity.

Power down the NT2X70 card in slot 22 of the HIE shelf by setting the ON/OFF switch on the power converter faceplate to the OFF position. Both the converter FAIL LED and FRAME FAIL lamp on the frame supervisory panel (FSP) will be ON. An audible alarm may sound. If an alarm does sound, silence it by typing

>SIL

and pressing the Enter key.

If NT2X70 is in	Dotrip circuit breaker
shelf 5 slot 25	CB1 on FSP
shelf 5 slot 22	CB4 on FSP

41 Replace the NT2X70 card in slot 22 using the common replacing a card procedure in this document. When you have completed the procedure, return to this point

42 Power up the NT2X70 card in slot 22 of the HIE shelf as follows:

a Ensure that the NT2X70 card is inserted. A major audible alarm may sound. This alarm is silenced when power is restored to the converter.

b Set the POWER switch to the ON position.

If NT2X70 suffix is	Dotrip circuit breaker
AE, or AF	step 43
AA, AB, AC, or AD	step 44

43 Toggle the ON/OFF/RESET switch on the power converter faceplate to the RESET position and hold while setting the circuit breaker on the FSP to the ON position. Both the converter FAIL LED and FRAME FAIL lamp on the FSP will go OFF, release the ON/OFF/RESET switch. Go to step 45.

44 Press the RESET button on the power converter faceplate while setting the circuit breaker on the FSP to the ON position. Both the converter FAIL LED and FRAME FAIL lamp on the FSP will go OFF, release the RESET button.

NT2X70 in an OPM HIE (continued)

45 If you were directed to this procedure from another maintenance procedure, return now to the procedure that directed you here and continue as directed; otherwise, continue with step 46.

At the MAP display

46 Post the OPM associated with the faulty NT2X70 card by typing

```
>POST LCM site_name frame_no lcm_no
```

and pressing the Enter key.

where

site_name
is the name of the site where the OPM is located

frame_no
is the number of the frame where the LCM is located

lcm_no
is the number of the LCM module in the frame

47 Return LCM unit 1 to service by typing

```
>RTS UNIT  1
```

and pressing the Enter key.

If RTS	Do
passed	step 48
failed	step 73

48 Post the ESA processor associated with the faulty NT2X70 card by typing

```
>POST ESA esa_no
```

and pressing the Enter key.

where

esa_no
is the number of the ESA processor identified in step 4.

49 Load the ESA processor by typing

```
>LOADPM
```

and pressing the Enter key.

If	Do
message “loadfile not found in directory" is not received	step 50
load passed	step 68
load failed	step 73

NT2X70
in an OPM HIE (continued)

50 Determine the type of device on which the PM load files are located.

If load files are located on	Do
tape	step 51
IOC disk	step 57
SLM disk	step 62

51 Locate the tape that contains the PM load files.

At the IOE frame

52 Mount the tape on a magnetic tape drive.

At the MAP display

53 Download the tape by typing

`>MOUNT tape_no`

and pressing the Enter key.

where

tape_no
is the number of the tape drive containing the PM load files

54 List the contents of the tape in your user directory by typing

`>LIST T tape_no`

and pressing the Enter key.

where

tape_no
is the number of the tape drive containing the PM load files.

55 Release the tape drive from your user directory by typing

`>DEMOUNT T tape_no`

and pressing the Enter key.

where

tape_no
is the number of the tape drive mounted in step 53.

56 Go to step 67.

57 From office records, determine and note the number of the input/output controller (IOC) disk and the name of the volume that contains the PM load files.

58 Access the disk utility level of the MAP by typing

`>DSKUT`

and pressing the Enter key.

NT2X70
in an OPM HIE (continued)

59 List the IOC file names into your user directory by typing

`>LISTVOL volume_name ALL`

and pressing the Enter key.

where

volume_name
is the name of the volume that contains the PM load files, obtained in step 57.

60 Leave the disk utility by typing

`>QUIT`

and pressing the Enter key.

61 Go to step 67.

62 From office records, determine and note the number of the system load module (SLM) disk and the name of the volume that contains the PM load files.

63 Access the disk utility level of the MAP by typing

`>DISKUT`

and pressing the Enter key.

64 List the SLM disk volume names by typing

`>LV CM`

and pressing the Enter key.

65 List the SLM file names into your user directory by typing

`>LF volume_name`

and pressing the Enter key.

where

volume_name
is the name of the volume that contains the PM load files, obtained in step 62.

66 Leave the disk utility by typing

`>QUIT`

and pressing the Enter key.

67 Load the LCM unit by typing

`>LOADPM`

and pressing the Enter key.

If loadpm	Do
passed	step 68
failed	step 73

NT2X70 in an OPM HIE (end)

68 Return the ESA processor to service by typing

>RTS

and pressing the Enter key.

If RTS	Do
passed	step 69
failed	step 73

69 Send any faulty cards for repair according to local procedure.

70 Record the following items in office records:

- date the card was replaced
- serial number of the card
- symptoms that prompted replacement of the card.

71 Go to step 74.

72 Return to the procedure that directed you to this card replacement procedure. If necessary, go to the point where the faulty card list was produced, identify the next faulty card on the list, and go to the appropriate replacement procedure in this manual for that card.

73 Obtain further assistance in replacing this card by contacting personnel responsible for higher level of support.

74 You have successfully completed this procedure. Return to the maintenance procedure that directed you to this card replacement procedure and continue as directed.

NT2X70 in an RLCM-EDC HIE

Application

Use this procedure to replace the following card in the shelves or frames that appear in the following table.

PEC	Suffixes	Card name	Shelf/frame name
NT2X70	AF	Power Converter (5V/12V)	HIE/RLCC

For the card to replace, refer to the index for a list of cards, shelves, and frames if you cannot identify:

- the PEC
- the suffix
- the shelf or frame

Use the index documented in this maintenance manual.

Common procedures

This procedure references the common replacing a card procedure.

Action

The following flowchart is only a summary of the procedure. To replace the card, use the instructions in the step-action procedure that follows the flowchart.

NT2X70 in an RLCM-EDC HIE (continued)

Summary of replacing an NT2X70 card in HIE shelf

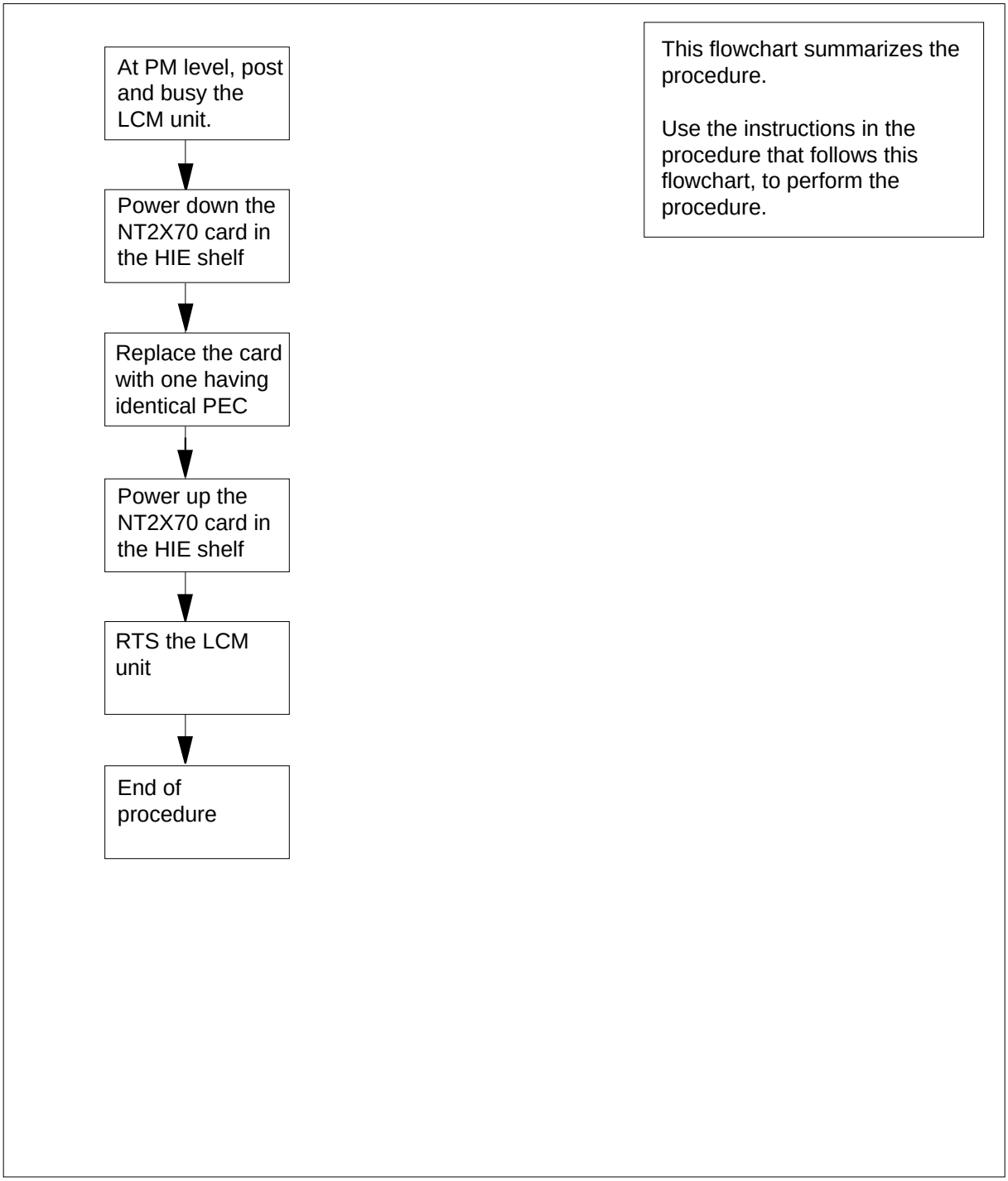

NT2X70 in an RLCM-EDC HIE (continued)

Replacing an NT2X70 card in HIE shelf,

At your current location

1 Proceed to step 2 if one of the following conditions applies:

- another maintenance procedure directed you to this card replacement procedure
- you use the procedure to verify or accept cards
- your maintenance support group directed you to this procedure

2 Obtain a replacement card. Make sure that the replacement card has the same product equipment code (PEC), including suffix, as the card you remove.

At the MAP display

3 To access the peripheral module (PM) level of the MAP display and post the Remote Line Concentrating Module with Extended Distance Capability (RLCM-EDC) associated with the defective NT2X70 card, type:

```
>MAPCI;MTC;PM;POST LCM site cabinet lcm
```

and press the Enter key.

where

site
is the name of the site where the RLCM-EDC is

cabinet
is the number of the cabinet where the LCM is

lcm
is the number of the LCM module in the cabinet

If the NT2X70 card	Do
is in slot 25	step 4
is in slot 22	step 30

4 To display the P-side links of the RLCM, type

```
>TRNSL P
```

and press the Enter key.

Example of a MAP display:

```
Link    0:  RMM 0   0;  Cap MS;Status:    OK;  MsgCond:OPN
Link    1:  RMM 0   1;  Cap MS;Status:    OK;  MsgCond:OPN
```

NT2X70
in an RLCM-EDC HIE (continued)

5

CAUTION
Loss of service
This procedure contains directions to busy one or more peripheral modules (PM) in a frame. When you busy a PM, subscriber service is affected. Replace power converters only during periods of low traffic.

To busy unit 0 of the RLCM-EDC, type

>BSY UNIT 0

and press the Enter key.

At the HIE shelf

6

WARNING
Static electricity damage
Wear a wrist strap that connects to the wrist strap grounding point of a frame supervisory panel (FSP) when you handle circuit cards. This action protects the cards against static electricity damage.

To power down the NT2X70 card in slot 25 of the HIE shelf, set the ON/OFF switch on the power converter faceplate to the OFF position. Both the converter FAIL LED and FRAME FAIL lamp on the frame supervisory panel (FSP) are ON. An audible alarm can sound. If an alarm sounds, silence the alarm at the MAP terminal. To silence the alarm, type

>SIL

and press the Enter key.

If NT2X70 is in	Dotrip circuit breaker
shelf 33 slot 25	CB3 on FSP
shelf 33 slot 22	CB8 on FSP

7 To replace the NT2X70 card in slot 25 use the common replacing a card procedure in this document. When you complete the procedure, return to this point.

8 To power-up the NT2X70 card in slot 25, toggle the ON/OFF/RESET switch on the power converter faceplate to the RESET position. Hold the position while you set the circuit breaker on the FSP to the ON position. Both the converter FAIL LED and FRAME FAIL lamp on the FSP will go OFF; release the ON/OFF/RESET switch. Proceed to step 9.

9 If another maintenance procedure directed you to this procedure, return to that procedure and continue as directed. If this action did not occur, proceed to step 10.

At the MAP display

10 To load LCM unit 0, type

`>LOADPM UNIT 0 CC`

and press the Enter key.

If	Do
you did not receive message "loadfile not found in directory"	step 11
load passed	step 29
load failed	step 39

11 Determine the type of device that contains the PM load files.

If load files	Do
are on tape	step 12
are on IOC disk	step 18
are on SLM disk	step 23

12 Locate the tape that contains the PM load files.

At the IOE frame

13 Mount the tape on a magnetic tape drive.

At the MAP display

14 To download the tape, type

`>MOUNT tape_no`

and press the Enter key.

where

tape_no
is the number of the tape drive that contains the PM load files

15 To list the contents of the tape in your user directory, type

`>LIST T tape_no`

and press the Enter key.

where

NT2X70
in an RLCM-EDC HIE (continued)

tape_no
is the number of the tape drive that contains the PM load files

16 To release the tape drive from your user directory, type

>DEMOUNT T tape_no

and press the Enter key.

where

tape_no
is the number of the tape drive mounted in step 14

17 Go to step 28.

18 From office records, determine and note the number of the input/output controller (IOC) disk. Determine the name of the volume that contains the PM load files.

19 To access the disk utility level of the MAP, type

>DSKUT

and press the Enter key.

20 To list the IOC file names into your user directory, type

>LISTVOL volume_name ALL

and press the Enter key.

where

volume_name
is the name of the volume that contains the PM load files,

obtained in step 18

21 To leave the disk utility, type

>QUIT

and press the Enter key.

22 Go to step 28.

23 From office records, determine and note the number of the system load module (SLM) disk. Determine the name of the volume that contains the PM load files.

24 Access the disk utility level of the MAP, type

>DISKUT

and press the Enter key.

25 To list the SLM disk volume names, type

>LV CM

and press the Enter key.

26 To list the SLM file names into your user directory, type

>LF volume_name

and press the Enter key.

where

volume_name
is the name of the volume that contains the PM load files,

obtained in step 23

27 To leave the disk utility, type

>QUIT

and press the Enter key.

28 To load LCM unit 0, type

>LOADPM UNIT 0 CC

and press the Enter key.

If the LOADPM	Do
passes	step 29
fails	step 39

29 To return the LCM unit to service, type

>RTS UNIT 0

and press the Enter key.

If RTS	Do
passes	step 36
fails	step 39

At the MAP display

30 To busy unit 1 of the RLCM-EDC, type

>BSY UNIT 1

and press the Enter key.

NT2X70 in an RLCM-EDC HIE (continued)

At the HIE shelf

31

WARNING
Static electricity damage
Wear a wrist strap that connects to the wrist strap grounding point of a frame supervisory panel (FSP) when you handle circuit cards. This action protects the cards against static electricity damage.

Power down the NT2X70 card in slot 22 of the HIE shelf. To power down the card, set the ON/OFF switch on the power converter faceplate to OFF. Both the converter FAIL LED and FRAME FAIL lamp on the frame supervisory panel (FSP) will be ON. An audible alarm can sound. If an alarm sounds, silence it. To silence the alarm, type

>SIL

and press the Enter key.

If NT2X70 is in	Dotrip circuit breaker
shelf 33 slot 25	CB3 on FSP
shelf 33 slot 22	CB8 on FSP

32 To replace the NT2X70 card in slot 22 use the common replacing a card procedure in this document. Complete the procedure and return to this point.

33 To power-up the NT2X70 card in slot 22, toggle the ON/OFF/RESET switch on the power converter faceplate to the RESET position. Hold the position while you set the circuit breaker on the FSP to the ON position. Both the converter FAIL LED and FRAME FAIL lamp on the FSP will go OFF. Release the ON/OFF/RESET switch. Proceed to step 34.

34 If another maintenance procedure directed you to this procedure, return to that procedure and continue as directed. If this action does not occur, proceed to step 35.

At the MAP display

35 To return the LCM unit to service, type

>RTS

and press the Enter key.

If RTS	Do
passes	step 36
fails	step 39

36 Send any defective cards for repair according to local procedure.

NT2X70 in an RLCM-EDC HIE (end)

37 Record the items that follow in office records:

- date that card replacement occurs
- serial number of the card
- problems that prompts replacement of the card

38 Proceed to step 40.

39 For additional help to replace this card, contact the next level of support.

40 The procedure is complete. Return to the maintenance procedure that directed you to this card replacement procedure and continue that procedure.

NT2X70 in an RLCM HIE

Application

Use this procedure to replace the following card in the host interface equipment (HIE) shelf.

PEC	Suffixes	Name
NT2X70	AA, AB, AC, AD, AE	Power Converter (5V/12V)

Common procedures

The common replacing a card procedure is referenced in this procedure.

Action

The following flowchart is a summary of the procedure. To replace the card, use the instructions in the procedure that follows the flowchart.

NT2X70 in an RLCM HIE (continued)

Summary of card replacement procedure for an NT2X70 card in an HIE shelf

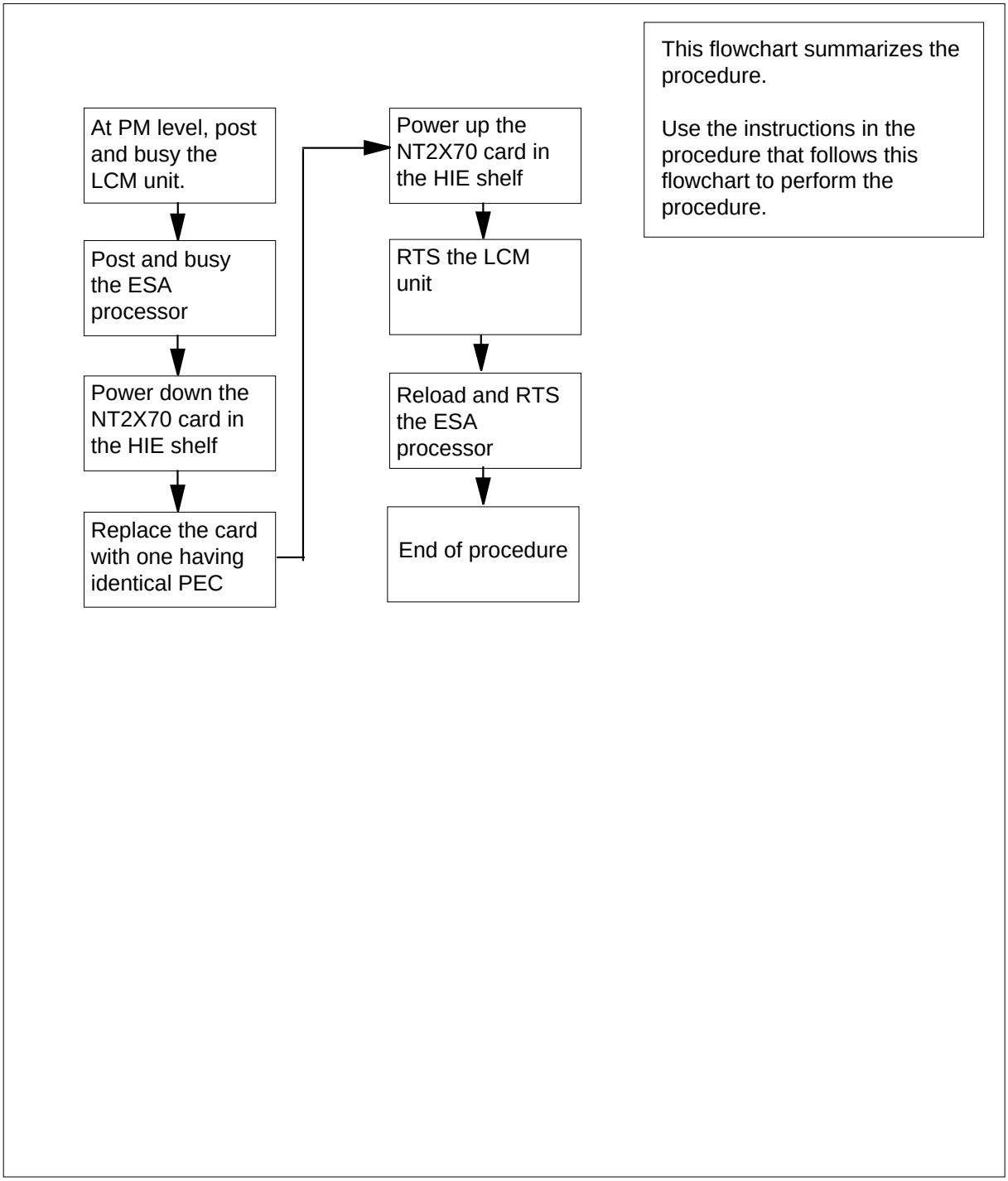

NT2X70 in an RLCM HIE (continued)

Replacing an NT2X70 card in an HIE shelf

At your current location

1 Proceed only if you were either directed to this card replacement procedure from a step in a maintenance procedure, are using the procedure to verify or accept cards, or were directed to this procedure by your maintenance support group.

2 Obtain a replacement card. Ensure that the replacement card has the same product equipment code (PEC) including suffix, as the card to be removed.

At the MAP display

3 Access the PM level of the MAP display and post the remote line concentrating module (RLCM) associated with the faulty NT2X70 card by typing

`>MAPCI;MTC;PM;POST LCM site_name frame_no lcm_no`

and pressing the Enter key.

where

site_name
is the name of the site, where the RLCM is located

frame_no
is the number of the frame where the LCM is located

lcm_no
is the number of the LCM module in the frame

If the NT2X70 card is in	Do
slot 25	step 4
slot 22	step 37

4 Display the P-side links of the RLCM by typing

`>TRNSL P`

and pressing the Enter key.

Example of a MAP display:

```
Link    0:  RMM 0   0;  Cap MS;Status:    OK;  MsgCond:OPN
Link    1:  RMM 0   1;  Cap MS;Status:    OK;  MsgCond:OPN
Link    2:  ESA 0   0   Cap M ;Status:    OK;  MsgCond:OPN
Link    3   ESA 0   1   Cap M ;Status:    OK;  MsgCond:OPN
```

Note: In this example both the RMM and ESA modules are provisioned. However, should either of these modules not be provisioned in your office, skip the steps relating to that module and continue with the rest of the procedure.

NT2X70
in an RLCM HIE (continued)

5

CAUTION
Loss of service
This procedure contains directions to busy one or more peripheral modules (PM) in a frame. Since busying a PM affects subscriber service, replace power converters only during periods of low traffic

Busy unit 0 of the RLCM by typing

>BSY UNIT 0

and pressing the Enter key.

6 Post the ESA processor identified in step 4 by typing

>POST ESA esa_no

and pressing the Enter key.

where

esa_no
is the number of the ESA processor associated with the faulty NT2X70 card.

Busy the ESA processor by typing

>BSY

and pressing the Enter key.

Example of a MAP response:

```
This action will take this PM out of service
Please confirm (“Yes” or “No”)
```

Respond to the system prompt by typing

>YES

NT2X70 in an RLCM HIE (continued)

At the HIE shelf

7

WARNING
Static electricity damage
Wear a wrist strap connected to the wrist strap grounding point of a frame supervisory panel (FSP) while handling circuit cards. This protects the cards against damage caused by static electricity.

Power down the NT2X70 card in slot 25 of the HIE shelf by setting the ON/OFF switch on the power converter faceplate to the OFF position. Both the converter FAIL LED and FRAME FAIL lamp on the frame supervisory panel (FSP) will be ON. An audible alarm may sound. If an alarm does sound, silence it, at the MAP terminal, by typing

```
>SIL
```

and pressing the Enter key.

If NT2X70 is in	Do trip circuit breaker
shelf 38 slot 25	CB1 on FSP
shelf 38 slot 22	CB4 on FSP

8 For the NTNX14AA cabinet the circuit breaker assignments are:

If NTNX14AA cabinet	Do trip circuit breaker
shelf 33 slot 25	CB3 on FSB
shelf 33 slot 22	CB8 on FSB

9 Replace the NT2X70 card in slot 25 using the common replacing a card procedure in this document. When you have completed the procedure, return to this point

10 Power up the NT2X70 card in slot 25 of the HIE shelf as follows:

a Ensure that the converter (NT2X70) is inserted. A major audible alarm may sound. This alarm is silenced when power is restored to the converter.

b Set the POWER switch to the ON position.

If NT2X70 suffix is	Dotrip circuit breaker
AE	step 11
AA, AB, AC, or AD	step 12

NT2X70
in an RLCM HIE (continued)

11 Toggle the ON/OFF/RESET switch on the power converter faceplate to the RESET position and hold while setting the circuit breaker on the FSP to the ON position. Both the converter FAIL LED and FRAME FAIL lamp on the FSP will go OFF, release the ON/OFF/RESET switch. Go to step 13.

12 Press the RESET button on the power converter faceplate while setting the circuit breaker on the FSP to the ON position. Both the converter FAIL LED and FRAME FAIL lamp on the FSP will go OFF, release the RESET button.

13 If you were directed to this procedure from another maintenance procedure, return now to the procedure that directed you here and continue as directed; otherwise, continue with step 14.

At the MAP display

14 Post the RLCM associated with the faulty NT2X70 card by typing

```
>POST LCM site_name frame_no lcm_no
```

and pressing the Enter key.

where

site_name
is the name of the site where the RLCM is located

frame_no
is the number of the frame where the LCM is located

lcm_no
is the number of the LCM module in the frame

15 Return LCM unit 0 to service by typing

```
>RTS UNIT  0
```

and pressing the Enter key.

If RTS	Do
passed	step 16
failed	step 75

16 Post the ESA processor associated with the faulty NT2X70 card by typing

```
>POST ESA esa_no
```

and pressing the Enter key.

where

esa_no
is the number of the ESA processor identified in step 4.

17 Load the ESA processor by typing

```
>LOADPM
```

NT2X70
in an RLCM HIE (continued)

and pressing the Enter key.

If	Do
message “loadfile not found in directory" is not received	step 18
load passed	step 34
load failed	step 38

18 Determine the type of device on which the PM load files are located.

If load files are located on	Do
tape	step 19
IOC disk	step 25
SLM disk	step 30

19 Locate the tape that contains the PM load files.

At the IOE frame

20 Mount the tape on a magnetic tape drive.

At the MAP display

21 Download the tape by typing

`>MOUNT tape_no`

and pressing the Enter key.

where

tape_no
is the number of the tape drive containing the PM load files

22 List the contents of the tape in your user directory by typing

`>LIST T tape_no`

and pressing the Enter key.

where

tape_no
is the number of the tape drive containing the PM load files.

23 Release the tape drive from your user directory by typing

`>DEMOUNT T tape_no`

and pressing the Enter key.

where

tape_no
is the number of the tape drive mounted in step 21.

24 Go to step 35.

25 From office records, determine and note the number of the input/output controller (IOC) disk and the name of the volume that contains the PM load files.

26 Access the disk utility level of the MAP by typing

```
>DSKUT
```

and pressing the Enter key.

27 List the IOC file names into your user directory by typing

```
>LISTVOL volume_name ALL
```

and pressing the Enter key.

where

volume_name
is the name of the volume that contains the PM load files, obtained in step 25.

28 Leave the disk utility by typing

```
>QUIT
```

and pressing the Enter key.

29 Go to step 35.

30 From office records, determine and note the number of the system load module (SLM) disk and the name of the volume that contains the PM load files.

31 Access the disk utility level of the MAP by typing

```
>DISKUT
```

and pressing the Enter key.

32 List the SLM disk volume names by typing

```
>LV CM
```

and pressing the Enter key.

33 List the SLM file names into your user directory by typing

```
>LF volume_name
```

and pressing the Enter key.

where

volume_name
is the name of the volume that contains the PM load files, obtained in step 30.

34 Leave the disk utility by typing

```
>QUIT
```

and pressing the Enter key.

NT2X70
in an RLCM HIE (continued)

35 Load the LCM unit by typing

>LOADPM

and pressing the Enter key.

If loadpm	Do
passed	step 36
failed	step 75

36 Return the LCM unit to service by typing

>RTS

and pressing the Enter key.

If RTS	Do
passed	step 71
failed	step 75

At the MAP display

37 Post the remote line concentrating module (RLCM) associated with the faulty NT2X70 card by typing

>POST LCM site_name frame_no lcm_no

and pressing the Enter key.

where

site_name
is the name of the site where the RLCM is located

frame_no
is the number of the frame where the LCM is located

lcm_no
is the number of the LCM module in the frame

38 Busy unit 1 of the RLCM by typing

>BSY UNIT 1

and pressing the Enter key.

39 Post the ESA processor identified in step 4 by typing

>POST ESA esa_no

and pressing the Enter key.

where

esa_no
is the number of the ESA processor associated with the faulty NT2X70 card.

NT2X70
in an RLCM HIE (continued)

40 Busy the ESA processor by typing

>BSY

and pressing the Enter key.

Example of a MAP response:

```
This action will take this PM out of service
Please confirm ("Yes" or "No")
```

Respond to the system prompt by typing

>YES

At the HIE shelf

41

WARNING
Static electricity damage
Wear a wrist strap connected to the wrist strap grounding point of a frame supervisory panel (FSP) while handling circuit cards. This protects the cards against damage caused by static electricity.

Power down the NT2X70 card in slot 22 of the HIE shelf by setting the ON/OFF switch on the power converter faceplate to the OFF position. Both the converter FAIL LED and FRAME FAIL lamp on the frame supervisory panel (FSP) will be ON. An audible alarm may sound. If an alarm does sound, silence it by typing

>SIL

and pressing the Enter key.

If NT2X70 is in	Do trip circuit breaker
shelf 38 slot 25	CB1 on FSP
shelf 38 slot 22	CB4 on FSP

42 For the NTNX14AA cabinet the circuit breaker assignments are:

If NTNX14AA cabinet	Do trip circuit breaker
shelf 33 slot 25	CB3 on FSP
shelf 33 slot 22	CB8 on FSB

43 Replace the NT2X70 card in slot 22 using the common replacing a card procedure in this document. When you have completed the procedure, return to this point

NT2X70
in an RLCM HIE (continued)

44 Power up the NT2X70 card in slot 22 of the HIE shelf as follows:

a Ensure that the NT2X70 card is inserted. A major audible alarm may sound. This alarm is silenced when power is restored to the converter.

b Set the POWER switch to the ON position.

If NT2X70 suffix is	Dotrip circuit breaker
AE	step 45
AA, AB, AC, or AD	step 46

45 Toggle the ON/OFF/RESET switch on the power converter faceplate to the RESET position and hold while setting the circuit breaker on the FSP to the ON position. Both the converter FAIL LED and FRAME FAIL lamp on the FSP will go OFF, release the ON/OFF/RESET switch. Go to step 47.

46 Press the RESET button on the power converter faceplate while setting the circuit breaker on the FSP to the ON position. Both the converter FAIL LED and FRAME FAIL lamp on the FSP will go OFF, release the RESET button.

47 If you were directed to this procedure from another maintenance procedure, return now to the procedure that directed you here and continue as directed; otherwise, continue with step 48.

At the MAP display

48 Post the RLCM associated with the faulty NT2X70 card by typing

```
>POST LCM site_name frame_no lcm_no
```

and pressing the Enter key.

where

site_name
is the name of the site where the RLCM is located

frame_no
is the number of the frame where the LCM is located

lcm_no
is the number of the LCM module in the frame

49 Return LCM unit 1 to service by typing

```
>RTS UNIT  1
```

and pressing the Enter key.

If RTS	Do
passed	step 50
failed	step 75

50 Post the ESA processor associated with the faulty NT2X70 card by typing

```
>POST ESA esa_no
```

and pressing the Enter key.

where

esa_no
is the number of the ESA processor identified in step 4.

51 Load the ESA processor by typing

>LOADPM

and pressing the Enter key.

If	Do
message “loadfile not found in directory" is not received	step 52
load passed	step 70
load failed	step 75

52 Determine the type of device on which the PM load files are located.

If load files are located on	Do
tape	step 53
IOC disk	step 59
SLM disk	step 64

53 Locate the tape that contains the PM load files.

At the IOE frame

54 Mount the tape on a magnetic tape drive.

At the MAP display

55 Download the tape by typing

>MOUNT tape_no

and pressing the Enter key.

where

tape_no
is the number of the tape drive containing the PM load files

56 List the contents of the tape in your user directory by typing

>LIST T tape_no

and pressing the Enter key.

where

NT2X70
in an RLCM HIE (continued)

tape_no
is the number of the tape drive containing the PM load files.

57 Release the tape drive from your user directory by typing

`>DEMOUNT T tape_no`

and pressing the Enter key.

where

tape_no
is the number of the tape drive mounted in step 55.

58 Go to step 69.

59 From office records, determine and note the number of the input/output controller (IOC) disk and the name of the volume that contains the PM load files.

60 Access the disk utility level of the MAP by typing

`>DSKUT`

and pressing the Enter key.

61 List the IOC file names into your user directory by typing

`>LISTVOL volume_name ALL`

and pressing the Enter key.

where

volume_name
is the name of the volume that contains the PM load files, obtained in step 59.

62 Leave the disk utility by typing

`>QUIT`

and pressing the Enter key.

63 Go to step 69.

64 From office records, determine and note the number of the system load module (SLM) disk and the name of the volume that contains the PM load files.

65 Access the disk utility level of the MAP by typing

`>DISKUT`

and pressing the Enter key.

66 List the SLM disk volume names by typing

`>LV CM`

and pressing the Enter key.

67 List the SLM file names into your user directory by typing

`>LF volume_name`

and pressing the Enter key.

where

volume_name
is the name of the volume that contains the PM load files, obtained in step 64.

68 Leave the disk utility by typing

>QUIT

and pressing the Enter key.

69 Load the LCM unit by typing

>LOADPM

and pressing the Enter key.

If loadpm	Do
passed	step 70
failed	step 75

70 Return the ESA processor to service by typing

>RTS

and pressing the Enter key.

If RTS	Do
passed	step 71
failed	step 75

71 Send any faulty cards for repair according to local procedure.

72 Record the following items in office records:

- date the card was replaced
- serial number of the card
- symptoms that prompted replacement of the card.

73 Go to step 76.

74 Return to the procedure that directed you to this card replacement procedure. If necessary, go to the point where the faulty card list was produced, identify the next faulty card on the list, and go to the appropriate replacement procedure in this manual for that card.

75 Obtain further assistance in replacing this card by contacting personnel responsible for higher level of support.

76 You have successfully completed this procedure. Return to the maintenance procedure that directed you to this card replacement procedure and continue as directed.

NT2X70 in an RSC

Application

Use this procedure to replace the following card in an RSC RCC.

PEC	Suffixes	Name
NT2X70	AD, AE, AF	Power converter

Common Procedures

None

Action

The following flowchart is a summary of the procedure. To replace the card, use the instructions in the procedure that follows the flowchart.

NT2X70 in an RSC (continued)

Summary of card replacement procedure for an NT2X70 card in RSC RCC

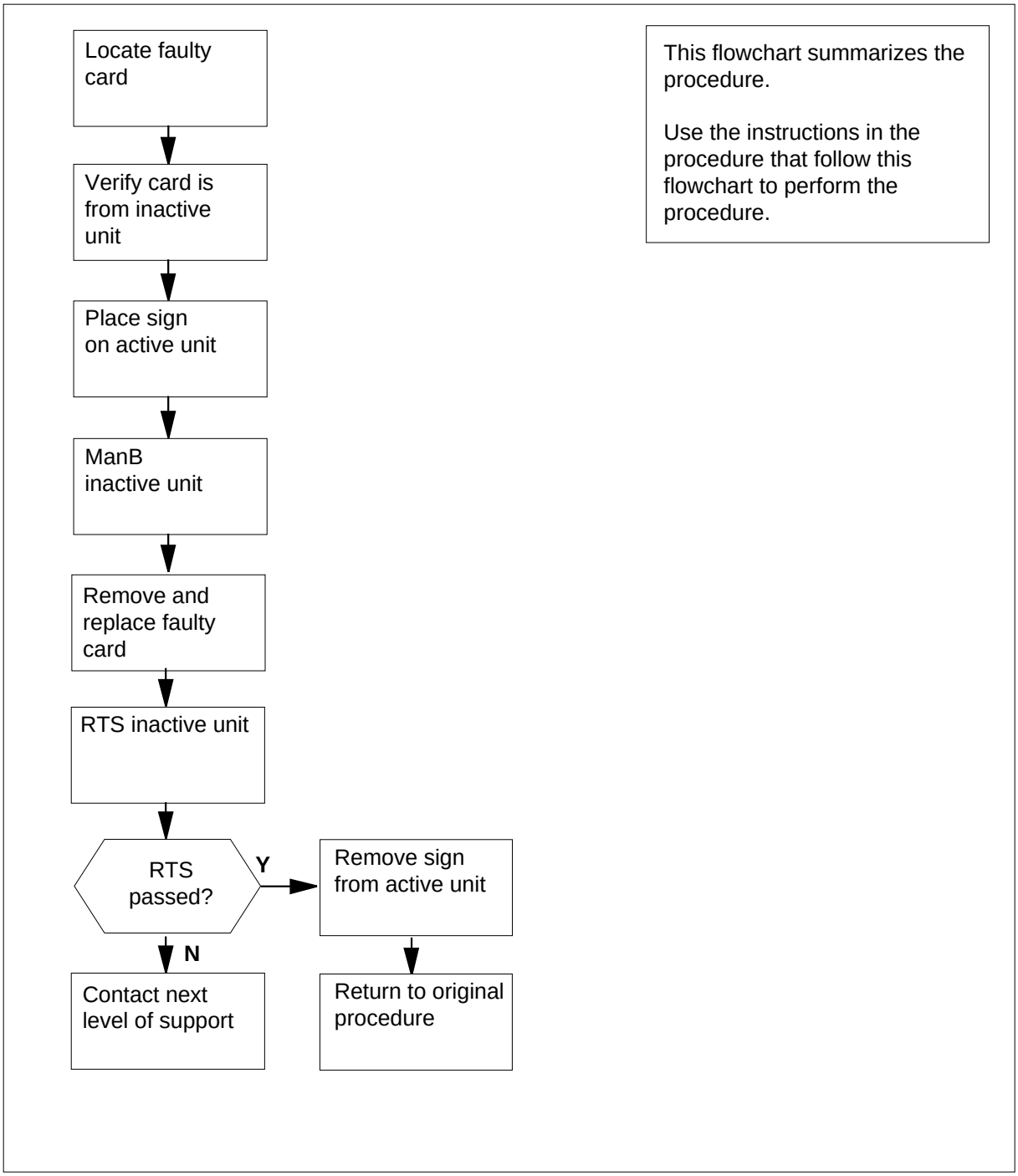

NT2X70 in an RSC (continued)

Replacing an NT2X70 card in an RSC RCC

At your current location

1 Proceed only if you were either directed to this card replacement procedure from a step in a maintenance procedure, are using the procedure to verify or accept cards, or were directed to this procedure by your maintenance support group.

2

CAUTION
Loss of service
When replacing a card in the RCC, ensure the unit where you are replacing the card is INACTIVE and the mate unit is ACTIVE.

Obtain a replacement card. Ensure the replacement card has the same product equipment code (PEC) including suffix, as the card to be removed.

At the MAP display

3 To access the PM level and post the RCC, type

`>MAPCI;MTC;PM;POST RCC rcc_no`

and press the Enter key.

where

rcc_no
is the number of the RCC unit being posted (0-255)

Example of a MAP display:

```
   CM    MS   IOD   Net    PM    CCS    LNS    Trks    Ext    APPL
    .     .     .     .   1RCC    .      .       .       .       .

 RCC              SysB     ManB     OffL     CBsy     ISTb      InSv
 0 Quit     PM     0        0        2        0        2         25
 2 Post_    RCC    0        0        0        0        1          1
 3 ListSet
 4                RCC      0 ISTb  Links_OOS:  CSide  0,  PSide   0
 5 TRNSL_         Unit 0:  Inact SysB
 6 TST_           Unit 1:   Act  InSv
 7 BSY_
 8 RTS_
 9 OffL
10 LoadPM_
11 Disp_
12 Next_
13 SwAct
14 QueryPM
15
16 IRLINK
17 Perform
18
```

4 By observing the MAP display, be sure the card is to be removed is on the inactive unit.

If the faulty card is on an	Do
ACTIVE unit	step 5
INACTIVE unit	step 8

5 To switch the processing activity to the inactive unit, type

>SWACT

and press the Enter key.

The system determines the type of SwAct it can perform and displays a confirmation prompt for the selected SwAct.

If SWACT	Do
can continue at this time	step 6
cannot continue at this time	step 25

6 To switch the activity of the unit, type

>YES

and press the Enter key.

NT2X70 in an RSC (continued)

The system runs a pre-SwAct audit to determine the ability of the inactive unit to accept activity reliably.

Note: A maintenance flag appears when maintenance tasks are in progress. Wait until the flag disappears before proceeding with the next maintenance action.

If the message is	Do
SwAct passed	step 8
SWACT failed	step 7
SwAct failed Reason: XPM SwAct back	step 7
SwAct refused by SwAct controller	step 7

7 Return to the alarm clearing procedure that directed you to this card replacement procedure and clear the alarm condition on the inactive unit. When the alarm is cleared, return to step 1 of this card replacement procedure.

At the RCE frame

8 Put a sign on the ACTIVE unit bearing the words *Active unit—Do not touch*.

At the MAP display

9 To busy the inactive RCC unit, type

>BSY INACTIVE

and press the Enter key.

10 To reset the inactive PM unit, type

>PMRESET UNIT unit_no NORUN

and press the Enter key.

where

unit_no
is the PM unit number (0 or 1)

Example of a MAP response:

```
RCC 0 Unit 0    PMReset Passed
```

NT2X70 in an RSC (continued)

At the RCE frame:

11

WARNING
Static electricity damage
Before removing any cards, put on a wrist strap and connect it to the wrist strap grounding point on the left side of the frame supervisory panel of the RCC. This protects the equipment against damage caused by static electricity.

Put on a wrist strap.

12 Power down the unit by setting the ON/OFF/RESET switch on the power converter faceplate to the OFF position. Both the converter FAIL LED and FRAME FAIL lamp on the frame supervisory panel (FSP) will be ON. An audible alarm may sound. To silence the alarm, type

```
>SIL
```

and press the Enter key.

13

DANGER
Equipment damage
Take the following precautions when removing or inserting a card:

1. Do not apply direct pressure to the components.
2. Do not force the cards into the slots.

Remove the NT2X70 power converter card as shown in the following figures.

a Locate the card to be removed on the appropriate shelf.

NT2X70
in an RSC (continued)

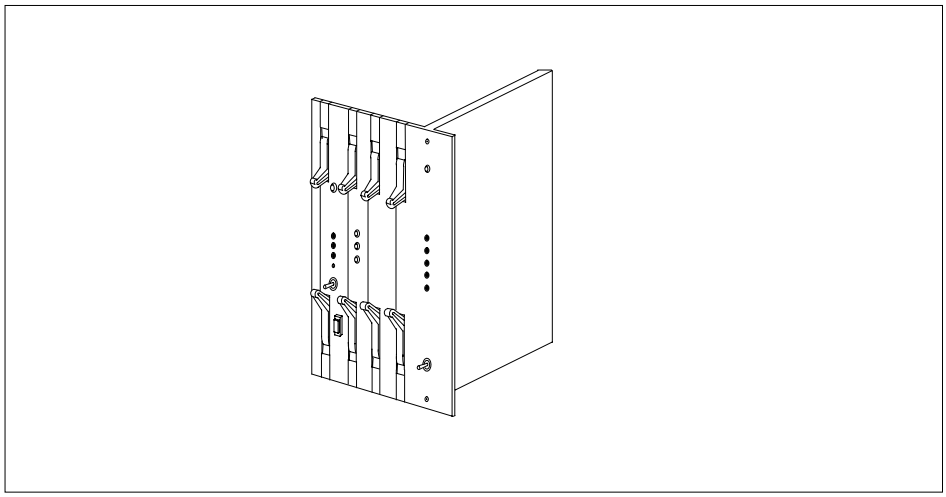

b Grasp the top and the bottom latch assemblies.

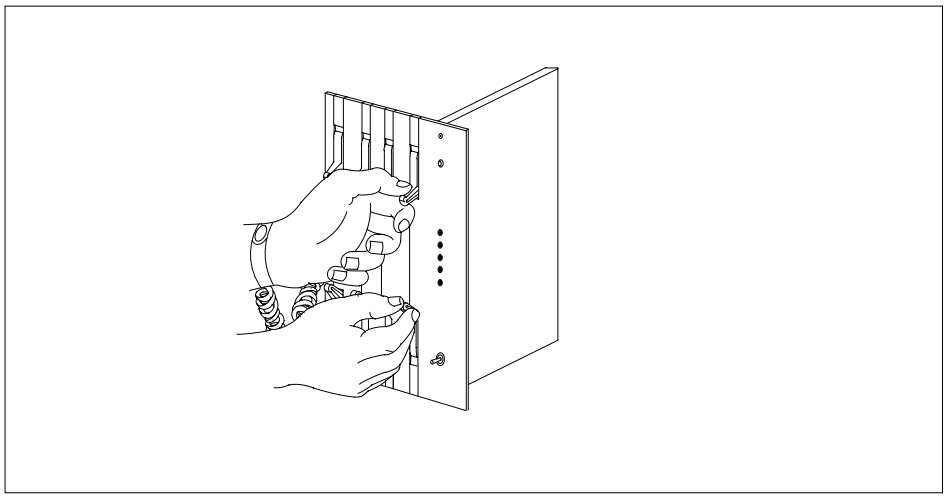

c Simultaneously rotate the top latch upward and the bottom latch downward until the latches are in the horizontal position. This will move the card 1/2 inch from the shelf backplane.

NT2X70
in an RSC (continued)

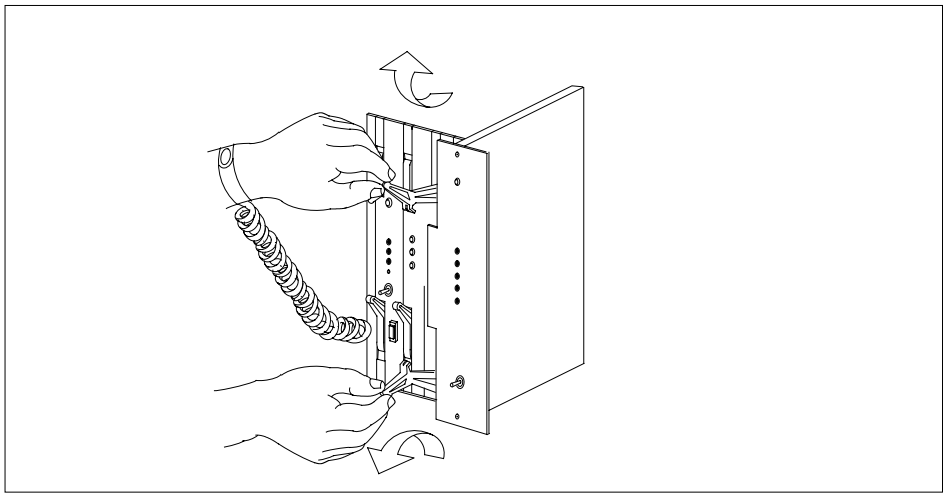

d Holding the card by the face plate, slide the card along the guides until the card is free from the shelf.

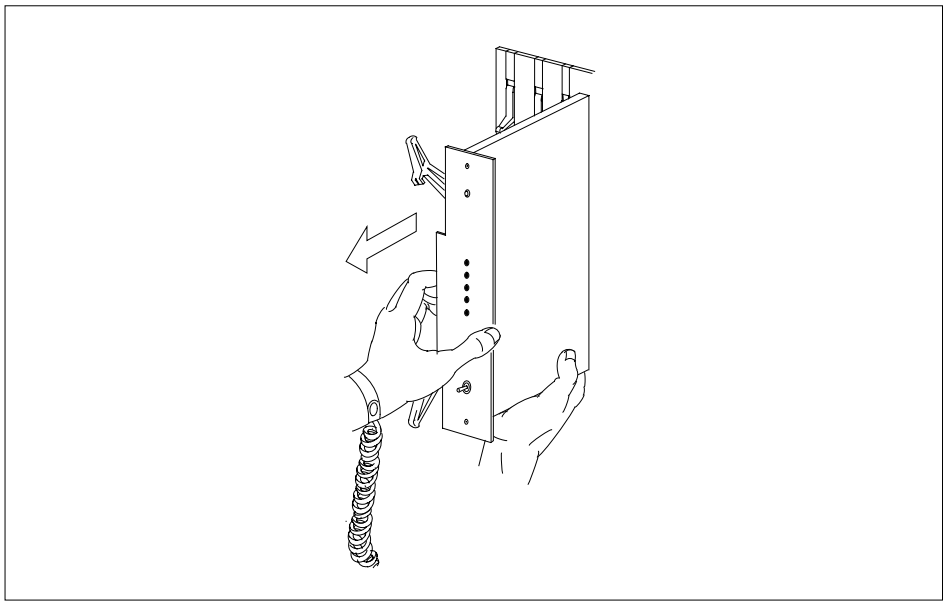

e Immediately place the card into an approved electro-static discharge (ESD) protective container.

f Ensure the replacement card has the same PEC, including suffix, as the card you just removed.

NT2X70
in an RSC (continued)

14

DANGER
Equipment damage
Take these precautions when removing or inserting a card:

1. Do not apply direct pressure to the components.
2. Do not force the cards into the slots.

Insert the NT2X70 power converter replacement card as shown in the following figures.

a Hold the card by the face plate with the components visible on the right-hand side.

b With the locking levers on the replacement card in the open position, place the back edge of the card into the upper and lower guides of the desired slot position on the shelf.

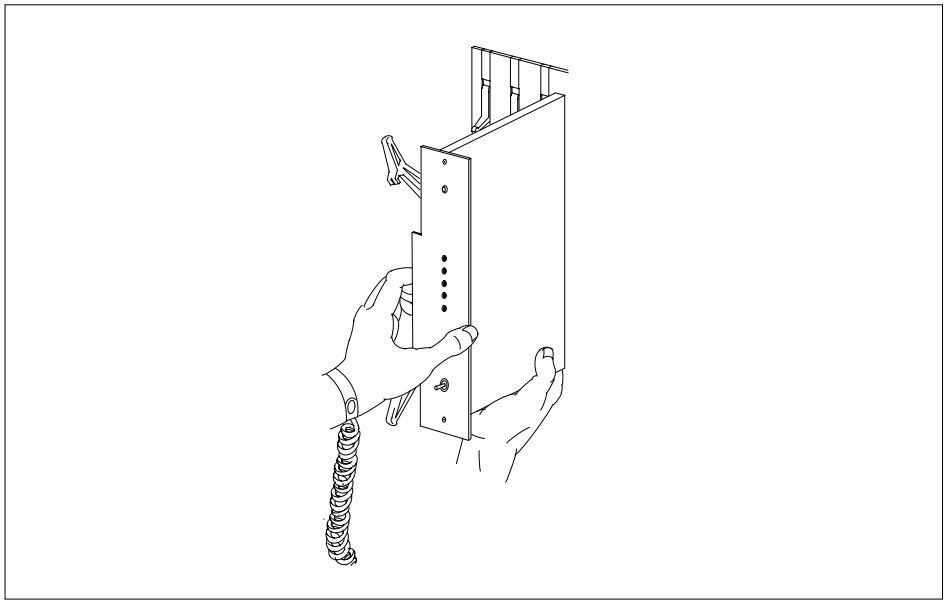

c Gently slide the card into the shelf.

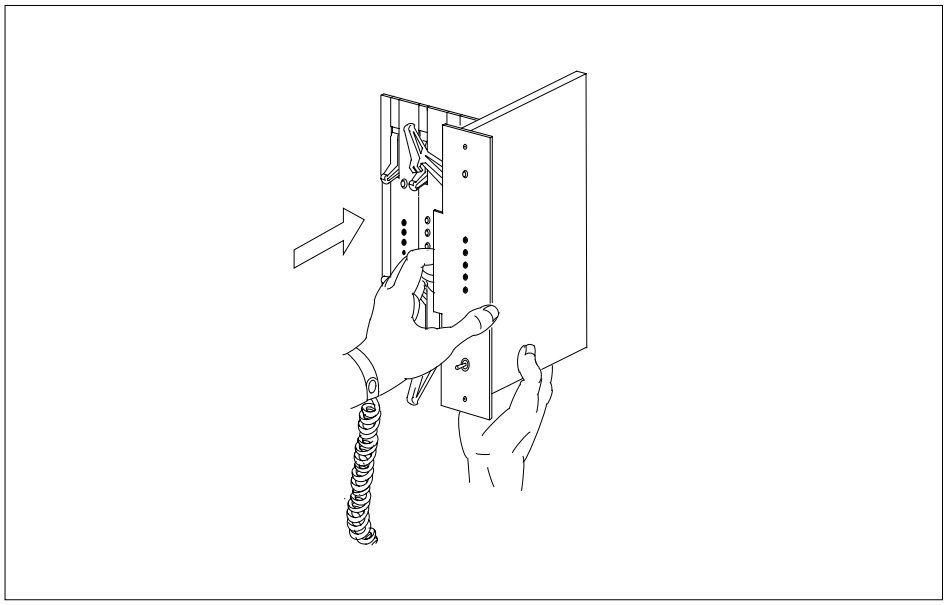

15 Seat and lock the card.

a Using your fingers or thumbs, push on the upper and lower edges of the faceplate to ensure the card is fully seated in the shelf.

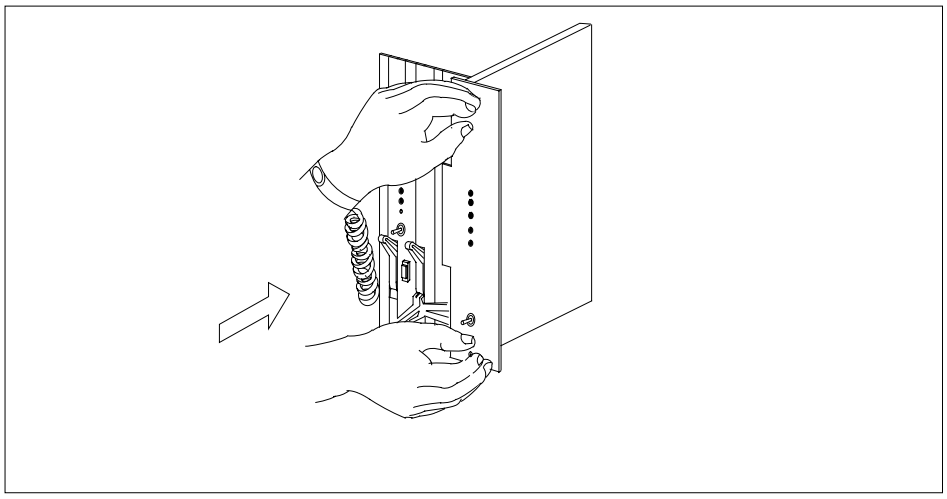

b Simultaneously rotate the top latch downward and the bottom latch upward. The card will lock into position when the lock-latches are flush with the face plate of the card.

NT2X70
in an RSC (continued)

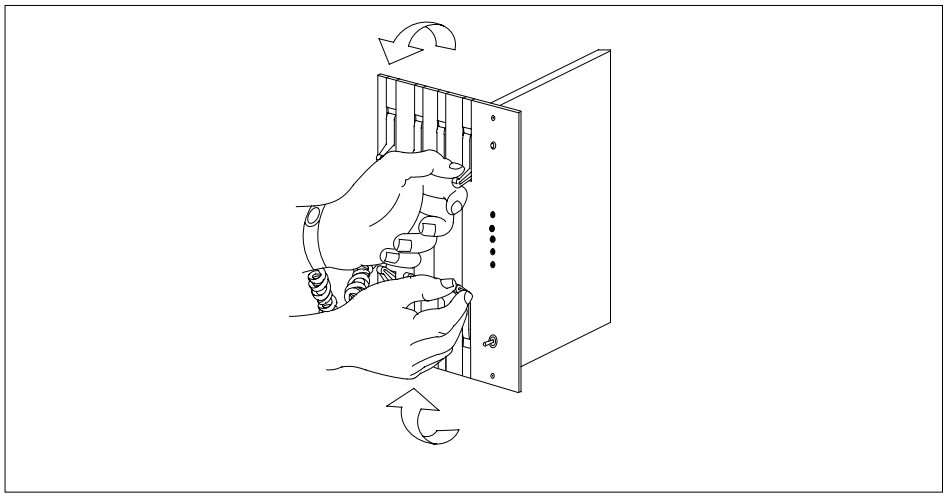

16 Power up the inactive RCC unit as follows:

a Ensure the NT2X70 power converter is inserted. A major audible alarm may sound. This alarm is silenced when power is restored to the converter.

b Set the POWER switch to the ON position.

If the NT2X70 suffix is	Do
AE or AF	step 17
AD	step 18

17 Toggle the ON/OFF/RESET switch on the power converter faceplate to the RESET position and hold while setting the circuit breaker on the FSP to the ON position. Both the converter FAIL LED and FRAME FAIL lamp on the FSP will go OFF. Release the ON/OFF/RESET switch. Go to step 19.

18 Press the RESET button on the power converter faceplate while setting the circuit breaker on the FSP to the ON position. Both the converter FAIL LED and FRAME FAIL lamp on the FSP will go OFF. Release the RESET button.

19 Use the following information to determine the next step in this procedure.

If you entered this procedure from	Do
an alarm clearing procedure	step 24
other	step 20

At the MAP display

20 After you replace the faulty card, load the inactive RCC unit. To load the inactive RCC unit, type

`>LOADPM INACTIVE`

and press the Enter key.

If load	Do
passed	step 21
failed	step 25

21 To return the INACTIVE RCC unit to service, type

`>RTS INACTIVE`

and press the Enter key.

If the RTS	Do
passed	step 22
failed	step 25

22 Send any faulty cards for repair according to local procedure.

23 Record the following items in office records:

- date the card was replaced
- serial number of the card
- symptoms that prompted replacement of the card.

Go to step 26.

24 Return to the Alarm Clearing Procedure that directed you to this card replacement procedure. If necessary, go to the point where the faulty card list was produced, identify the next faulty card on the list, and go to the appropriate replacement procedure in this manual for that card.

25 Obtain further assistance in replacing this card by contacting personnel responsible for higher level of support.

26 You have successfully completed this procedure. Return to the maintenance procedure that directed you to this card replacement procedure and continue as directed.

NT2X70 in an SMA

Application

Use this procedure to replace an NT2X70 card in an SMA.

PEC	Suffixes	Name
NT2X70	AE	Power Converter (5V/12V)

Common procedures

The following procedures are referenced in this procedure:

- “Locating a faulty card in an SMA"
- replacing a card
- unseating a card
- reseating a card
- returning a card

Do not go to the common procedures unless directed to do so in the step-action procedure.

Action

The following flowchart is only a summary of the procedure. To replace the card, use the instructions in the step-action procedure that follows the flowchart.

NT2X70 in an SMA (continued)

Summary of card replacement procedure for an NT2X70 card in an SMA

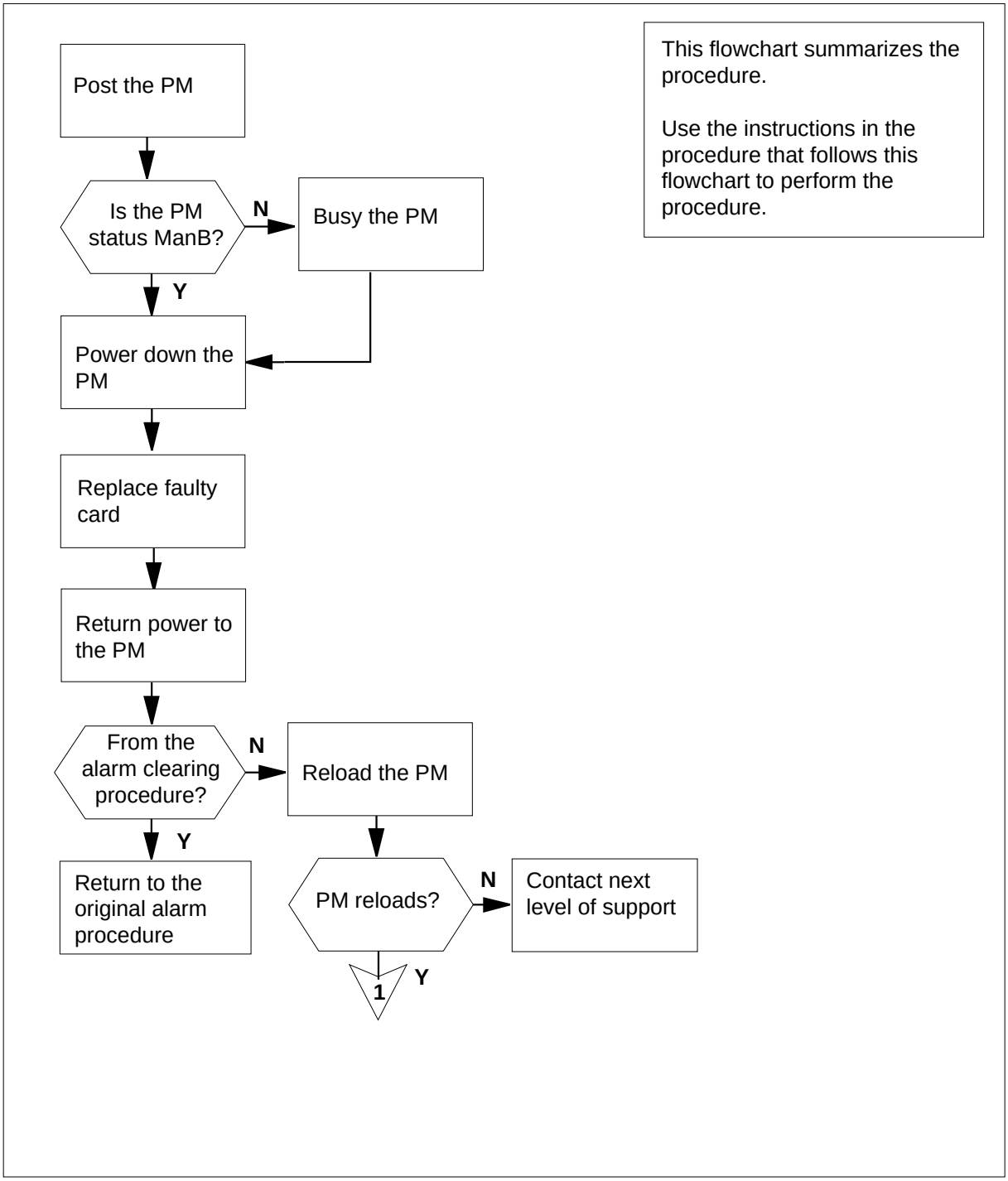

NT2X70 in an SMA (continued)

Summary of card replacement procedure for an NT2X70 card in an SMA (continued)

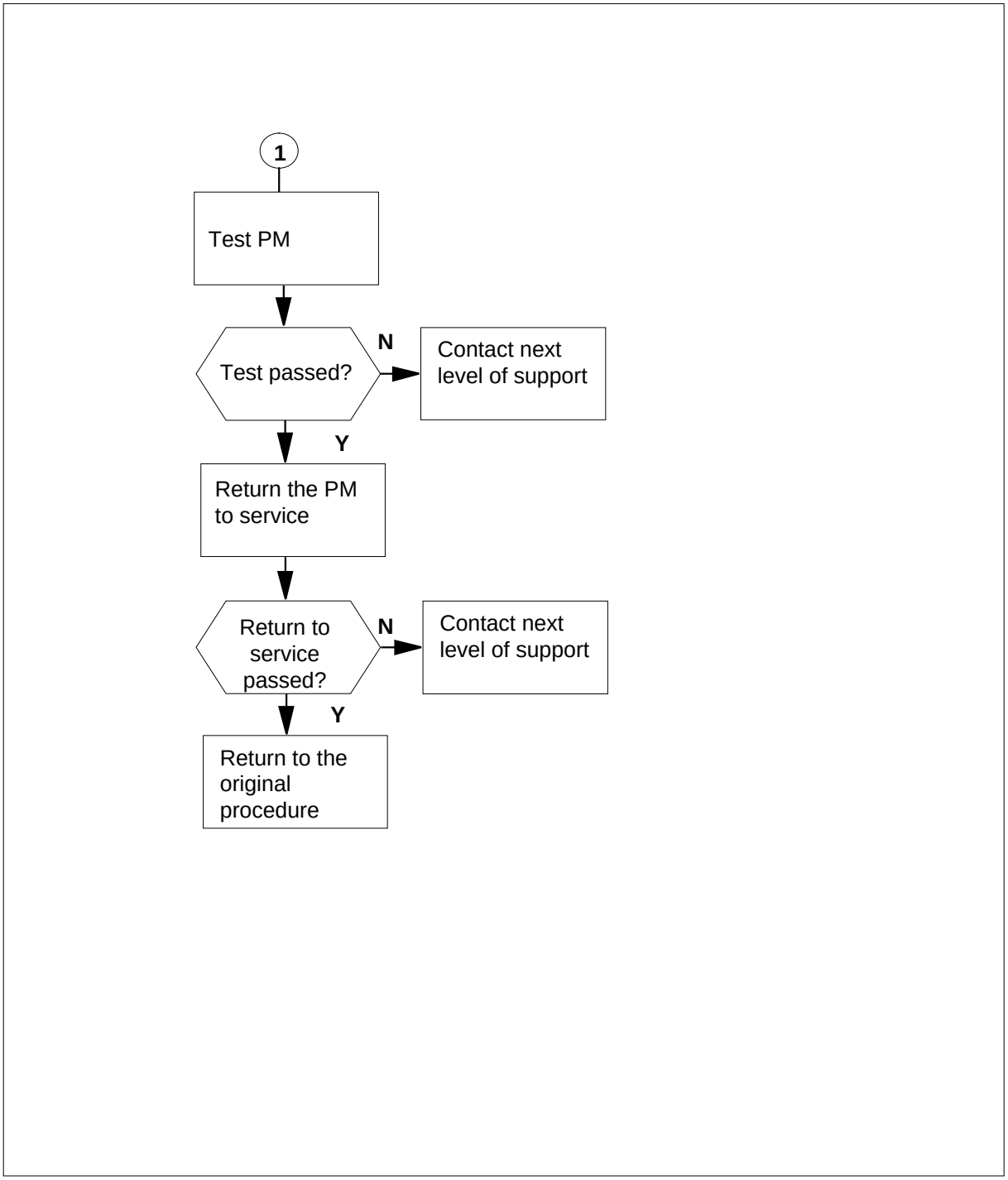

Replacing a NT2X70 card in an SMA

At your current location

1 Proceed only if you have been directed to this card replacement procedure from a step in a maintenance procedure, are using the procedure for verifying or accepting cards, or have been directed to this procedure by your maintenance support group.

2 Ensure you know the physical location of the faulty card.

If card location is	Do
known	step 4
unknown	step 3

3 Perform the common procedure “Locating a faulty card in an SMA" in this document.

4

CAUTION
Loss of service
Ensure that you replace the card in the inactive unit and the mate unit is active.

Obtain a replacement card. Ensure the replacement card has the same product engineering code (PEC), including suffix, as the card being removed.

At the MAP terminal

5 Ensure the current MAP display is at the PM level, and post the SMA by typing

```
>MAPCI;MTC;PM;POST SMA sma_no
```

and pressing the Enter key.

where

sma_no
is the number of the SMA being posted

Example of a MAP response:

NT2X70
in an SMA (continued)

```
SMA     SysB  ManB  Offl  CBsy  ISTb  InSv
    PM    3     0    1     0     2    13
    SMA   0     0    0     0     1     7

SMA 0 ISTb  Links_OOS:  CSide 0, PSide 0
Unit0:  Act   InSv
Unit1:  Inact SysB
```

6 Observe the MAP display and determine if the faulty card is in the active or the inactive unit.

If the faulty card is in the	Do
active unit	step 7
inactive unit	step 11

7 Switch the activity of the units by typing

>SWACT

and pressing the Enter key.

A confirmation prompt for the SWACT command is displayed at the MAP terminal.

If SWACT	Do
cannot continue at this time	step 8
can continue at this time	step 9

8 Reject the prompt to switch the activity of the units by typing

>NO

and pressing the Enter key.

The system discontinues the SWACT.

9 Confirm the system prompt by typing

>YES

and pressing the Enter key.

The system runs a pre-SWACT audit to determine the ability of the inactive unit to accept activity reliably.

Note: A maintenance flag appears when maintenance tasks are in progress. Wait until the flag disappears before proceeding with the next maintenance action.

If the message is	Do
SWACT passed	step 11

If the message is	Do
`SWACT failed Reason: XPM SWACTback`	step 10
`SWACT refused by SWACT Controller`	step 10

10 The inactive unit could not establish two-way communication with the central control (CC) and has switched activity back to the originally active unit. You must clear all faults on the inactive unit before attempting to clear the alarm condition on the active unit.

Go to step 25.

At the equipment frame

11 Hang a sign on the active unit bearing the words: *Active unit-Do not touch.* This sign should not be attached by magnets or tape.

At the MAP terminal

12 Observe the MAP display and determine the state of the inactive unit.

If state is	Do
`SysB, CBsy, ISTb, or InSv`	step 13
`ManB`	step 15

At the equipment frame

13 Busy the inactive PM unit by typing

`>BSY UNIT unit_no`

and pressing the Enter key.

where

unit_no
is the number of the inactive SMA unit (0 or 1)

14

WARNING
Static electricity damage
Wear a strap connected to the wrist strap grounding point on the frame supervisory panel (FSP) while handling cards. This strap protects the cards against damage caused by static electricity.

NT2X70
in an SMA (continued)

Unseat but do not remove the NT6X69 Message Interface card and the NT6X80 PCM Loss Addition card using the common unseating a card procedure in this document

15 Power down the unit by setting the ON/OFF switch on the power converter faceplate slots 25 through 27 to the OFF position.

Both the converter FAIL LED and FRAME FAIL lamps on the frame supervisory panel (FSP) turn ON. An audible alarm may sound.

If an alarm does sound, silence it by typing

```
>SIL
```

and pressing the Enter key.

16 Perform the common replacing a card procedure in this document.

17 Power up the power converter in the inactive SMA unit as follows:

a Ensure the power converter (NT2X70) is inserted. A major audible alarm may sound. This alarm is silenced when power is restored to the converter.

b Set the power switch on the power converter faceplate to the ON position.

18 Press the RESET button while setting the circuit breaker to the ON position.

Both the converter FAIL LED and FRAME FAIL lamps on the FSP turn OFF.

19 Reseat the NT6X69 Message Interface card and the NT6X80 PCM Loss Addition card using the common reseating a card procedure in this document.

20 Use the following information to determine the next step.

If you were directed here from	Do
alarm clearing procedures	step 23
other	step 21

At the MAP terminal

21 Load the inactive SMA unit by typing

```
>LOADPM UNIT unit_no
```

and pressing the Enter key.

where

unit_no
is the number of the SMA unit busied in step 13

If load	Do
passes	step 22
fails	step 25

22 Return the inactive SMA unit to service by typing

`>RTS UNIT unit_no`

and pressing the Enter key.

where

unit_no
is the number of the SMA unit tested in step 21

If RTS	Do
passes	step 23
fails	step 25

At the equipment frame

23 Remove the sign from the active SMA unit.

24 Go to the common returning a card procedure in this document.

Go to step 26.

25 For further assistance, contact the personnel responsible for the next level of support.

26 You have completed this procedure. Return to the maintenance procedure that directed you to this card replacement procedure and continue as directed.

NT2X70 in an SMA-MVI-20

Application

Use this procedure to replace an NT2X70 card in an SMA.

PEC	Suffixes	Name
NT2X70	AE	Power Converter (5V/12V)

Common procedures

The following procedures are referenced in this procedure:

- “Locating a faulty card in an SMA"
- replacing a card
- unseating a card
- reseating a card

Do not go to the common procedures unless directed to do so in the step-action procedure.

Action

The following flowchart is only a summary of the procedure. To replace the card, use the instructions in the step-action procedure that follows the flowchart.

NT2X70
in an SMA-MVI-20 (continued)

Summary of card replacement procedure for an NT2X70 card in an SMA

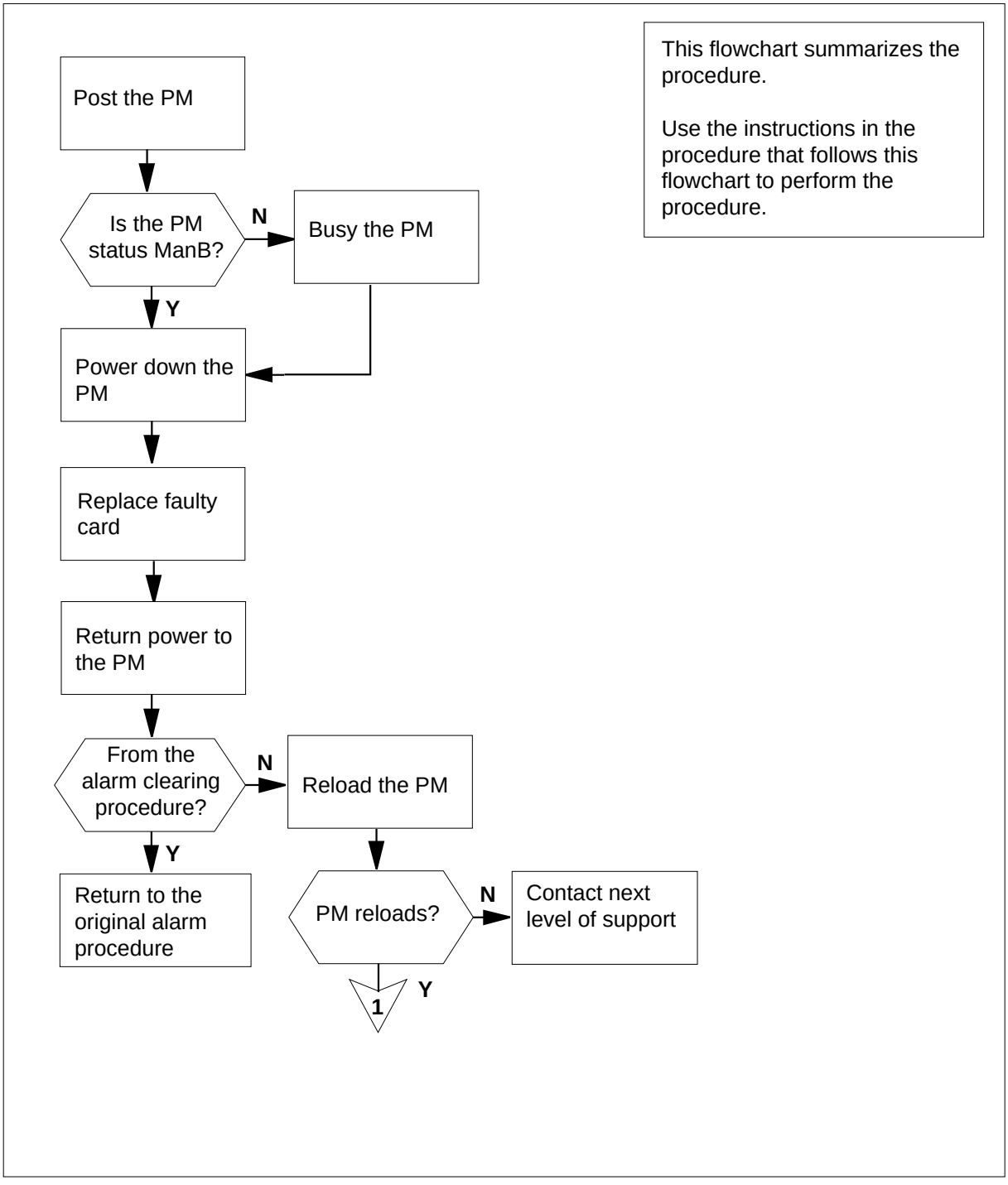

NT2X70 in an SMA-MVI-20 (continued)

Summary of card replacement procedure for an NT2X70 card in an SMA (continued)

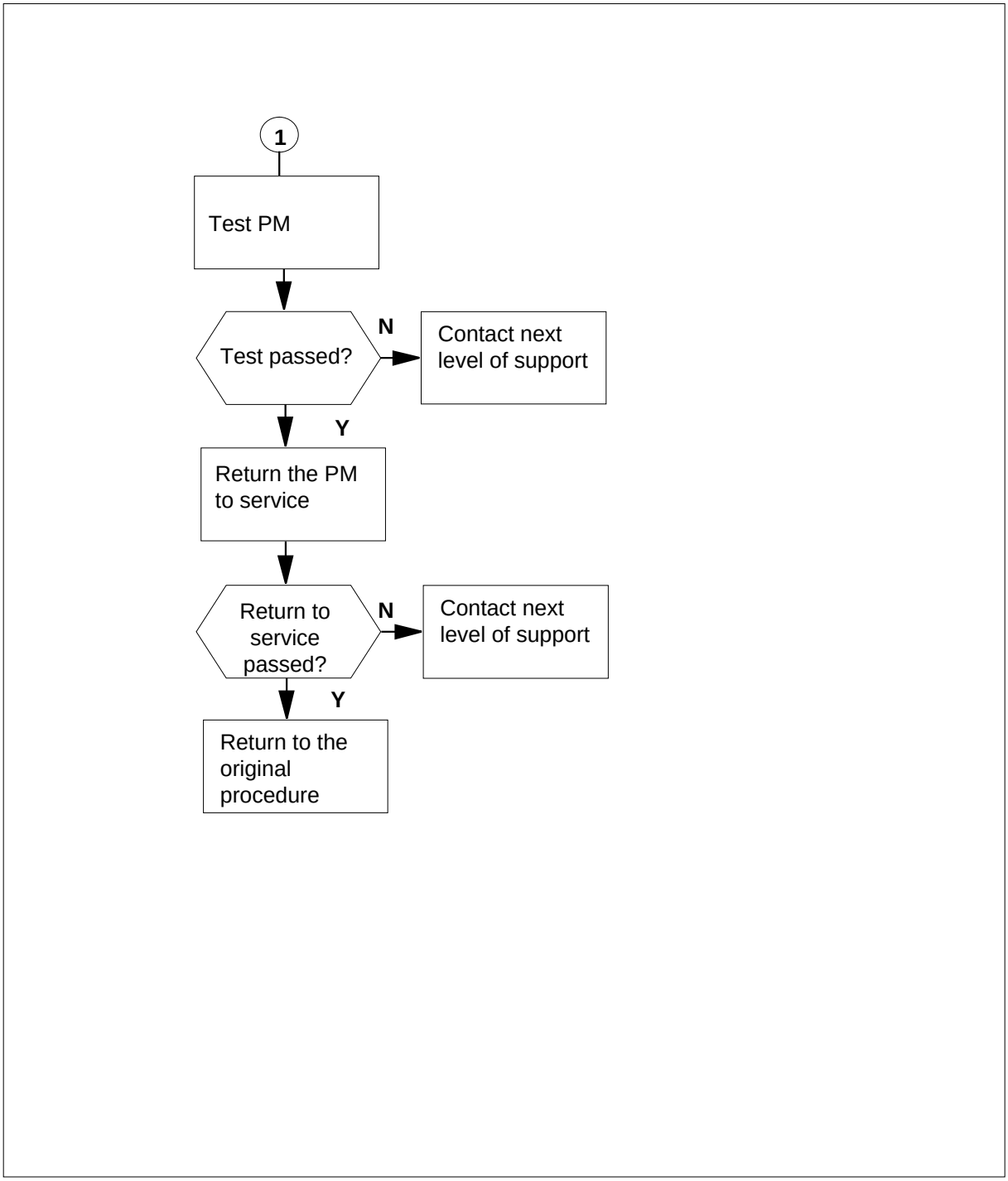

NT2X70
in an SMA-MVI-20 (continued)

Replacing an NT2X70 card in an SMA

At the equipment frame

1 Proceed only if you have been directed to this card replacement procedure from a step in a maintenance procedure, are using the procedure for verifying or accepting cards, or have been directed to this procedure by your maintenance support group.

2 Ensure you know the physical location of the faulty card.

If card location is	Do
known	step 4
unknown	step 3

3 Perform the common procedure “Locating a faulty card in an SMA” in this document

4

CAUTION
Loss of service
Ensure that you replace the card in the inactive unit and the mate unit is active.

Obtain a replacement card. Ensure the replacement card has the same product engineering code (PEC), including suffix, as the card being removed.

At the MAP terminal

5 Ensure the current MAP display is at the PM level, and post the SMA by typing

```
>MAPCI;MTC;PM;POST SMA sma_no
```

and pressing the Enter key.

where

sma_no
is the number of the SMA being posted

Example of a MAP response:

NT2X70
in an SMA-MVI-20 (continued)

```
SMA     SysB  ManB  Offl  CBsy  ISTb  InSv
    PM     3     0    1     0     2    13
    SMA    0     0    0     0     1     7

SMA 0 ISTb  Links_OOS:  CSide 0, PSide 0
Unit0:  Act   InSv
Unit1:  Inact SysB
```

6 Observe the MAP display and determine if the faulty card is in the active or the inactive unit.

If the faulty card is in the	Do
active unit	step 7
inactive unit	step 11

7 SWACT the units by typing

>SWACT

and pressing the Enter key.

A confirmation prompt for the SWACT command is displayed at the MAP terminal.

If SWACT	Do
cannot continue at this time	step 8
can continue at this time	step 9

8 Reject the prompt to SWACT the units by typing

>NO

and pressing the Enter key.

The system discontinues the SWACT.

9 Confirm the system prompt by typing

>YES

and pressing the Enter key.

The system runs a pre-SWACT audit to determine the ability of the inactive unit to accept activity reliably.

Note: A maintenance flag appears when maintenance tasks are in progress. Wait until the flag disappears before proceeding with the next maintenance action.

If the message is	Do
SWACT passed	step 11

If the message is	Do
`SWACT failed Reason: XPM SWACTback`	step 10
`SWACT refused by SWACT Controller`	step 10

10 The inactive unit could not establish two-way communication with the central control (CC) and has switched activity back to the originally active unit. You must clear all faults on the inactive unit before attempting to clear the alarm condition on the active unit.

Go to step 27.

At the equipment frame

11 Hang a sign on the active unit bearing the words: *Active unit-Do not touch.* This sign should not be attached by magnets or tape.

At the MAP terminal

12 Observe the MAP display and determine the state of the inactive unit.

If state is	Do
`SysB, CBsy, ISTb, or InSv`	step 13
`ManB`	step 15

At the equipment frame

13 Busy the inactive PM unit by typing

`>BSY UNIT unit_no`

and pressing the Enter key.

where

unit_no
is the number of the inactive SMA unit (0 or 1)

14

WARNING
Static electricity damage
Before removing any cards, put on a wrist strap and connect it to the wrist strap grounding point on the frame supervisory panel (FSP). This protects the equipment against damage caused by static electricity.

NT2X70
in an SMA-MVI-20 (continued)

Unseat but do not remove the NT6X69 Message Interface card and the NT6X80 PCM Loss Addition card using the common unseating a card procedure in this document.

15 Power down the unit by setting the ON/OFF switch on the power converter faceplate slots 25 through 27 to the OFF position.

Both the converter FAIL LED and FRAME FAIL lamps on the frame supervisory panel (FSP) turn ON. An audible alarm may sound.

If an alarm does sound, silence it by typing

```
>SIL
```

and pressing the Enter key.

16 Perform the common replacing a card procedure in this document.

17 Power up the power converter in the inactive SMA unit as follows:

a Ensure the power converter (NT2X70) is inserted. A major audible alarm may sound. This alarm is silenced when power is restored to the converter.

b Set the power switch on the power converter faceplate to the ON position.

18 Press the RESET button while setting the circuit breaker to the ON position.

Both the converter FAIL LED and FRAME FAIL lamps on the FSP turn OFF.

19 Reseat the NT6X69 Message Interface card and the NT6X80 PCM Loss Addition card using the common reseating a card procedure in this document.

20 Use the following information to determine the next step.

If you were directed here from	Do
alarm clearing procedures	step 24
other	step 21

At the MAP terminal

21 Load the inactive SMA unit by typing

```
>LOADPM UNIT unit_no
```

and pressing the Enter key.

where

unit_no
is the number of the SMA unit busied in step 13

If load	Do
passes	step 22
fails	step 27

22 Test the inactive SMA unit by typing

`>TST UNIT unit_no`

and pressing the Enter key.

where

unit_no
is the number of the SMA unit loaded in step 21

If TST	Do
passes	step 23
fails	step 27

23 Return the inactive SMA unit to service by typing

`>RTS UNIT unit_no`

and pressing the Enter key.

where

unit_no
is the number of the SMA unit tested in step 22

If RTS	Do
passes	step 24
fails	step 27

At the equipment frame

24 Remove the sign from the active SMA unit.

25 Send any faulty cards for repair according to local procedure.

26 Note the following in the office records:

- date the card was replaced
- serial number of the card
- symptoms that prompted replacement of the card

Go to step 28.

27 For further assistance, contact the personnel responsible for the next level of support.

28 You have successfully completed this procedure. Return to the maintenance procedure that directed you to this card replacement procedure and continue as directed.

NT2X70 in an SMS

Application

Use this procedure to replace an NT2X70 card in an SMS.

PEC	Suffixes	Name
NT2X70	AE	Power convertor (5V/12V)

Common procedures

None

Action

The following flowchart is only a summary of this procedure. To replace the card, use the instructions in the step-action procedure that follows the flowchart.

NT2X70 in an SMS (continued)

Summary of card replacement procedure for an NT2X70 card in an SMS

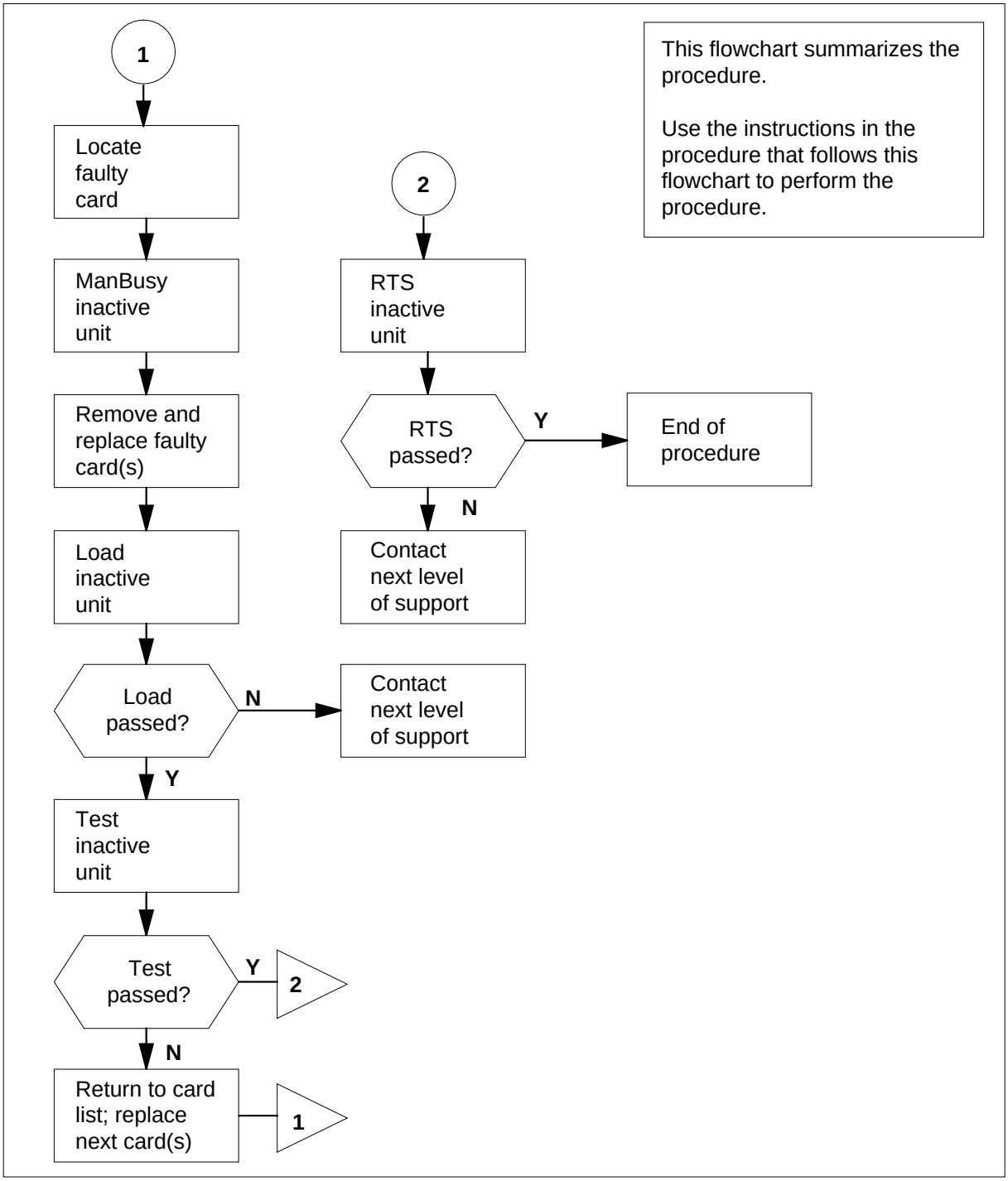

NT2X70
in an SMS (continued)

Replacing an NT2X70 card in an SMS

At the frame

1 Proceed only if you have been directed to this card replacement procedure from a step in a maintenance procedure, are using the procedure for verifying or accepting cards, or have been directed to this procedure by your maintenance support group.

At the MAP terminal

2

CAUTION
Loss of service
When replacing a card in the SMS, ensure the unit where you are replacing the card is inactive and the mate unit is active.

Obtain a replacement card. Verify the replacement card has the same product engineering code (PEC), including suffix, as the card to be removed.

3 Access the PM level of the MAP display by typing

`>MAPCI;MTC;PM;POST SMS sms_no`

and pressing the Enter key.

where

sms_no
is 0-127 for NT40 and 0-255 for DMS SuperNode

Example of a MAP response

```
SMS  3   INSV    LINKS_OOS    CSIDE 0     PSIDE 0
   Unit0      Act      InSv
   Unit1     Inact     ISTb
```

4 By observing the MAP display, be sure the card to be removed is on the inactive unit.

If faulty card is on	Do
active unit	step 5
inactive unit	step 8

5 Switch the activity of the units by typing

`>SWACT`

and pressing the Enter key.

The system determines the type of SWACT it can perform and displays a confirmation prompt for the selected SWACT.

If SWACT	Do
can continue at this time	step 6
cannot continue at this time	step 28

6 Switch the activity of the unit by typing

>YES

and pressing the Enter key.

The system runs a pre-SWACT audit to determine the ability of the inactive unit to accept activity reliably.

Note: A maintenance flag appears when maintenance tasks are in progress. Wait until the flag disappears before proceeding with the next maintenance action.

If the message is	Do
`SwACT passed`	step 8
`SwACT failed`	step 7
`SwACT failed Reason: XPM SwActback`	step 7
`SwACT refused by SwAct controller`	step 7

7 Clear the alarm condition on the inactive unit. Refer to the “SMS alarm clearing procedures" section in this document. When the alarm is cleared, return to step 1 of this procedure.

At the frame

8 Put a sign on the active unit bearing the words: *Active unit—Do not touch*. This sign should not be attached by magnets or tape.

At the MAP terminal

9 Busy the inactive PM unit by typing

>bsy UNIT **unit_no**

and pressing the Enter key.

where

unit_no
is the number of the faulty SMS unit

NT2X70 in an SMS (continued)

At the frame

10

WARNING
Static electricity damage
Before removing any cards, put on a wrist strap and connect it to the wrist strap grounding point on the left side of the frame supervisory panel of the SMS. This protects the equipment against damage caused by static electricity.

Put on a wrist strap.

11 Power down the unit by setting the ON/OFF switch on the power converter faceplate to the OFF position. Both the converter FAIL LED and FRAME FAIL lamp on the frame supervisory panel (FSP) will be ON. An audible alarm may sound. If an alarm does sound, silence it by typing at the MAP terminal

```
>SIL
```

and pressing the Enter key.

12

DANGER
Equipment damage
Take these precautions when removing or inserting a card:

1. Do not apply direct pressure to the components.
2. Do not force the cards into the slots.

Remove the NT2X70 card as shown in the following figures.

a Locate the card to be removed on the appropriate shelf.

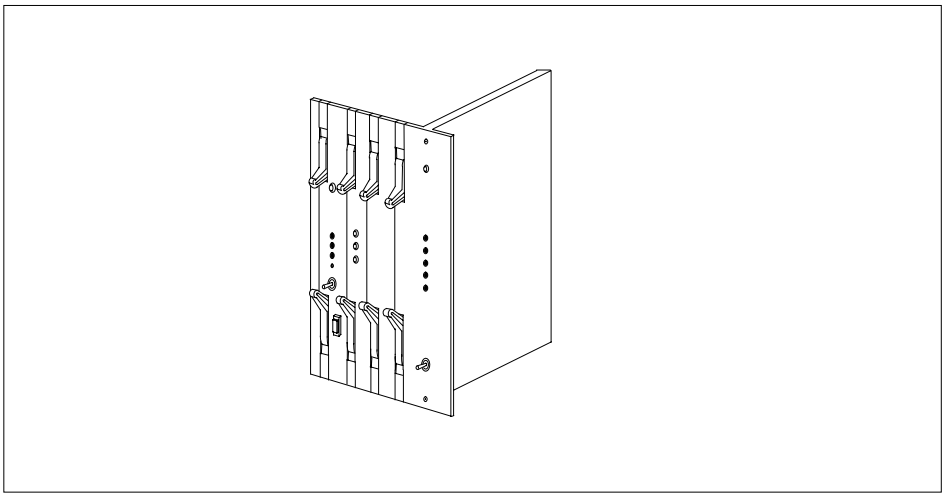

b Open the locking levers on the card to be replaced. This will move the card 1/2 inch from the shelf backplane.

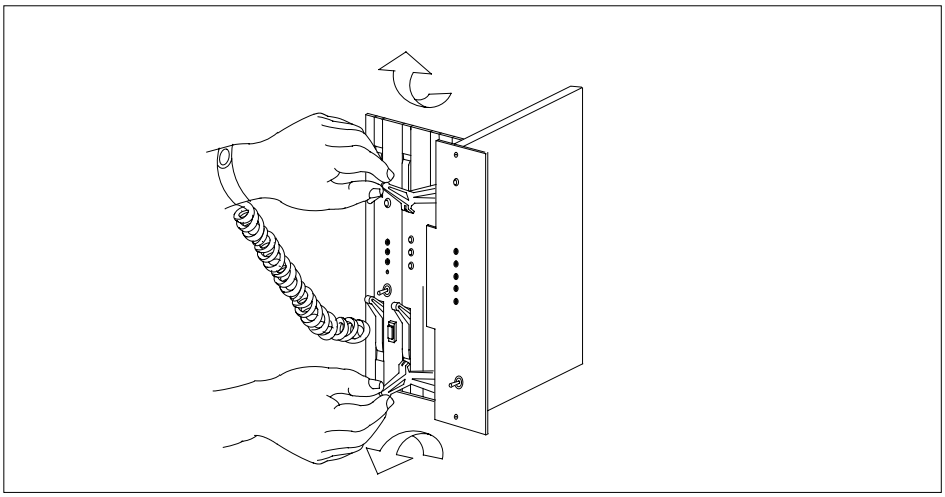

c Holding the card by the face plate, slide the card along the guides until the card is free from the shelf.

NT2X70
in an SMS (continued)

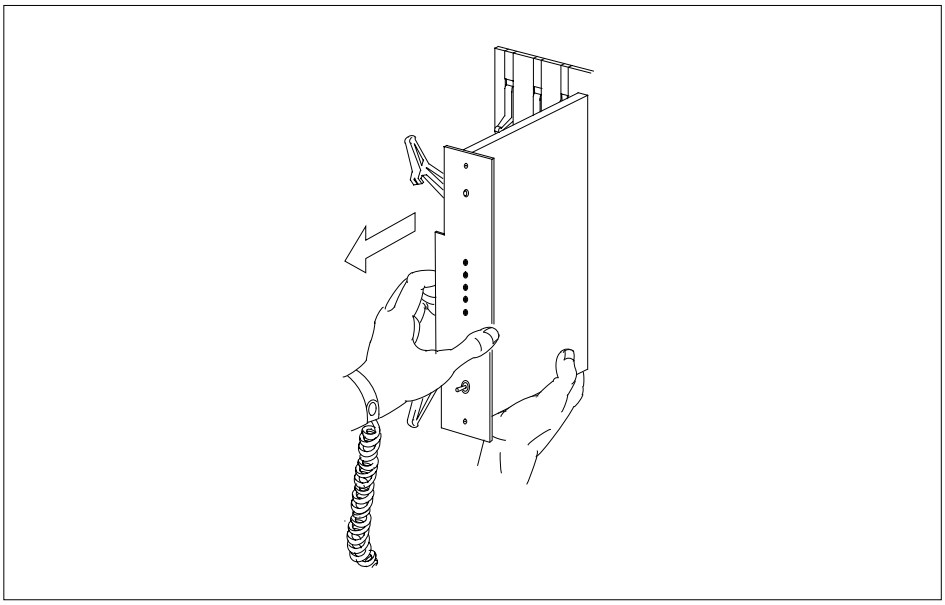

d Verify the replacement card has the same PEC, including suffix, as the card you just removed.

13

DANGER
Equipment damage
Take these precautions when removing or inserting a card:

1. Do not apply direct pressure to the components.
2. Do not force the cards into the slots.

Insert the NT2X70 power converter replacement card as shown in the following figures.

a Hold the card by the face plate with the components visible on the right-hand side.

b With the locking levers on the replacement card in the open position, place the back edge of the card into the upper and lower guides of the desired slot position on the shelf.

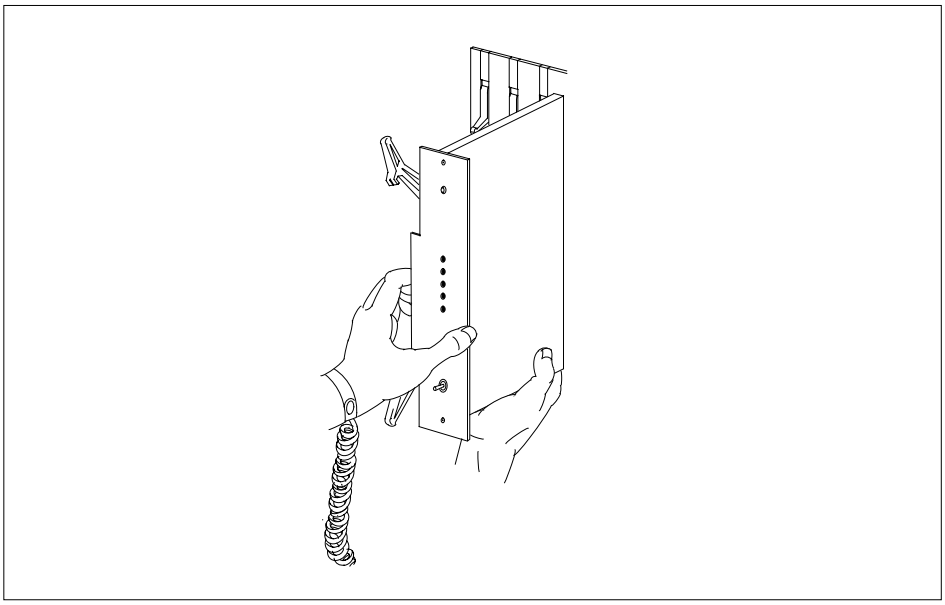

c Gently slide the card into the shelf.

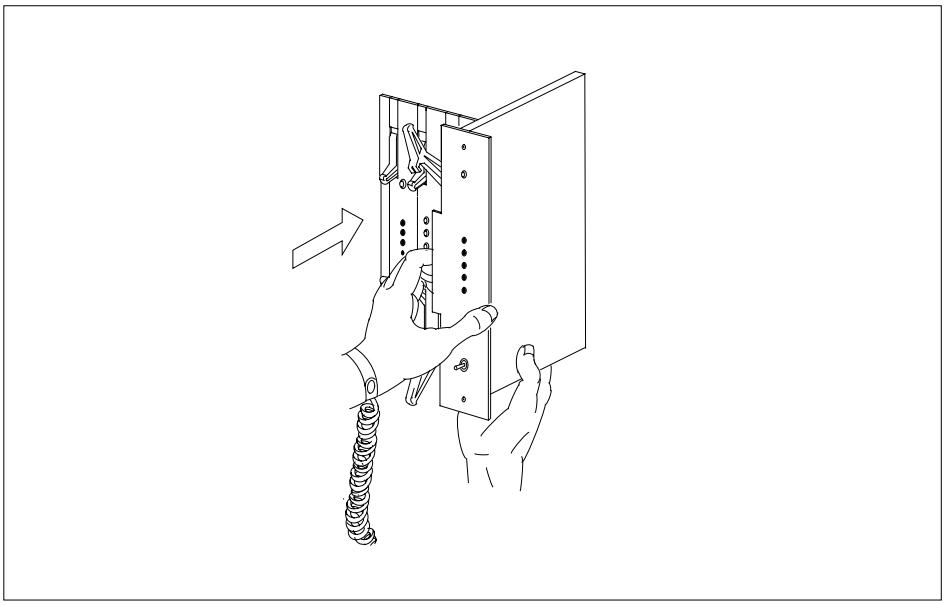

14 Seat and lock the card.

a Using your fingers or thumbs, push on the upper and lower edges of the faceplate to ensure the card is fully seated in the shelf.

NT2X70
in an SMS (continued)

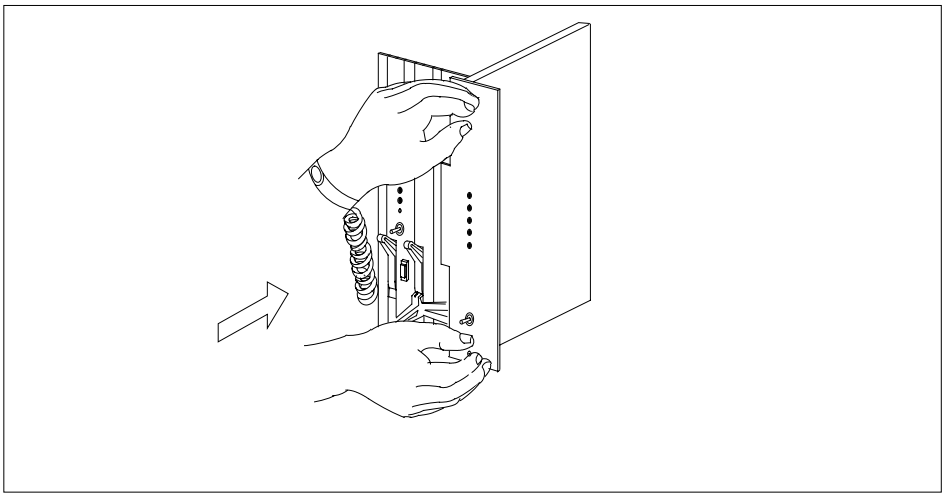

b Simultaneously rotate the top latch downward and the bottom latch upward. The card will lock into position when the lock-latches are flush with the faceplate of the card.

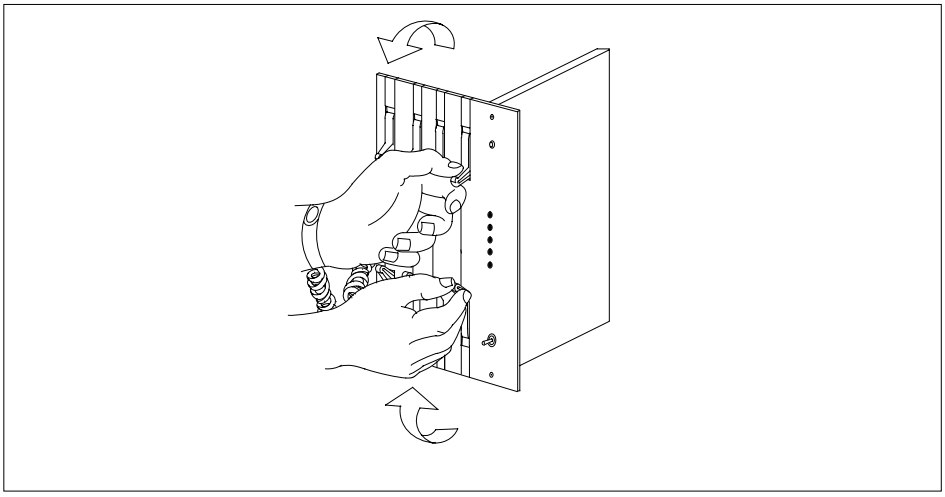

15 Power up the inactive SMS unit as follows:

a Ensure the power converter (NT2X70) is inserted. A major audible alarm may sound. This alarm is silenced when power is restored to the converter.

b Set the POWER switch to the ON position.

If FSP is equipped with	Do
fuses	step 16

If FSP is equipped with	Do
circuit breakers	step 17

16 Press and hold the RESET button for 1 second. Both the converter FAIL LED and FRAME FAIL lamp on the frame supervisory panel (FSP) will be ON.

Go to step 18.

17 Press the RESET button while setting the circuit breaker to the ON position. Both the converter FAIL LED and FRAME FAIL lamp on the frame supervisory panel (FSP) will be ON.

At the MAP terminal

18 Load the inactive SMS unit by typing

```
>LOADPM  UNIT  unit_no CC
```

and pressing the Enter key.

where

unit_no
is the number of the faulty SMS unit

If LOADPM	Do
passed	step 19
failed	step 26

19 Use the following information to determine what step to go to next in this procedure.

If you entered this procedure from	Do
alarm clearing procedures	step 25
other	step 20

20 Test the inactive unit by typing

```
>TST UNIT  unit_no
```

and pressing the Enter key.

where

unit_no
is the number of the faulty SMS unit

If TST	Do
passed	step 21

NT2X70 in an SMS (end)

If TST	Do
failed	step 25

21 Return the inactive SMS unit to service by typing

>RTS UNIT **unit_no**

and pressing the Enter key.

where

unit_no
is the number of the faulty SMS unit

If RTS	Do
passed	step 22
failed	step 26

At the frame

22 Remove the sign from the active SMS unit.

23 Send any faulty cards for repair according to local procedure.

24 Record the following items in office records according to local policy:

- date the card was replaced
- serial number of the card
- symptoms that prompted replacement of the card

Go to step 27.

25 Return to the maintenance procedure that directed you to this procedure. At the point where a faulty card list was produced, identify the next faulty card on the list and go to the appropriate card replacement procedure for that card in this manual.

26 Obtain further assistance in replacing this card by contacting the personnel responsible for higher level of support.

27 You have successfully completed this procedure. Return to the maintenance procedure that directed you to this card replacement procedure and continue as directed.

28 For further assistance with switch of activity, contact the personnel responsible for the next level of support.

Note: If the system recommends using the SWACT command with the FORCE option, consult office personnel to determine if use of the FORCE option is advisable.

NT2X70 in an SMS-R

Application

Use this procedure to replace the following card in an SMS-R shelf.

PEC	Suffixes	Name
NT2X70	AE	Power Convertor (5V/12V)

Common procedures

None

Action

The following flowchart is only a summary of the procedure. To replace the card, use the instructions in the step-action procedure that follows the flowchart.

NT2X70 in an SMS-R (continued)

Summary of card replacement procedure for an NT2X70 in an SMS-R

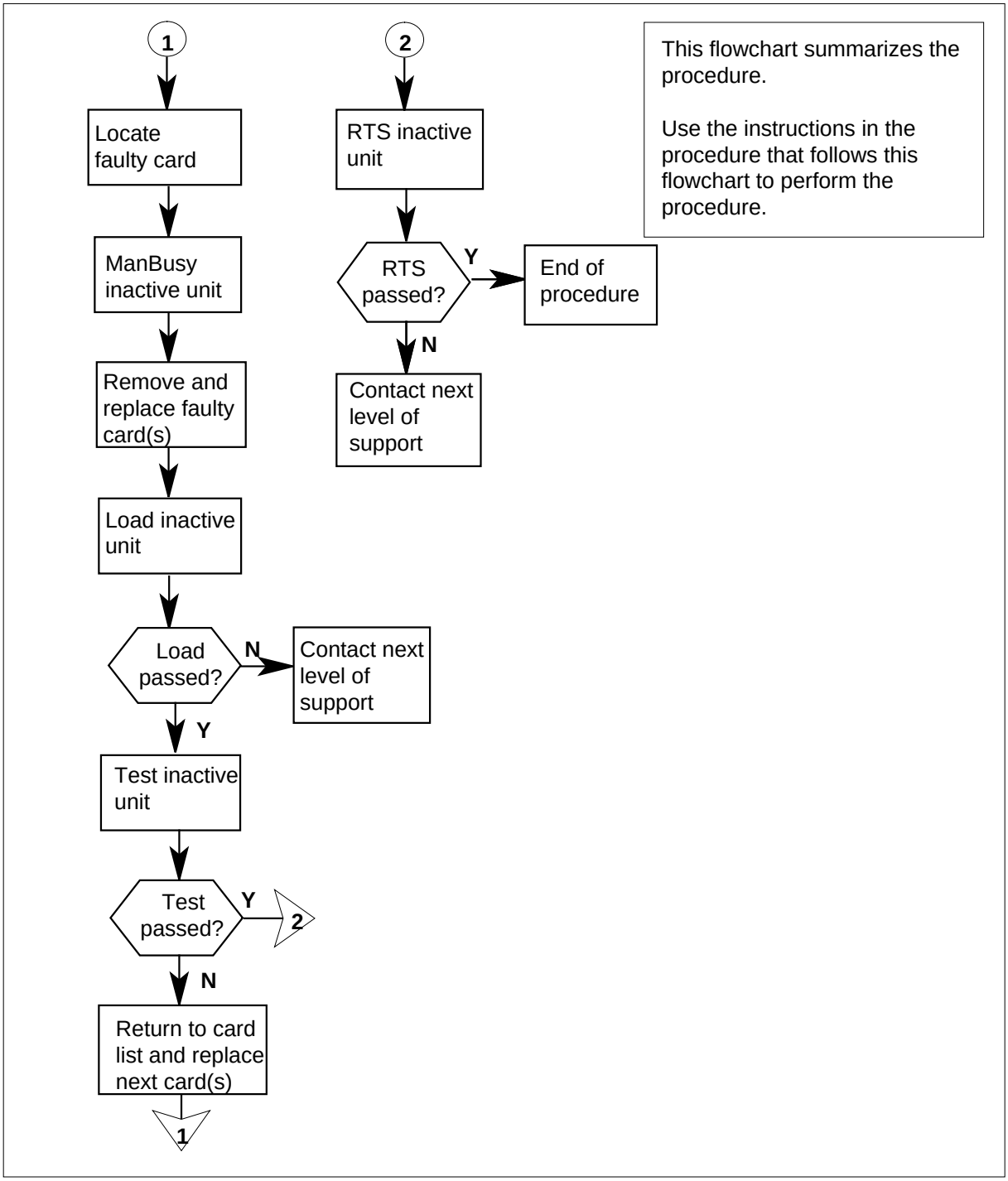

Replacing an NT2X70 in an SMS-R

At your Current Location

1 Proceed only if you were either directed to this card replacement procedure from a step in a maintenance procedure, are using this procedure to verify or accept cards, or were directed to this procedure by your maintenance support group.

2

CAUTION
Loss of service
When replacing a card in the SMS-R, ensure that the unit in which you are replacing the card is inactive and that the mate unit is active.

Obtain a replacement card. Verify that the replacement card has the same product engineering code (PEC), including suffix, as the card to be removed.

At the MAP display

3 Access the PM level of the MAP display by typing

`>MAPCI;MTC;PM;POST SMSR smsr_no`

and pressing the Enter key.

where

smsr_no
is the number of the SMS-R to be posted

Example of a MAP response

```
SMSR 3   INSV    LINKS_OOS    CSIDE 0     PSIDE 0
   Unit0      Act      InSv
   Unit1     InAct     ISTb
```

4 By observing the MAP display, ensure that the card to be removed is on the inactive unit.

If faulty card is on	Do
active unit	step 5
inactive unit	step 8

5 Switch the activity of the units by typing

`>SWACT`

NT2X70
in an SMS-R (continued)

and pressing the Enter key.

The system determines the type of SWACT it can perform and displays a confirmation prompt for the selected SWACT.

If SWACT	Do
can continue at this time	step 6
cannot continue at this time	step 28

6 Switch the activity of the unit by typing

>YES

and pressing the Enter key.

The system runs a pre-SWACT audit to determine the ability of the inactive unit to accept activity reliably.

Note: A maintenance flag appears when maintenance tasks are in progress. Wait until the flag disappears before proceeding with the next maintenance action.

If the message is	Do
`SwAct passed`	step 8
`SwAct failed`	step 7
`SwAct failed Reason: XPM SwActback`	step 7
`SwAct refused by SwAct controller`	step 7

7 Return to the alarm clearing procedure to clear the alarm condition on the inactive unit. When the alarm is cleared, return to step 1 of this procedure.

At the frame

8 Hang a sign on the active unit bearing the words: *"Active unit-Do not touch."* This sign should not be attached by magnets or tape.

At the MAP terminal

9 Busy the inactive PM unit by typing

`>bsy UNIT unit_no`

and pressing the Enter key.

where

unit_no
is the number of the faulty SMS-R unit

At the frame

10

WARNING
Static electricity damage
Before removing any cards, put on a wrist strap and connect it to the wrist strap grounding point on the left side of the frame supervisory panel of the SMS-R. This protects the equipment against damage caused by static electricity.

Put on a wrist strap.

11

DANGER
Equipment damage
Take the following precautions when removing or inserting a card:

1. Do not apply direct pressure to the components.
2. Do not force the cards into the slots.

Power down the unit by setting the ON/OFF switch on the power converter faceplate to the OFF position. Both the converter FAIL LED and FRAME FAIL lamp on the frame supervisory panel (FSP) will be ON. An audible alarm may sound. If an alarm does sound, silence it by typing

```
>SIL
```

and pressing the Enter key.

12 Remove the NT2X70 card as shown in the following figures.

a Locate the card to be removed on the appropriate shelf.

NT2X70
in an SMS-R (continued)

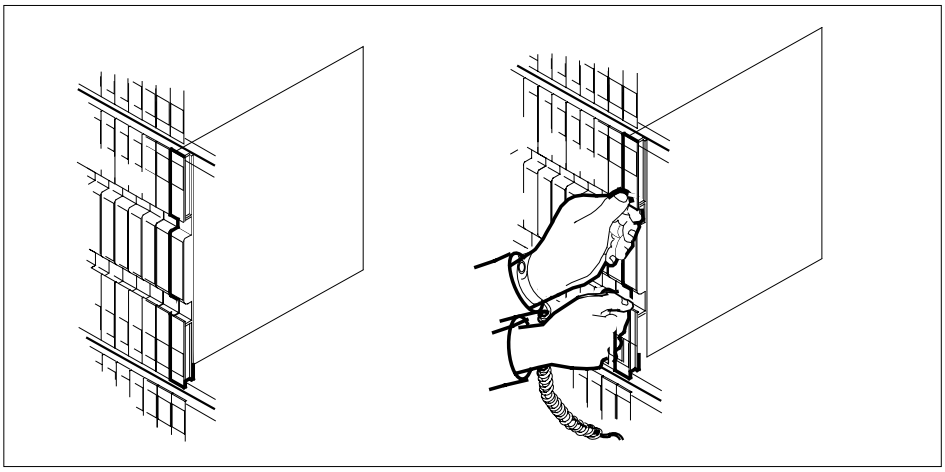

b Open the locking levers on the card to be replaced and gently pull the card toward you until it clears the shelf.

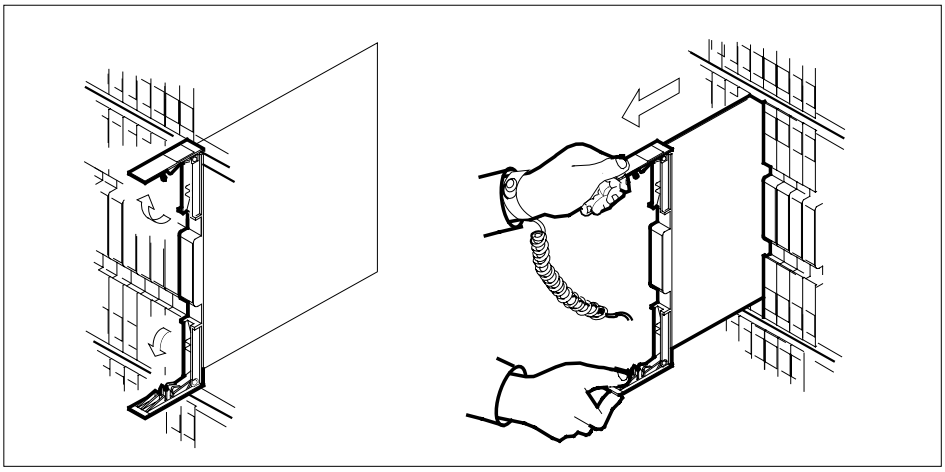

c Verify that the replacement card has the same PEC, including suffix, as the card you just removed.

13 Open the locking levers on the replacement card.

a Align the card with the slots in the shelf and gently slide the card into the shelf.

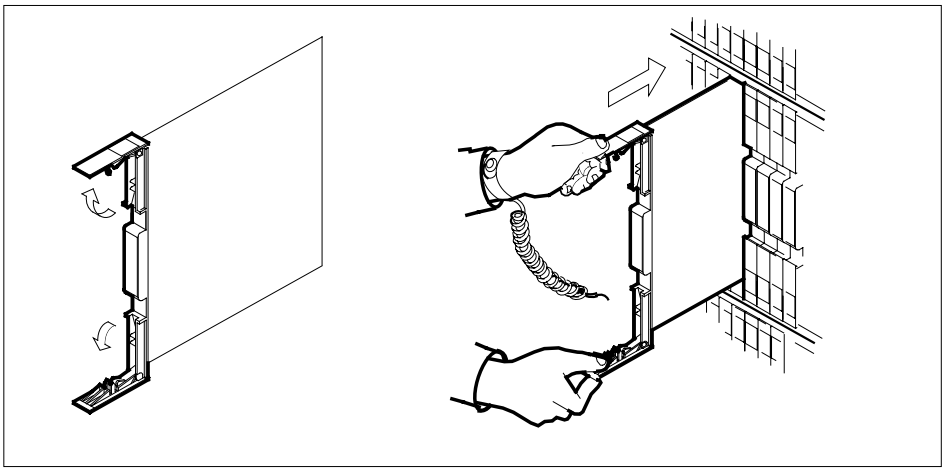

14 Seat and lock the card.

a Using your fingers or thumbs, push on the upper and lower edges of the faceplate to ensure that the card is fully seated in the shelf.

b Close the locking levers.

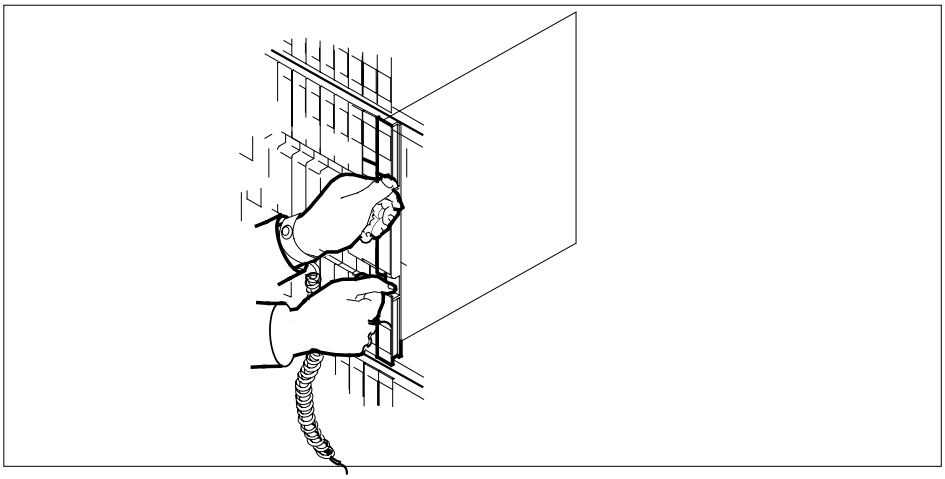

15 Power up the inactive SMS-R unit as follows:

a Ensure that the power converter (NT2X70) is inserted. A major audible alarm may sound. This alarm is silenced when power is restored to the converter.

NT2X70
in an SMS-R (continued)

b Set the power switch to the ON position.

If FSP is equipped with	Do
fuses	step 16
circuit breakers	step 17

16 Press and hold the reset button for 1 s. Both the converter FAIL LED and FRAME FAIL lamp on the FSP will be ON.

Go to step 18.

17 Press the reset button while setting the circuit breaker to the ON position. Both the converter FAIL LED and FRAME FAIL lamp on the FSP will be ON.

Go to step18.

At the MAP display

18 Load the inactive SMS-R unit by typing

`>LOADPM UNIT unit_no`

and pressing the Enter key.

where

unit_no
is the number of the faulty SMS-R unit

If LOADPM	Do
passes	step 19
fails	step 26

19 Use the following information to determine the next step in this procedure.

If you entered this procedure from	Do
alarm clearing procedures	step 25
other	step 20

20 Test the inactive unit by typing

`>TST UNIT unit_no`

and pressing the Enter key.

where

unit_no
is the number of the faulty SMS-R unit

If TST	Do
passes	step 21
fails	step 25

21 Return the inactive SMS-R unit to service by typing

>RTS UNIT **unit_no**

and pressing the Enter key.

where

unit_no
is the number of the faulty SMS-R unit

If RTS	Do
passes	step 22
fails	step 26

At the frame

22 Remove the sign from the active SMS-R unit.

23 Send any faulty cards for repair according to local procedure.

24 Record the following items in office records in accordance with local policy:

- the date the card was replaced
- the serial number of the card
- the symptoms that prompted replacement of the card

Go to step 27.

25 Return to *Alarm Clearing Procedures* section of this manual or to the procedure that directed you to this procedure. At the point where a faulty card list was produced, identify the next faulty card on the list and go to the appropriate card replacement procedure for that card in this manual.

26 Obtain further assistance in replacing this card by contacting personnel responsible for a higher level of support.

27 You have successfully completed this procedure. Return to the maintenance procedure that directed you to this card replacement procedure and continue as directed.

28 For further assistance with switch of activity, contact the personnel responsible for the next level of support.

Note: If the system recommends using the SWACT command with the FORCE option, consult office personnel to determine if use of the FORCE option is advisable.

NT2X70 in an SMU

Application

Use this procedure to replace an NT2X70 card in an SMU.

PEC	Suffixes	Name
NT2X70	AA, AD, AE	Power converter

Common procedures

The common replacing a card procedure is referenced in this procedure.

Action

The following flowchart is a summary of the procedure. To replace the card, use the instructions in the step-action procedure that follows the flowchart.

NT2X70 in an SMU (continued)

Summary of card replacement procedure for an NT2X70 card in an SMU

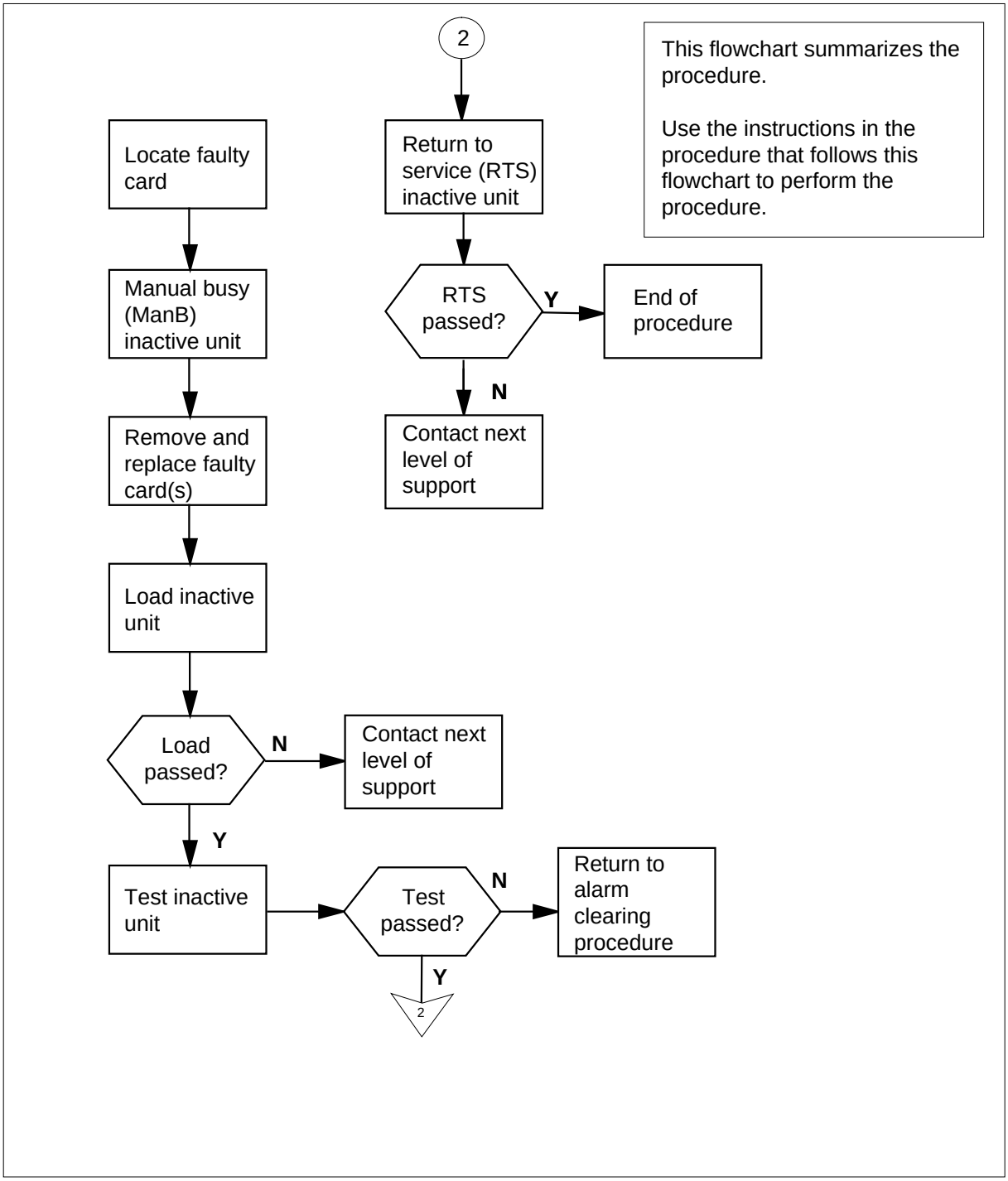

NT2X70 in an SMU (continued)

Replacing an NT2X70 card in an SMU

At your current location:

1 Proceed only if you have been directed to this card replacement procedure from a step in a maintenance procedure.

2

CAUTION
Loss of service
When replacing a card in the SMU, ensure that the unit where you are replacing the card is inactive and that the mate unit is active.

Get a replacement card. Verify that the replacement card has the same product engineering code (PEC), including suffix, as the card to be removed.

At the MAP terminal:

3 Ensure the PM level of the MAP terminal is currently displayed and post the SMU by typing

`>MAPCI;MTC;PM;POST SMU smu_no`

and pressing the Enter key.

where

smu_no
is the number of the SMU to be posted

Example of a MAP response:

```
SMU     SysB  ManB  Offl  CBsy  ISTb  InSv
    PM      3     0    1     0     2    13
    SMU     0     0    0     0     1     7

SMU 0 ISTb  Links_OOS:  CSide 0, PSide 0
Unit0:  Inact SysB
Unit1:  Act   InSv
```

4 By observing the MAP display, ensure the card to be removed is on the inactive unit.

If faulty card is on	Do
active unit	step 5
inactive unit	step 8

5 Switch the activity of the units by typing

>SWACT

and pressing the Enter key.

The system determines the type of SwAct it can perform. The system displays a confirmation prompt for the selected SwAct.

If SwAct	Do
can continue at this time	step 6
cannot continue at this time	step 25

6 Switch the activity of the unit by typing

>YES

and pressing the Enter key.

The system runs a pre-SwAct audit to determine if the inactive unit can accept activity reliably.

If the message is	Do
SwAct passed	step 8
SwAct failed	step 7
SwAct failed Reason: XPM SwActback	step 7
SwAct refused by SwAct controller	step 7

Note: A maintenance flag appears when maintenance tasks are in progress. Wait until the flag disappears before proceeding with the next maintenance action.

7 Return to *Alarm Clearing Procedures* to clear the alarm condition on the inactive unit. After the alarm is cleared, return to step 1 of this procedure.

At the SME frame:

8 Put a sign on the active unit bearing the following words: “Active unit—Do not touch."

At the MAP terminal:

9 Busy the inactive SMU unit by typing

>BSY UNIT unit_no

and pressing the Enter key.

where

NT2X70 in an SMU (continued)

unit_no
is the number of the inactive SMU unit (0 or 1)

At the SME frame:

10 Put on a wrist strap.

11 Power down the unit by setting the ON/OFF switch on the power converter faceplate to the OFF position. The converter Fail light emitting diode (LED) is on and the Frame Fail lamp on the frame supervisory panel (FSP) is on. An audible alarm may sound.

If an alarm does sound, silence it by typing

```
>SIL
```

and pressing the Enter key.

12 Go to the common replacing a card procedure in this document, then return to step 13 of this procedure.

13 Power up the inactive SMU unit as follows:

a Ensure the power converter card (NT2X70) is inserted. A major audible alarm may sound. This alarm is silenced when power is restored to the converter.

b Set the Power switch to the On position.

If FSP is equipped with	Do
fuses	step 14
circuit breakers	step 15

14 Press and hold the Reset button for 1 s. Both the converter Fail LED and Frame fail lamp on the frame supervisory panel (FSP) will be On. Go to step 16.

15 If you are resetting a NT2X70AA or NT2X70AD card, press the Reset button while setting the circuit breaker to the On position. If you are resetting a NT2X70AE card, press the Reset button on the Power switch while setting the circuit breaker to the On position. The converter Fail LED is on, and the Frame Fail lamp on the frame supervisory panel is on.

Go to step 16.

16 Use the following information to determine where to go in this procedure.

If you entered this procedure from	Do
alarm clearing procedures	step 20
other	step 17

NT2X70
in an SMU (continued)

At the MAP terminal:

17 Load the inactive SMU unit by typing

`>LOADPM  UNIT unit_no`

and pressing the Enter key.

where

unit_no
is the number of the SMU unit busied in step 9

If LOADPM	Do
passed	step 18
failed	step 21

18 Test the inactive unit by typing

`>TST UNIT unit_no`

and pressing the Enter key.

where

unit_no
is the number of the SMU unit loaded in step 17

If TST	Do
passed	step 19
failed	step 21

19 Return the inactive SMU unit to service by typing

`>RTS UNIT unit_no`

and pressing the Enter key.

where

unit_no
is the number of the SMU unit tested in step 18

If RTS	Do
passed	step 22
failed	step 21

20 Return to *Alarm Clearing Procedures*.

If necessary, go to the point where a faulty card list is initiated, identify the next faulty card on the list, and go to the appropriate card replacement procedure for that card.

21 Contact personnel responsible for higher level support and get further help to replace this card.

NT2X70 in an SMU (end)

22 Send any faulty cards for repair according to local procedure.

23 Record the following items in office records:

- date the card was replaced
- serial number of the card
- symptoms that prompted replacement of the card

24 You have successfully completed this procedure. Remove the sign from the active unit. Return to the maintenance procedure that directed you to this card replacement procedure and continue as directed.

25 For further assistance with switch of activity, contact the personnel responsible for the next level of support.

Note: If the system recommends using the SWACT command with the FORCE option, consult office personnel to determine if use of the FORCE option is advisable.

NT2X90 in an IOPAC RMM

Application

Use this procedure to replace the following card in a remote maintenance module (RMM).

PEC	Suffix	Name
NT2X90	AD	Incoming/outgoing test trunk

Common procedures

The common replacing a card procedure is referenced in this procedure.

Action

The following flowchart is a summary of the procedure. To replace the card, use the instructions in the step-action procedure that follows the flowchart.

NT2X90
in an IOPAC RMM (continued)

Summary of card replacement procedure for an NT2X90 in an RMM

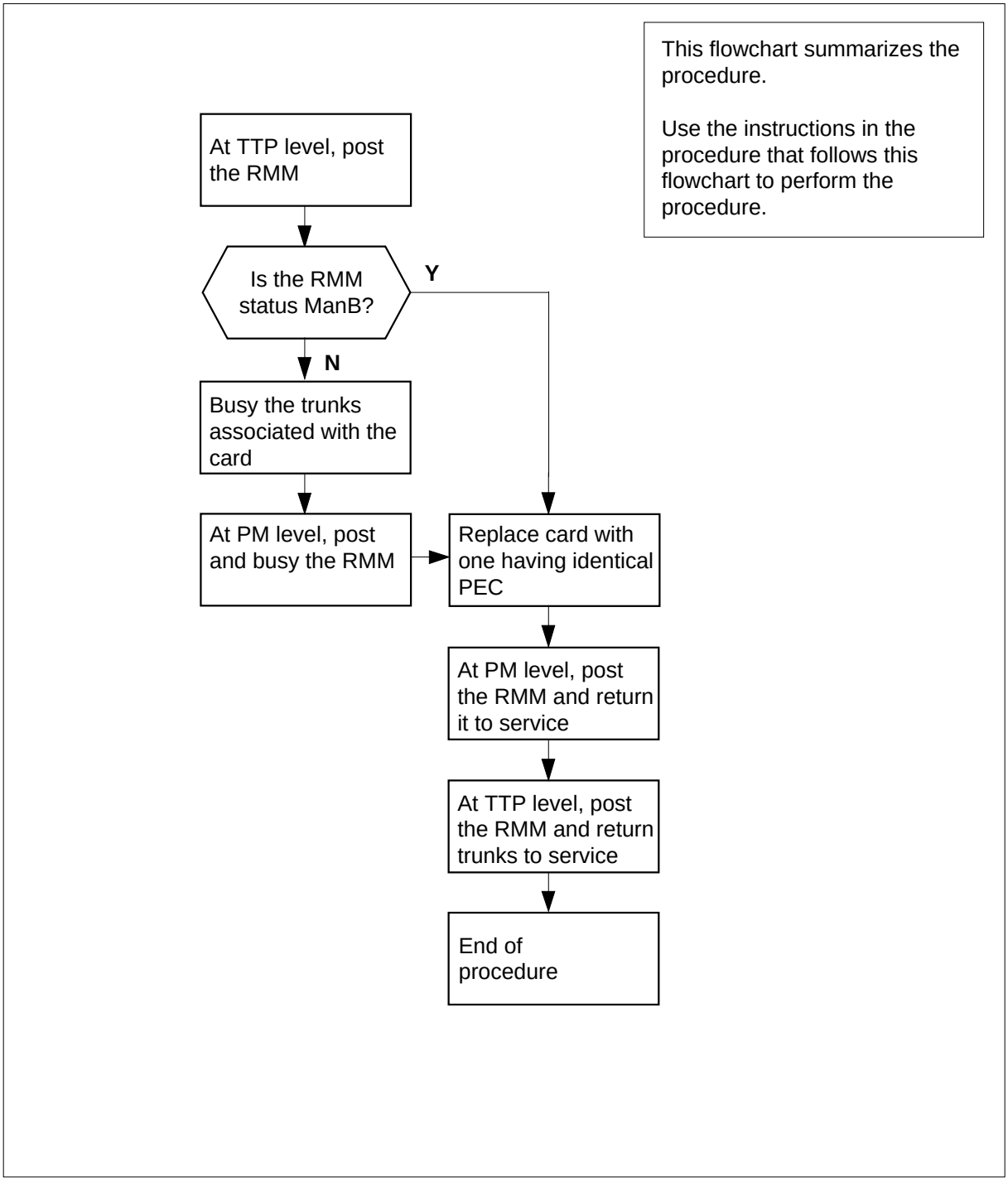

NT2X90
in an IOPAC RMM (continued)

Replacing an NT2X90 in an RMM

At your Current Location

1 Obtain a replacement card. Ensure the replacement card has the same product equipment code (PEC), including suffix, as the card to be removed.

At the MAP terminal

2 Access the trunk test position (TTP) level of the MAP display and post the RMM that contains the card to be replaced by typing

`>MAPCI;MTC;TRKS;TTP;POST P RMM rmm_no ckt_no to ckt_no`

and pressing the Enter key.

where

rmm_no
is the number of the RMM shelf where the card is to be replaced

ckt_no
is the number of the trunk circuit associated with the card to be replaced

Example of a MAP response:

```
POST  20   DELQ       BUSY Q          DIG
TTP 6-006
CKT TYPE   PM NO.     COM LANG        STA S R DOT TE R
OG    MF RMM 0 0          LTU         LO
                                      P_IDL

LAST CIRCUIT = 27
POST CKT IDLED
SHORT CLLI IS:  LTU
OK, CLLI POSTED
```

3 Ensure the correct card is being pulled from the correct card slot by typing

`>CKTLOC`

and pressing the Enter key.

4 Busy the trunks associated with the card to be replaced by typing

`>BSY ALL`

and pressing the Enter key.

NT2X90
in an IOPAC RMM (continued)

At the RMM

5

WARNING
Static electricity damage
Wear a wrist strap connected to the wrist strap grounding point at the top of each equipment rack, (Bay 0, 1, 2, and 3), while handling circuit cards. This protects the cards against damage caused by static electricity.

Replace the NT2X90 card using the common replacing a card procedure in this document. When you have completed the procedure, return here.

At the MAP terminal

6 Go to the TRKS;TTP level of the MAP terminal and post the RMM trunk circuits by typing

`>TRKS;TTP;POST P RMM rmm_no ckt_no to ckt_no`

and pressing the Enter key.

where

rmm_no
is the number of the RMM shelf where the card is to be replaced

ckt_no
is the number of the trunk circuit associated with the card to be replaced

7 At the PM level, place the first circuit on hold and test the second circuit by typing

`>HOLD`

and pressing the Enter key.

and then typing

`>TST`

and pressing the Enter key

If TST	Do
passed	step 8
failed	step14

8 Return to service the tested circuit by typing

`>RTS`

and pressing the Enter key.

If RTS	Do
passed	step 9
failed	step14

9 Place the untested circuit in the control position by typing

>NEXT 1

and pressing the Enter key.

10 Test the circuit by typing

>TST

If TST	Do
passed	step11
failed	step14

11 Return to service and clear the trunk test position by typing

>RTS;NEXT

and pressing the Enter key.

12 Send any faulty cards for repair according to local procedure.

13 Record the following items in office records:

- date the card was replaced
- serial number of the card
- symptoms that prompted replacement of the card

Go to step 15.

14 Obtain further assistance in replacing this card by contacting the personnel responsible for higher level of support.

15 You have completed this procedure.

NT2X90 in an OPAC RMM

Application

Use this procedure to replace an the following card in a remote maintenance module (RMM).

PEC	Suffix	Name
NT2X90	AD	Incoming/outgoing test trunk

Common procedures

The common replacing a card procedure is referenced in this procedure.

Action

The following flowchart is a summary of the procedure. To replace the card, use the instructions in the step-action procedure that follows the flowchart.

NT2X90
in an OPAC RMM (continued)

Summary of card replacement procedure for an NT2X90 in an RMM

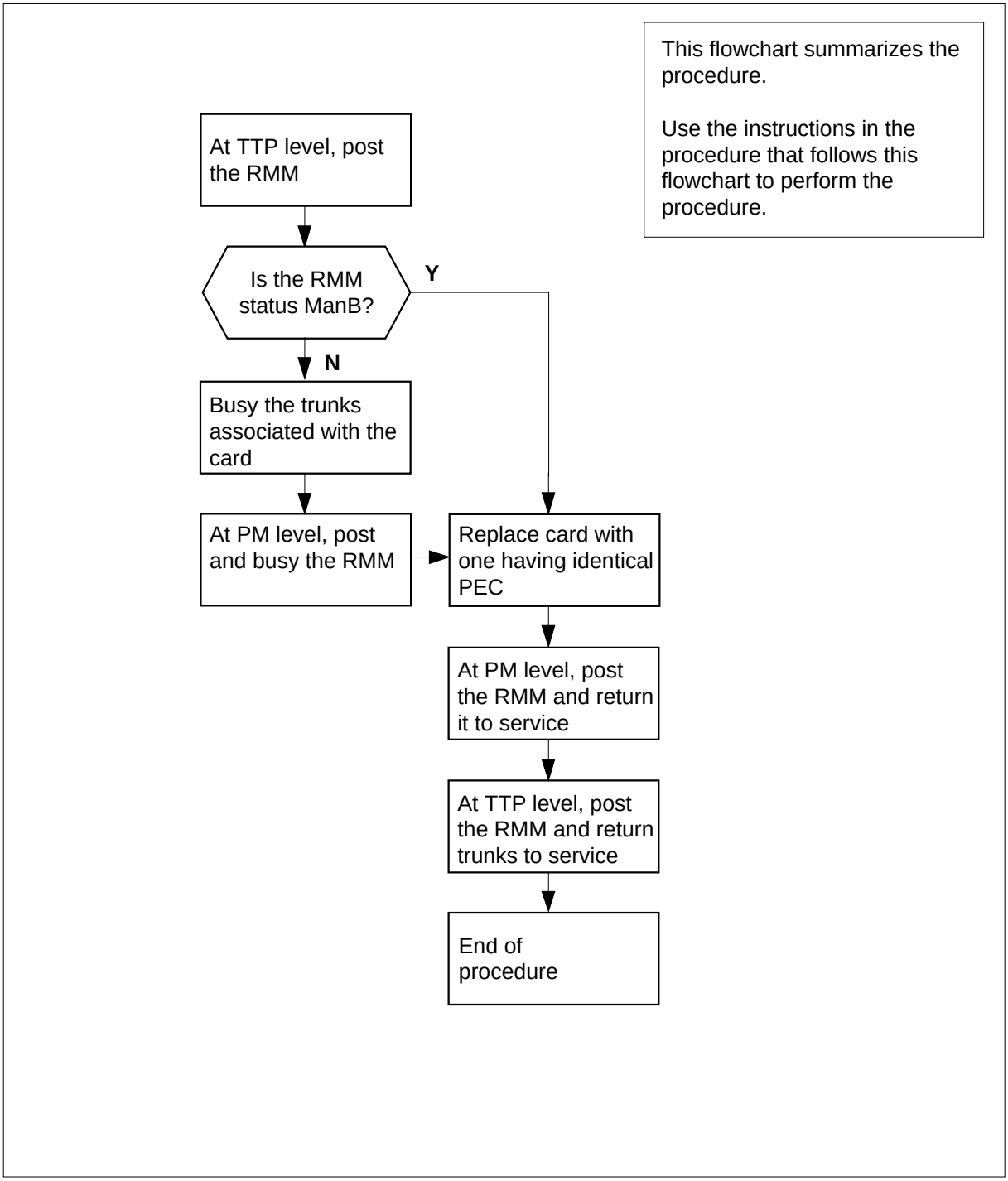

NT2X90 in an OPAC RMM (continued)

Replacing an NT2X90 in an RMM

At your Current Location

1 Obtain a replacement card. Ensure the replacement card has the same product equipment code (PEC), including suffix, as the card to be removed.

At the MAP terminal

2 Access the trunk test position (TTP) level of the MAP display and post the RMM that contains the card to be replaced by typing

`>MAPCI;MTC;TRKS;TTP;POST P RMM rmm_no ckt_no to ckt_no`

and pressing the Enter key.

where

rmm_no
is the number of the RMM shelf where the card is to be replaced

ckt_no
is the number of the trunk circuit associated with the card to be replaced

Example of a MAP response:

```
POST  20   DELQ       BUSY Q          DIG
TTP 6-006
CKT TYPE   PM NO.     COM LANG        STA S R DOT TE R
OG    MF RMM 0 0          LTU         LO
                                      P_IDL

LAST CIRCUIT = 27
POST CKT IDLED
SHORT CLLI IS:  LTU
OK, CLLI POSTED
```

3 Ensure the correct card is being pulled from the correct card slot by typing

`>CKTLOC`

and pressing the Enter key.

4 Busy the trunks associated with the card to be replaced by typing

`>BSY ALL`

and pressing the Enter key.

NT2X90
in an OPAC RMM (continued)

At the RMM

5

WARNING
Static electricity damage
Wear a wrist strap connected to the wrist strap grounding point at the top of each equipment rack, (Bay 0, 1, 2, and 3), while handling circuit cards. This protects the cards against damage caused by static electricity.

Replace the NT2X90 card using the common replacing a card procedure in this document. When you have completed the procedure, return here.

At the MAP terminal

6 Go to the peripheral module (PM) level of the MAP terminal and post the RMM trunk circuits by typing

`>PM;POST P RMM rmm_no ckt_no to ckt_no`

and pressing the Enter key.

where

rmm_no
is the number of the RMM shelf where the card is to be replaced

ckt_no
is the number of the trunk circuit associated with the card to be replaced

7 At the PM level, place the first circuit on hold and test the second circuit by typing

`>HOLD`

and pressing the Enter key.

and then typing

`>TST`

and pressing the Enter key

If TST	Do
passed	step 8
failed	step14

8 Return to service the tested circuit by typing

`>RTS`

NT2X90
in an OPAC RMM (end)

and pressing the Enter key.

If RTS	Do
passed	step 9
failed	step14

9 Place the untested circuit in the control position by typing

>NEXT 1

and pressing the Enter key.

10 Test the circuit by typing

>TST

If TST	Do
passed	step11
failed	step14

11 Return to service and clear the trunk test position by typing

>RTS;NEXT

and pressing the Enter key.

12 Send any faulty cards for repair according to local procedure.

13 Record the following items in office records:

- date the card was replaced
- serial number of the card
- symptoms that prompted replacement of the card

Go to step 15.

14 Obtain further assistance in replacing this card by contacting the personnel responsible for higher level of support.

15 You have completed this procedure.

NT2X90 in an OPM RMM

Application

Use this procedure to replace the following card in an RMM.

PEC	Suffixes	Name
NT2X90	AB, AC, AD	Incoming/outgoing Transmission Test Trunk Circuit (TTT)

Common procedures

None

Action

The following flowchart is a summary of the procedure. To replace the card, use the instructions in the procedure that follows the flowchart.

NT2X90 in an OPM RMM (continued)

Summary of card replacement procedure for an NT2X90 card in an RMM

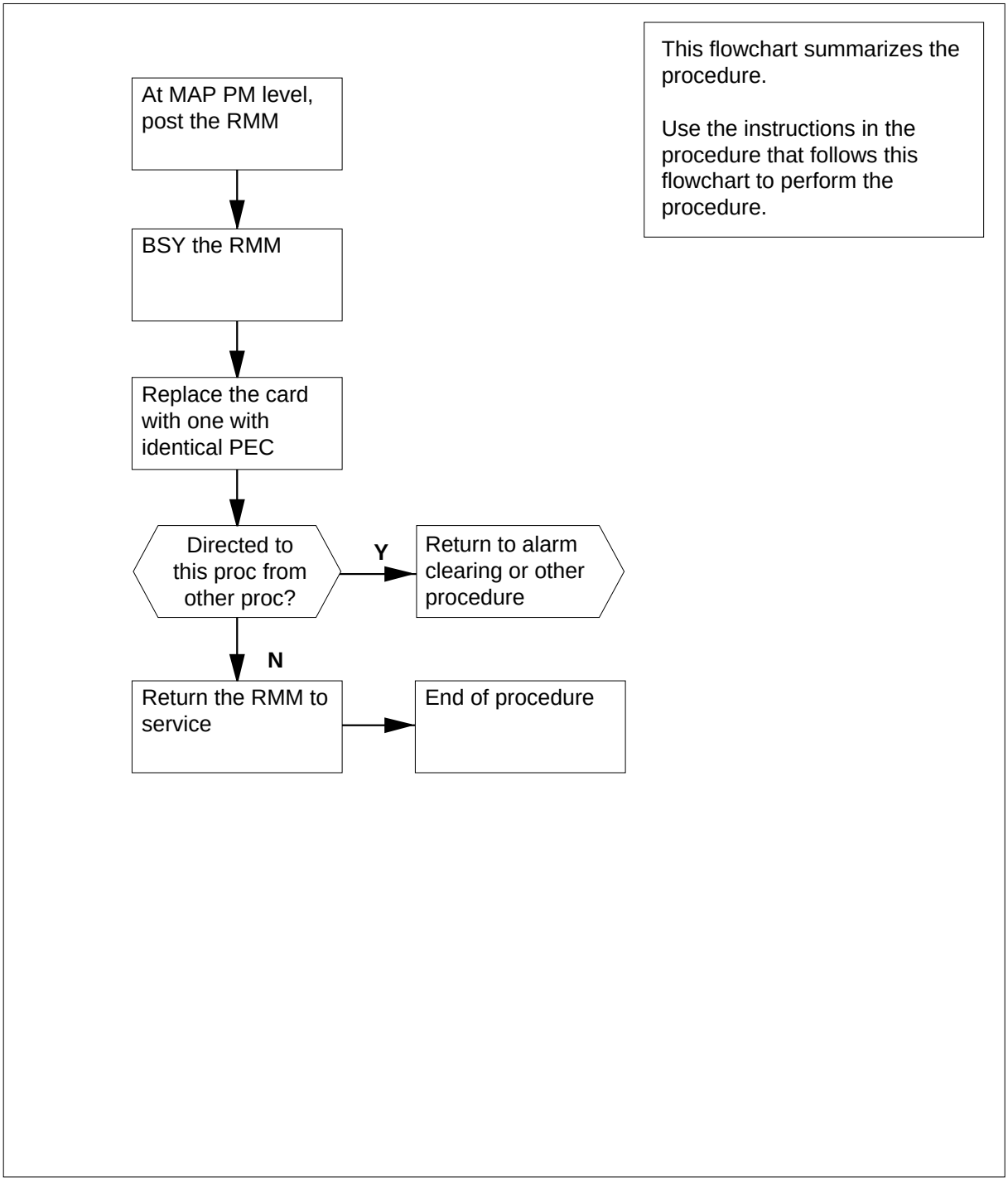

Replacing an NT2X90 card in an RMM

At your current location

1 Proceed only if you were either directed to this card replacement procedure from a step in a maintenance procedure, are using the procedure to verify or accept cards, were directed to this procedure by your maintenance support group.

2 Obtain a replacement card. Ensure that the replacement card has the same product equipment code (PEC) including suffix, as the card to be removed.

At the MAP display

3 Access the PM level and post the RMM by typing

>MAPCI;MTC;PM;POST RMM rmm_no

and pressing the Enter key.

where

rmm_no
is the number of the RMM from which the card is to be removed

Example of a MAP display:

```
   CM    MS    IOD    Net    PM    CCS    LNS    Trks    Ext    APPL
   .     .      .      .    4SysB   .      .       .      .      .

RMM               SysB     ManB     OffL     CBsy     ISTb      InSv
 0 Quit    PM        4        0       10        3        3       130
 2 Post_   RMM       0        1        1        0        0         2
 3
 4         RMM  5  INSV
 5 Trnsl
 6 Tst
 7 Bsy
 8 RTS
 9 OffL
10 LoadPM
11 Disp_
12 Next
13
14 QueryPM
15
16
17
18
```

4 Busy the RMM by typing

>BSY

and pressing the Enter key.

NT2X90 in an OPM RMM (continued)

Example of a MAP display:

```
   CM    MS    IOD    Net    PM    CCS    LNS    Trks    Ext    APPL
   .     .      .      .    4SysB   .      .       .      .      .

RMM              SysB     ManB     OffL     CBsy     ISTb      InSv
 0 Quit    PM       4        0       10        3        3       130
 2 Post_   RMM      0        1        1        0        0         2
 3
 4         RMM  5  ManB
 5 Trnsl
 6 Tst
 7 Bsy
 8 RTS
 9 OffL
10 LoadPM
11 Disp_
12 Next
13
14 QueryPM
15
16
17
18
```

At the RMM shelf

5

CAUTION
Static discharge may cause damage to circuit packs
Put on a wrist strap and connect it to the frame of the RMM before removing or inserting any cards. This protects the RMM against service degradation caused by static electricity.

Put on a wrist strap.

6 Remove the NT2X90 card as shown in the following figures.

a Locate the card to be removed on the appropriate shelf.

NT2X90
in an OPM RMM (continued)

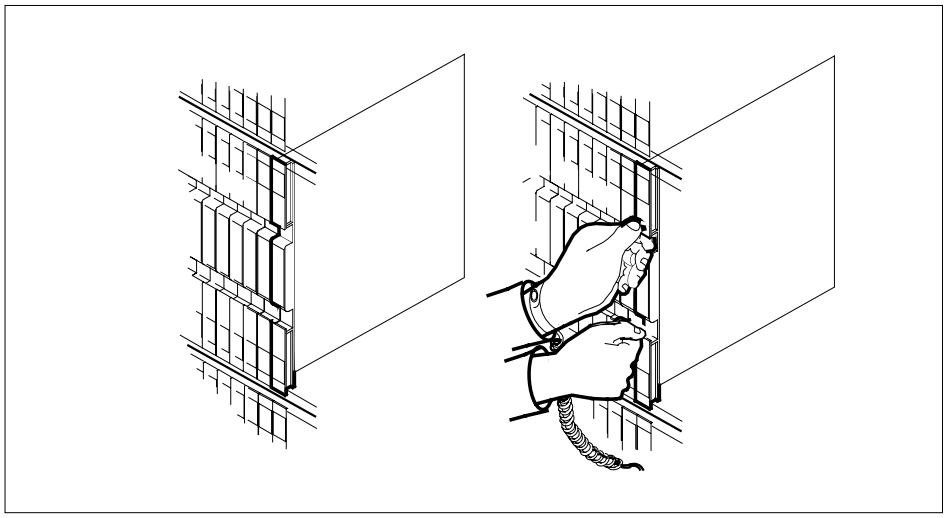

b Open the locking levers on the card to be replaced and gently pull the card towards you until it clears the shelf.

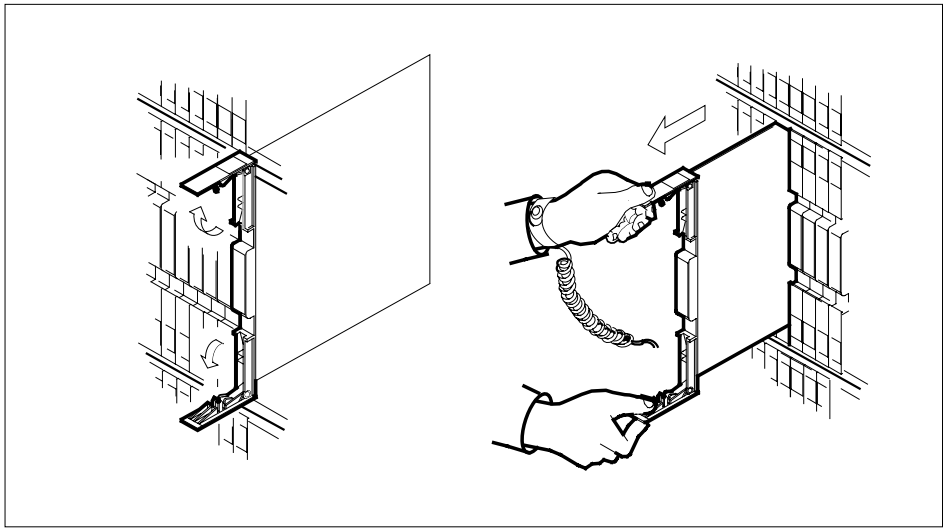

c Ensure that the replacement card has the same PEC including suffix, as the card you just removed.

NT2X90
in an OPM RMM (continued)

7

DANGER
Equipment damage
Take these precautions when removing or inserting a card:1. Do not apply direct pressure to the components.2 .Do not force the cards into the slots.

Open the locking levers on the replacement card.

Align the card with the slots in the shelf and gently slide the card into the shelf.

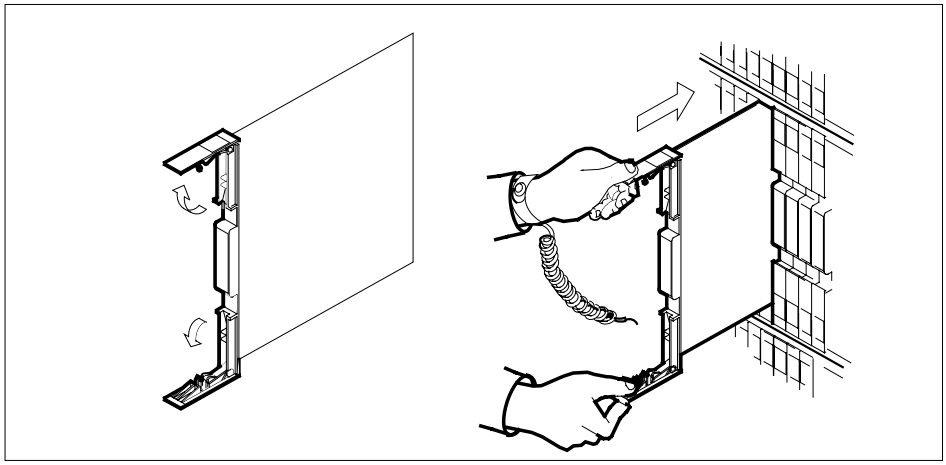

8 Seat and lock the card.

a Using your fingers or thumbs, push on the upper and lower edges of the faceplate to ensure that the card is fully seated in the shelf.

b Close the locking levers.

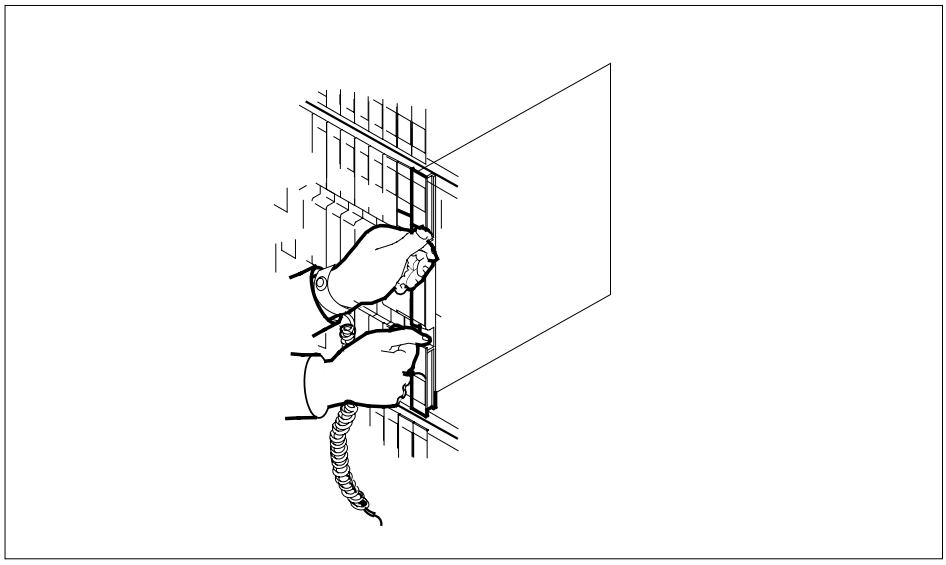

9 Use the following information to determine the next step in this procedure.

If you entered this procedure	Do
from an alarm clearing procedure	step 15
from other	step 10

At the MAP display

10 Test the RMM by typing

>TST

and pressing the Enter key.

Example of a MAP response:

```
Test Passed
    or
Test Failed
```

If the TST	Do
passes	step 11
fails	step 16

11 Return the RMM to service by typing

>RTS

NT2X90 in an OPM RMM (end)

and pressing the Enter key.

If the RTS	Do
passes	step 12
fails	step 16

12 Send any faulty cards for repair according to local procedure.

13 Record the following items in office records:

- date the card was replaced
- serial number of the card
- symptoms that prompted replacement of the card.

14 Go to step 17.

15 Return to the *Alarm Clearing Procedures* that directed you to this card replacement procedure. If necessary, go to the point where the faulty card list was produced, identify the next faulty card on the list, and go to the appropriate replacement procedure in this manual for that card.

16 Obtain further assistance in replacing this card by contacting personnel responsible for higher level of support.

17 You have successfully completed this procedure. Return to the maintenance procedure that directed you to this card replacement procedure and continue as directed.

NT2X90 in an RLCM-EDC RMM

Application

Use this procedure to replace the card that follows in the shelves or frames that appear in the table that follows.

PEC	Suffixes	Cardname	Shelf/frame name
NT2X90	AB, AC, AD	Incoming/outgoing Transmission Test Trunk Circuit (TTT)	RMM/RLCC

For the card you replace, refer to the Index for a list of cards, shelves, and frames if you cannot identify:

- the PEC
- the suffix
- the shelf or frame

Use the Index documented in this maintenance manual.

Common procedures

The common replacing a card procedure is referenced in this procedure.

Action

The flowchart that follows is only a summary of the procedure. To replace the card, use the instructions in the step-action procedure that follows.

NT2X90
in an RLCM-EDC RMM (continued)

Summary of Replacing an NT2X90 card in an RMM

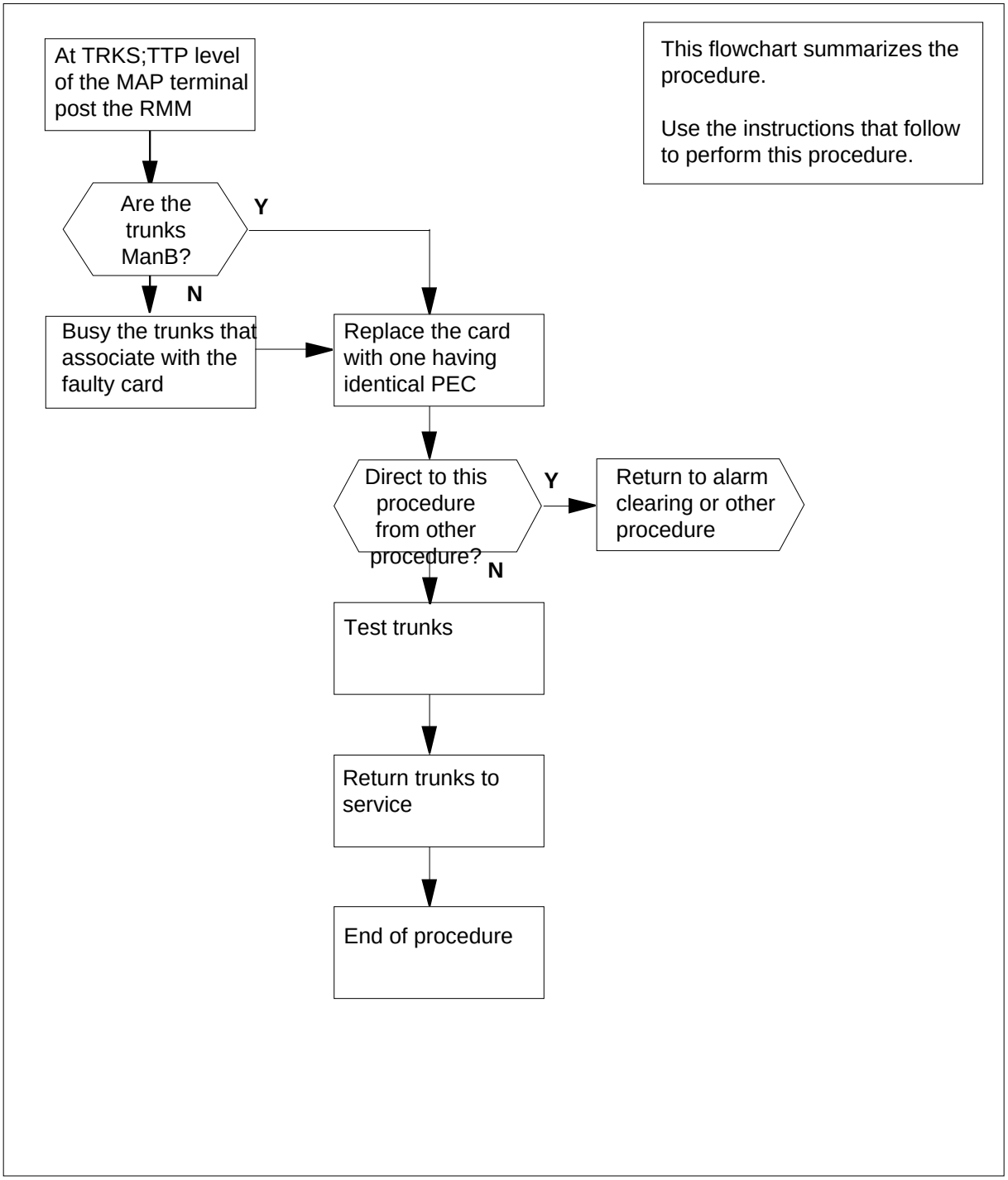

NT2X90
in an RLCM-EDC RMM (continued)

Replacing an NT2X90 card in an RMM

At your current location

1 Proceed only if this card replacement procedure sent you to a step in a maintenance procedure. If you use the procedure to verify or accept cards you may proceed. You may proceed if your maintenance support group sent you to this procedure.

2 Obtain a replacement card. Make sure that the replacement card has the same product equipment code (PEC) including suffix as the card you remove.

At the MAP display

3 To access the TTP level of the MAP display and post the trunk circuits that associate with the card you replace, type:

`>MAPCI;MTC;TRKS;TTP;POST P RMM rmm_no ckt_no ckt_no`

and press the Enter key.

where

rmm_no
is the number of the RMM that contains the card you replaced

ckt_no
is the number of the first circuit that associates with the defective card

ckt_no
is the number of the last circuit that associates with the defective card

Example of a MAP response:

```
LAST CIRCUIT = 27
POST CKT IDLED
SHORT CLLI IS:  MONTALK
OK, CLLI POSTED

POST       DELQ       BUSY Q          DIG
TTP 6-006
CKT TYPE   PM NO.     COM LANG        STA S R DOT TE R
OG         RMM 0 0     MONTALK  21    LO
                                       P_IDL
```

4 To make sure you pull the correct card from the correct card slot, type:

`>CKTLOC`

and press the Enter key.

NT2X90
in an RLCM-EDC RMM (continued)

5 To busy the trunk circuits that associate with the defective card you replace, type:

>BSY ALL

and press the Enter key.

At the RMM shelf

6

WARNING
Static discharge may cause damage to circuit packs
Connect a wrist strap to the frame of the RMM before you remove or insert any cards. This protects the RMM against service degradation that static electricity causes.

Put on a wrist strap.

7 To replace the NT2X90 card use the common replacing a card procedure in this document. When you complete the procedure, return to this point.

8 Use the information that follows to determine the next step in this procedure.

If you enter this procedure	Do
from an alarm clearing procedure	step 18
from other	step 9

At the MAP display

9 To post the trunk circuits that associate with the new NT2X90 card, type:

>POST P RMM rmm_no ckt_no ckt_no

and press the Enter key.

where

rmm_no
is the number of the RMM that contains the new NT2X90 card

ckt_no
is the number of the first circuit that associates with the new card

ckt_no
is the number of the last circuit that associates with the new card

Example of a MAP response:

```
LAST CIRCUIT = 27
POST CKT IDLED
SHORT CLLI IS:  MONTALK
OK, CLLI POSTED

POST       DELQ       BUSY Q          DIG
TTP 6-006
CKT TYPE   PM NO.     COM LANG        STA S R DOT TE R
OG         RMM 0 0     MONTALK  21    MB
```

10 To place the first circuit on hold and test the second circuit, type:

>HOLD

and press the Enter key,

and then type

>TST

and press the Enter key

If the TST	Do
passed	step 11
failed	step 19

11 To return the tested circuit to service, type:

>RTS

and press the Enter key.

If the RTS	Do
passed	step 12
failed	step 19

12 To place the not tested circuit in the control position, type:

>NEXT 1

and press the Enter key.

13 To test the circuit, type

>TST

If the TST	Do
passed	step 14
failed	step 19

NT2X90
in an RLCM-EDC RMM (end)

14 To return to service and clear the trunk test position, type:

```
>RTS;NEXT
```

and press the Enter key.

15 Send any faulty cards for repair according to local procedure.

16 Record the items that follow in office records:

- date you replace the card
- serial number of the card
- problems for the replacement of the card

17 Go to step 20.

18 Return to the *Alarm clearing procedures* that sent you to this card replacement procedure. Go to the point where the system produced the damaged card list and identify the next damaged card on the list. Proceed to the correct replacement procedure in this manual for the card.

19 For additional help with the replacement of this card, contact the next level of support.

20 The procedure is complete. Return to the maintenance procedure.

NT2X90 in an RLCM RMM

Application

Use this procedure to replace the following card in an RMM.

PEC	Suffixes	Name
NT2X90	AB, AC, AD	Incoming/outgoing Transmission Test Trunk Circuit (TTT)

Common procedures

The common replacing a card procedure is referenced in this procedure.

Action

The following flowchart is a summary of the procedure. To replace the card, use the instructions in the procedure that follows the flowchart.

NT2X90 in an RLCM RMM (continued)

Summary of card replacement procedure for an NT2X90 card in an RMM

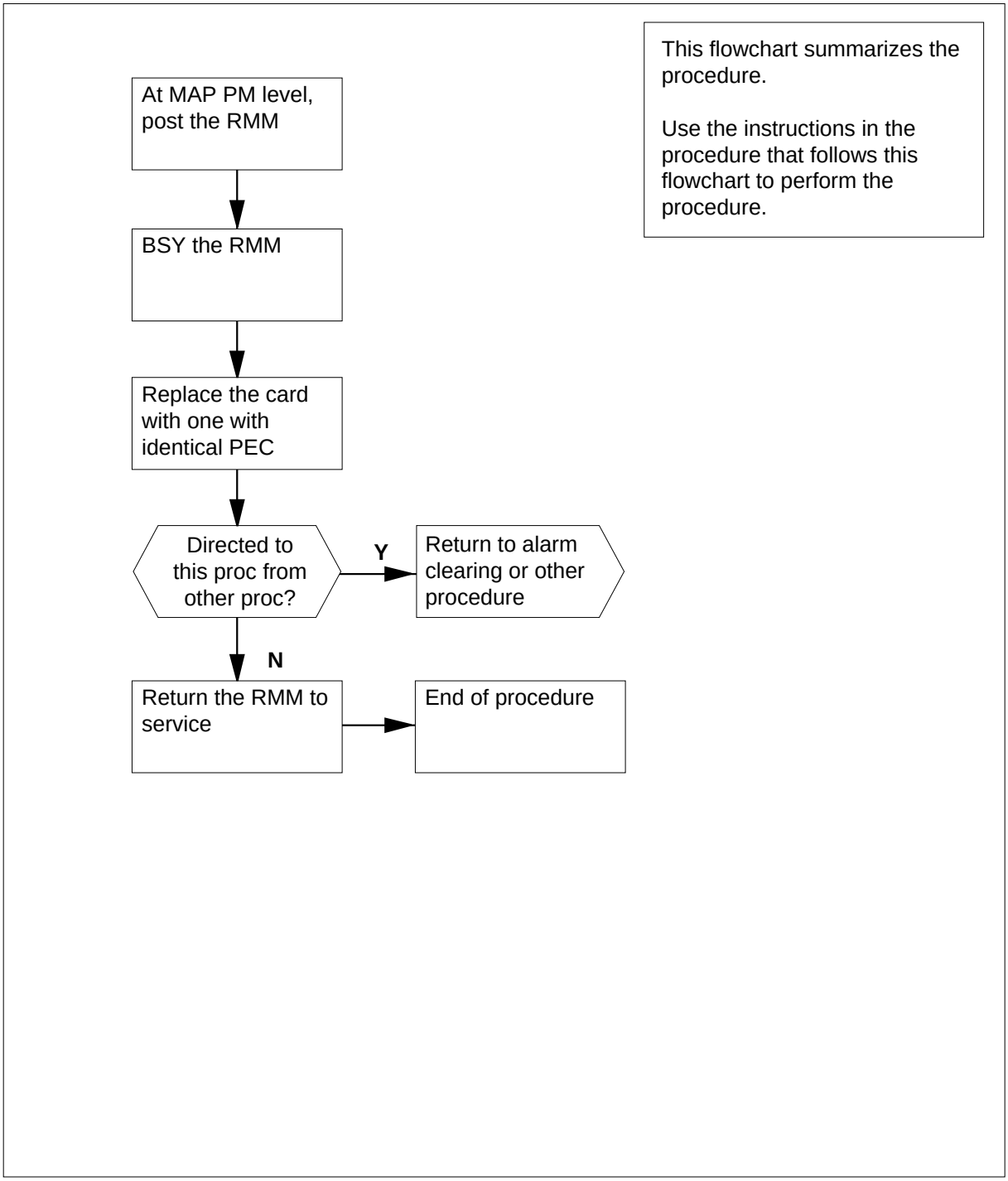

Replacing an NT2X90 card in an RMM

At your current location

1 Proceed only if you were either directed to this card replacement procedure from a step in a maintenance procedure, are using the procedure to verify or accept cards, or were directed to this procedure by your maintenance support group.

2 Obtain a replacement card. Ensure that the replacement card has the same product equipment code (PEC) including suffix, as the card to be removed.

At the MAP display

3 Access the PM level and post the RMM by typing

>MAPCI;MTC;PM;POST RMM rmm_no

and pressing the Enter key.

where

rmm_no
is the number of the RMM from which the card is to be removed

Example of a MAP display:

```
   CM    MS    IOD    Net    PM    CCS    LNS    Trks    Ext    APPL
   .     .      .      .    4SysB   .      .       .      .      .

RMM               SysB     ManB     OffL     CBsy     ISTb      InSv
 0 Quit    PM        4        0       10        3        3       130
 2 Post_   RMM       0        1        1        0        0         2
 3
 4         RMM  5  ISTb
 5 Trnsl
 6 Tst
 7 Bsy
 8 RTS
 9 OffL
10 LoadPM
11 Disp_
12 Next
13
14 QueryPM
15
16
17
18
```

4 Busy the RMM by typing

>BSY

and pressing the Enter key.

NT2X90
in an RLCM RMM (continued)

Example of a MAP display:

```
   CM    MS    IOD    Net    PM    CCS    LNS    Trks    Ext    APPL
   .     .      .      .    4SysB   .      .       .      .      .

RMM              SysB     ManB     OffL     CBsy     ISTb      InSv
 0 Quit    PM       4        0       10        3        3       130
 2 Post_   RMM      0        1        1        0        0         2
 3
 4         RMM  5  ManB
 5 Trnsl
 6 Tst
 7 Bsy
 8 RTS
 9 OffL
10 LoadPM
11 Disp_
12 Next
13
14 QueryPM
15
16
17
18
```

At the RMM shelf

5

CAUTION
Static discharge may cause damage to circuit packs
Put on a wrist strap and connect it to the frame of the RMM before removing or inserting any cards. This protects the RMM against service degradation caused by static electricity.

Replace the NT2X90 card using the common replacing a card procedure in this document. When you have completed the procedure, return to this point.

6 Use the following information to determine the next step in this procedure.

If you entered this procedure	Do
from an alarm clearing procedure	step 12
from other	step 7

At the MAP display

7 Test the RMM by typing

>TST

and pressing the Enter key.

Example of a MAP response:

```
Test Passed
    or
Test Failed
```

If the TST	Do
passes	step 8
fails	step 13

8 Return the RMM to service by typing

>RTS

and pressing the Enter key.

If the RTS	Do
passes	step 9
fails	step 13

9 Send any faulty cards for repair according to local procedure.

10 Record the following items in office records:

- date the card was replaced
- serial number of the card
- symptoms that prompted replacement of the card.

11 Go to step 14.

12 Return to the *Alarm Clearing Procedures* that directed you to this card replacement procedure. If necessary, go to the point where the faulty card list was produced, identify the next faulty card on the list, and go to the appropriate replacement procedure in this manual for that card.

13 Obtain further assistance in replacing this card by contacting personnel responsible for higher level of support.

14 You have successfully completed this procedure. Return to the maintenance procedure that directed you to this card replacement procedure and continue as directed.

NT2X90 in an RSC RMM

Application

Use this procedure to replace the following card in an RSC RMM.

PEC	Suffixes	Name
NT2X90	AD	Test Trunk Circuit
NT2X90	AD	Talk monitor with NT2X77AA

Common Procedures

None

Action

The following flowchart is a summary of the procedure. To replace the card, use the instructions in the procedure that follows the flowchart.

NT2X90
in an RSC RMM (continued)

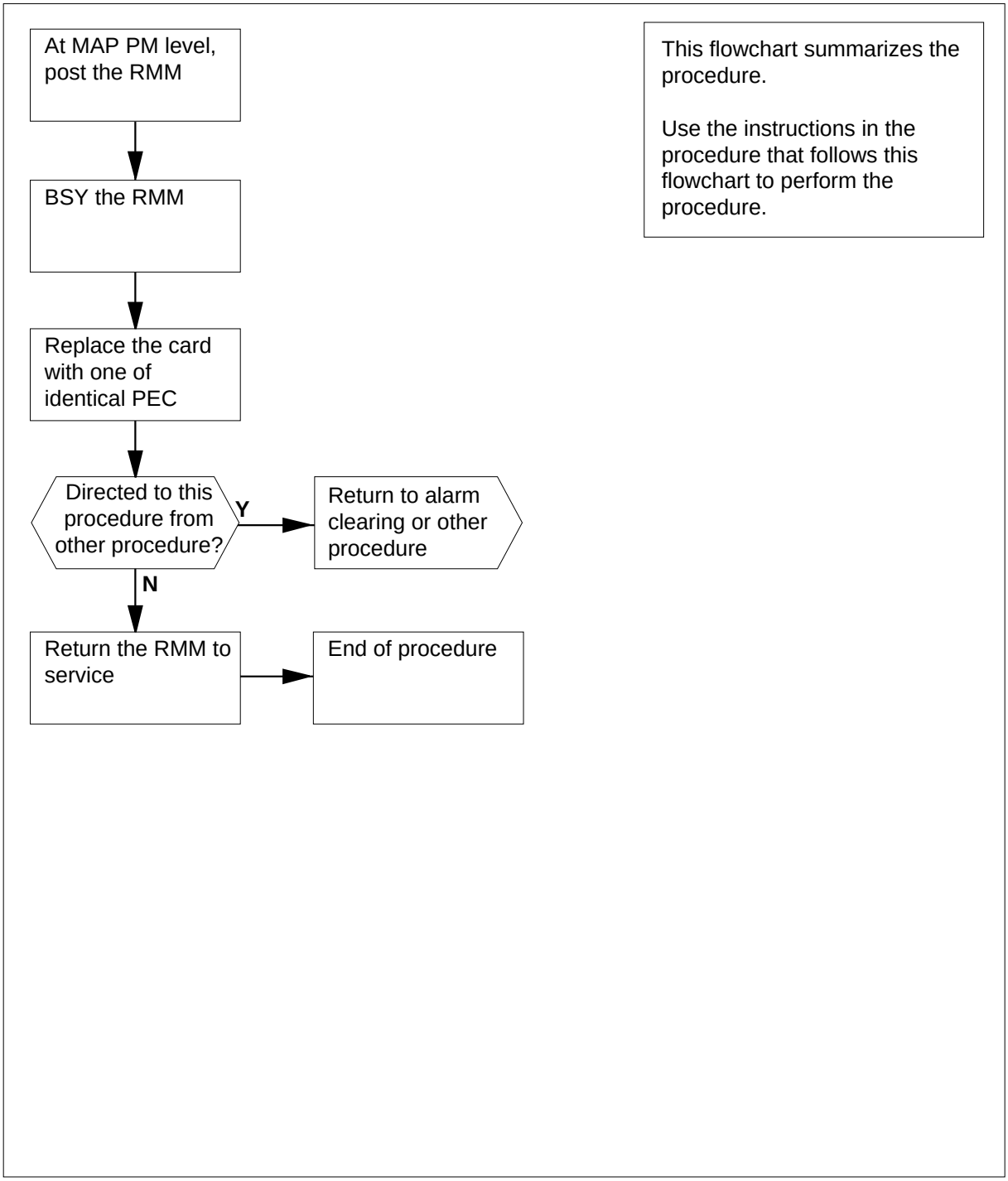

NT2X90
in an RSC RMM (continued)

Replacing an NT2X90 card in an RSC RMM

At your current location

1 Proceed only if you were either directed to this card replacement procedure from a step in a maintenance procedure, are using the procedure to verify or accept cards, or were directed to this procedure by your maintenance support group.

2 Obtain a replacement card. Ensure the replacement card has the same product equipment code (PEC) including suffix, as the card to be removed.

At the MAP display

3 Access the PM level and post the RMM by typing

>MAPCI;MTC;PM;POST RMM rmm_no

and pressing the Enter key.

where

rmm_no
is the number of the RMM from which the card is to be removed

Example of a MAP display:

```
   CM    MS    IOD    Net    PM    CCS    LNS    Trks    Ext    APPL
   .     .      .      .    4SysB   .      .       .      .      .

RMM               SysB     ManB     OffL     CBsy     ISTb      InSv
 0 Quit    PM        4        0       10        3        3       130
 2 Post_   RMM       0        1        1        0        0         2
 3
 4         RMM  5  INSV
 5 Trnsl
 6 Tst
 7 Bsy
 8 RTS
 9 OffL
10 LoadPM
11 Disp_
12 Next
13
14 QueryPM
15
16
17
18
```

4 Busy the RMM by typing

>BSY

and pressing the Enter key.

NT2X90 in an RSC RMM (continued)

Example of a MAP display:

```
   CM    MS    IOD    Net    PM    CCS    LNS    Trks    Ext    APPL
   .     .      .      .    4SysB   .      .       .      .      .

RMM              SysB     ManB     OffL     CBsy     ISTb      InSv
 0 Quit    PM       4        0       10        3        3       130
 2 Post_   RMM      0        1        1        0        0         2
 3
 4         RMM  5  ManB
 5 Trnsl
 6 Tst
 7 Bsy
 8 RTS
 9 OffL
10 LoadPM
11 Disp_
12 Next
13
14 QueryPM
15
16
17
18
```

At the RMM shelf

5

CAUTION
Static discharge may cause damage to circuit packs
Put on a wrist strap and connect it to the frame of the RMM before removing or inserting any cards. This protects the RMM against service degradation caused by static electricity.

Put on a wrist strap.

6 Remove the NT2X90 card as shown in the following figures.

a Locate the card to be removed on the appropriate shelf.

NT2X90
in an RSC RMM (continued)

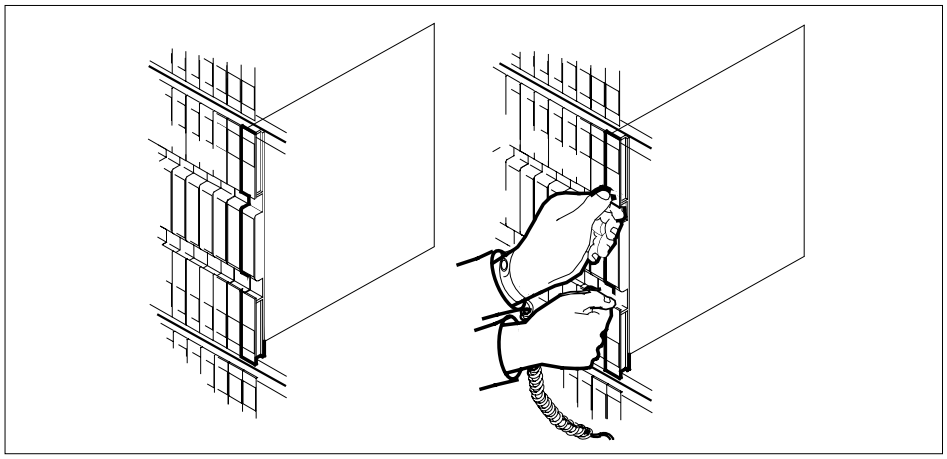

b Open the locking levers on the card to be replaced and gently pull the card towards you until it clears the shelf.

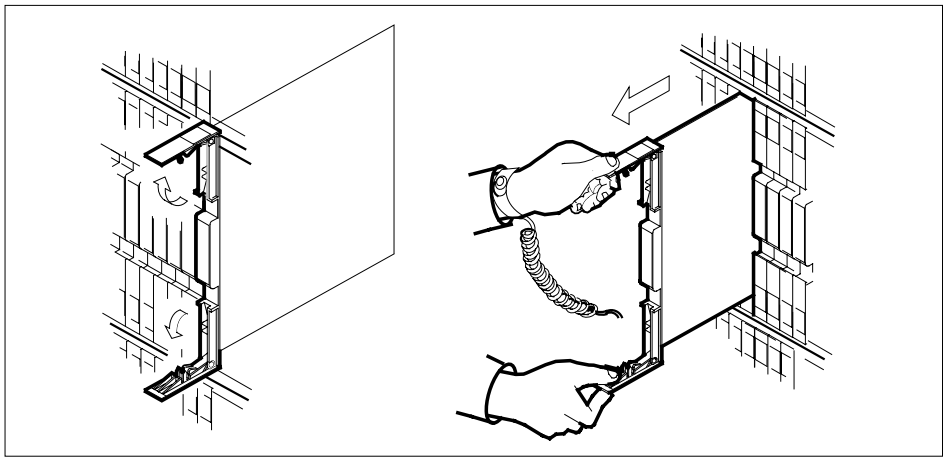

c Ensure the replacement card has the same PEC, including suffix, as the card you just removed.

7

DANGER

Equipment damage

Take these precautions when removing or inserting a card:

1. Do not apply direct pressure to the components.
2. Do not force the cards into the slots.

Open the locking levers on the replacement card.

a Align the card with the slots in the shelf and gently slide the card into the shelf.

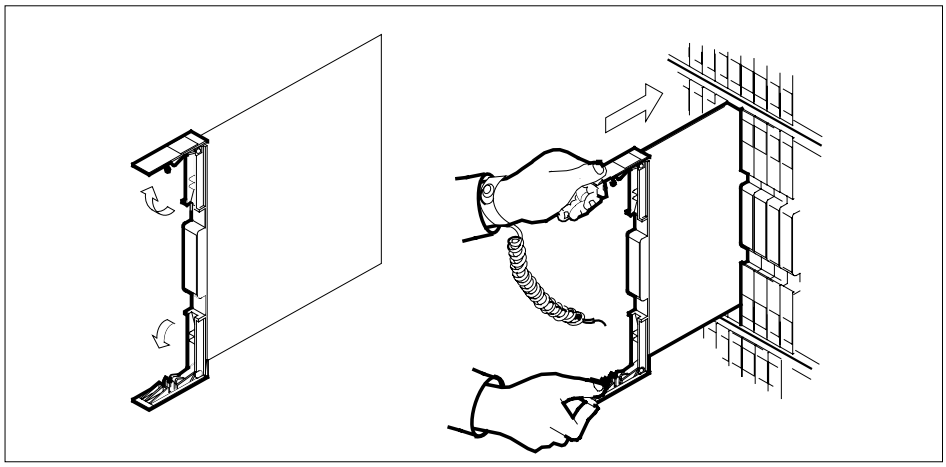

8 Seat and lock the card.

a Using your fingers or thumbs, push on the upper and lower edges of the faceplate to ensure the card is fully seated in the shelf.

b Close the locking levers.

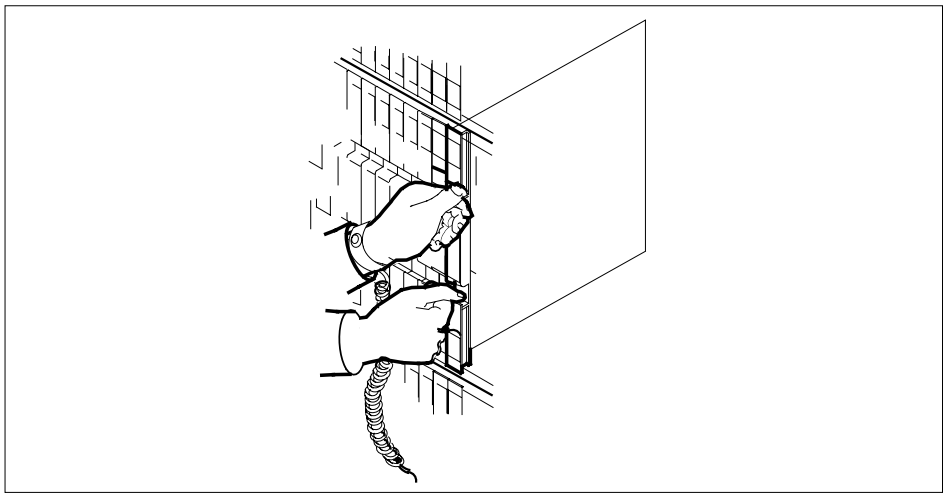

9 Use the following information to determine the next step in this procedure.

If you entered this procedure from	Do
an alarm clearing procedure	step 14
other	step 10

NT2X90
in an RSC RMM (end)

10 Return the RMM to service by typing

>RTS

and pressing the Enter key.

If the RTS	Do
passed	step 11
failed	step 15

11 Send any faulty cards for repair according to local procedure.

12 Record the following items in office records:

- date the card was replaced
- serial number of the card
- symptoms that prompted replacement of the card.

13 Go to step 16.

14 Return to the *Alarm Clearing Procedure* that directed you to this card replacement procedure. If necessary, go to the point where the faulty card list was produced, identify the next faulty card on the list, and go to the appropriate replacement procedure in this manual for that card.

15 Obtain further assistance in replacing this card by contacting personnel responsible for higher level of support.

16 You have successfully completed this procedure. Return to the maintenance procedure that directed you to this card replacement procedure and continue as directed.

NT2X90 in an RSC-S (DS-1) Model A RMM

Application

Use this procedure to replace an NT2X90 card in an RSC-S RMM.

PEC	Suffixes	Name
NT2X90	AD	Test Trunk Circuit

Common procedures

None

Action

The following flowchart is only a summary of the procedure. To replace the card, use the instructions in the procedure that follows the flowchart.

NT2X90
in an RSC-S (DS-1) Model A RMM (continued)

Summary of card replacement procedure for an NT2X90 card in RSC-S RMM

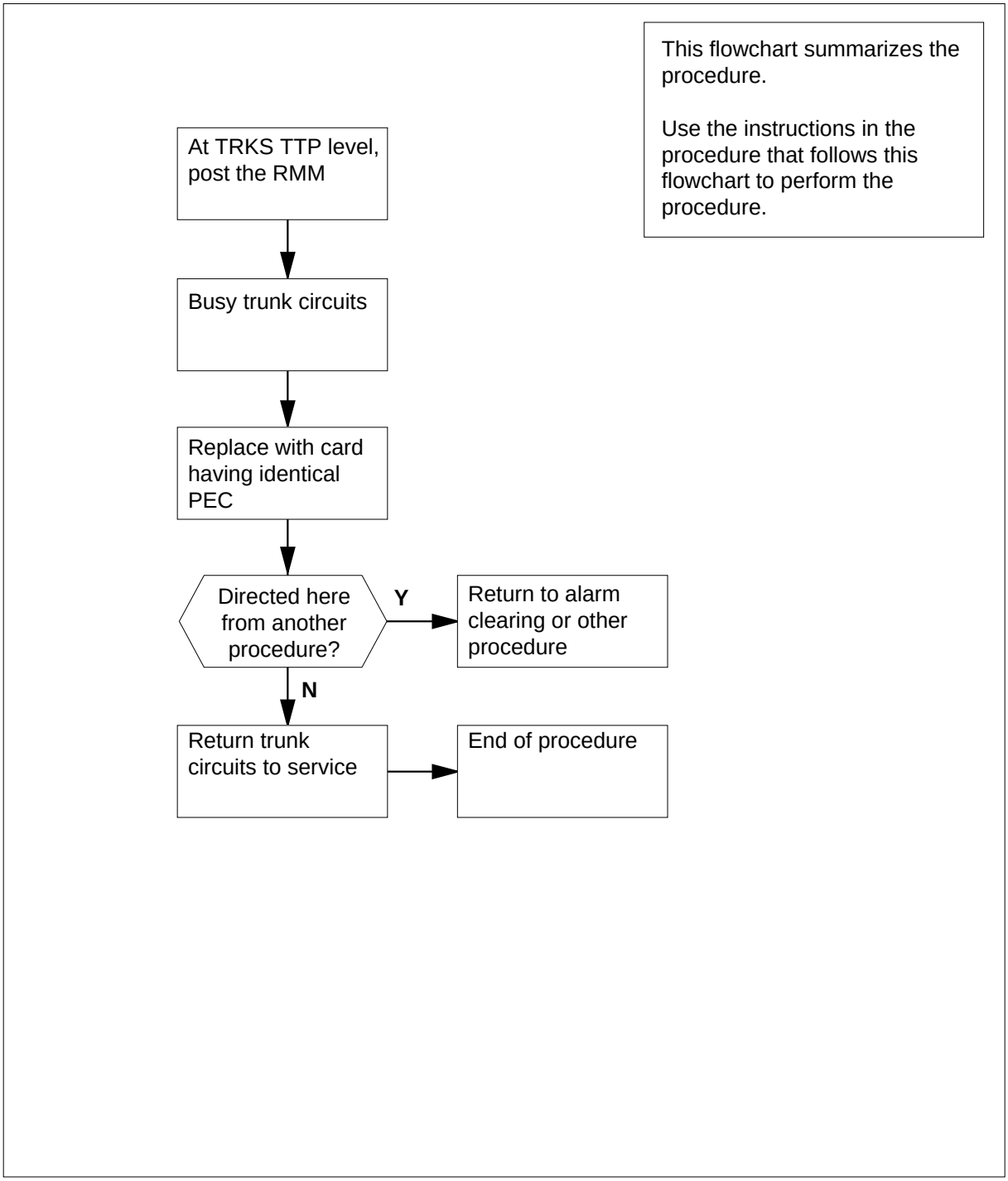

NT2X90 in an RSC-S (DS-1) Model A RMM (continued)

Replacing an NT2X90 card in RSC-S RMM

At your Current Location

1 Proceed only if you have been directed to this card replacement procedure from a step in a maintenance procedure, are using the procedure for verifying or accepting cards, or have been directed to this procedure by your maintenance support group.

2 Obtain an NT2X90 replacement card. Ensure the replacement card has the same product equipment code (PEC), including suffix, as the card that is to be removed.

At the MAP terminal

3 Set the MAP display to the TTP level and post the RMM by typing

>MAPCI;MTC;TRKS;TTP;POST P RMM

and pressing the Enter key.

Example of a MAP display:

```
 CM    MS    IOD    Net    PM    CCS    LNS    Trks    Ext    Appl
  .     .     .      .      .     .      .      .       .      .

TTP
 0 Quit     POST                 DELQ         BUSYQ          DIG
 2 Post_    TTP    6-018
 3 Seize_   CKT TYPE   PM NO.  COM LANG   STA  S  R  DOT TE RESULT
 4          OG      RMM  0  20      MLT          0 IDL
 5 Bsy_
 6 RTS_
 7 Tst_
 8
 9 CktInfo
10 CktLoc
11 Hold
12 Next_
13 Rls_
14 Ckt_
15 Trnslvf_
16 Stksdr_
17 Pads_
18 Level_
```

4 Busy the trunk circuit on the RMM by typing

>BSY;BSY;INB;ALL

and pressing the Enter key.

Example of a MAP display:

NT2X90
in an RSC-S (DS-1) Model A RMM (continued)

```
 CM    MS    IOD    Net    PM    CCS    LNS    Trks    Ext    Appl
 .     .     .      .      .     .      .      .       .      .

TTP
 0 Quit     POST              DELQ       BUSYQ        DIG
 2 Post_    TTP    6-018
 3 Seize_   CKT TYPE   PM NO.    COM LANG   STA  S  R  DOT TE RESULT
 4            OG      RMM  0  20      MLT          0 INB
 5 Bsy_
 6 RTS_
 7 Tst_
 8
 9 CktInfo
10 CktLoc
11 Hold
12 Next_
13 Rls_
14 Ckt_
15 Trnslvf_
16 Stksdr_
17 Pads_
18 Level_
```

At the RMM shelf

5

CAUTION
Static discharge may cause damage to circuit packs
Put on a wrist strap and connect it to the frame of the RMM before removing any cards. This protects the RMM against service degradation caused by static electricity.

Put on a wrist strap.

6 Remove the NT2X90 card as shown in the following figures.

a Locate the card to be removed on the appropriate shelf.

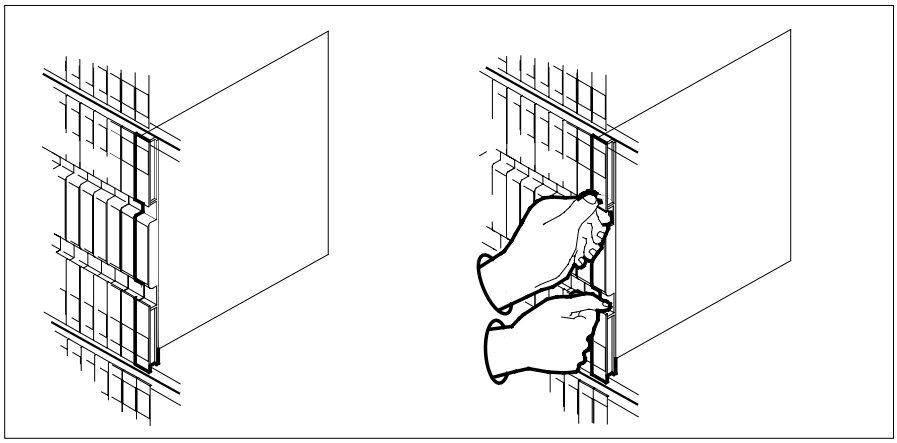

b Open the locking levers on the card to be replaced and gently pull the card toward you until it clears the shelf.

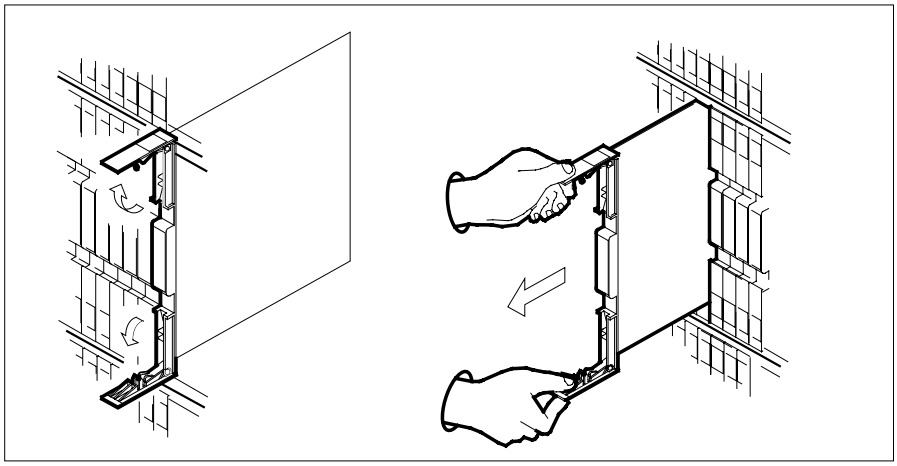

c Ensure the replacement card has the same PEC, including suffix, as the card you just removed.

7 Open the locking levers on the replacement card.

a Align the card with the slots in the shelf.

b Gently slide the card into the shelf.

NT2X90
in an RSC-S (DS-1) Model A RMM (continued)

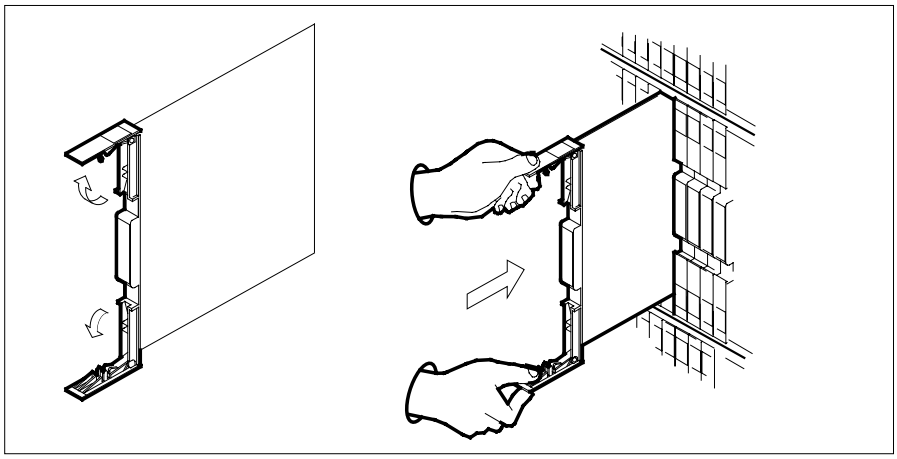

8

DANGER
Equipment damage
Take these precautions when removing or inserting a card:

1. Do not apply direct pressure to the components.
2. Do not force the card into the slot.

Seat and lock the card.

a Using your fingers or thumbs, push on the upper and lower edges of the faceplate to ensure the card is fully seated in the shelf.

b Close the locking levers.

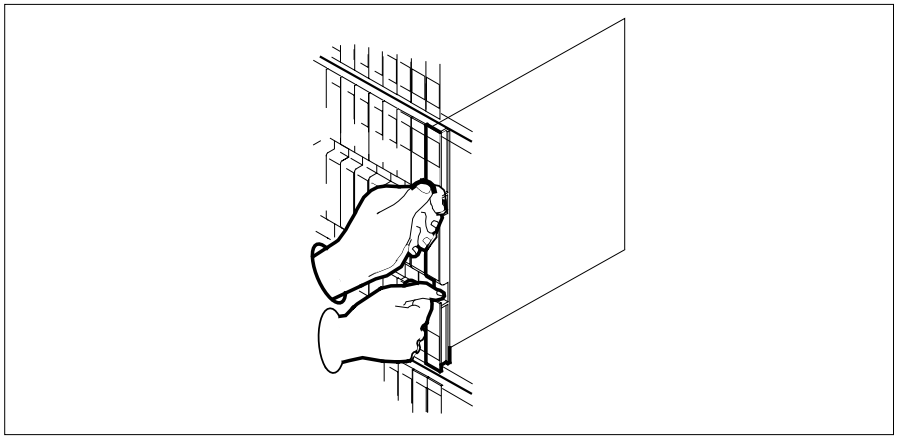

NT2X90 in an RSC-S (DS-1) Model A RMM (end)

9 Use the following information to determine where to proceed.

If you entered this procedure from	Do
alarm clearing procedures	step 14
other	step 10

At the MAP terminal

10 Test the RMM by typing

>TST

and pressing the Enter key.

If TST	Do
passed	step 11
failed	step 14

11 Return the RMM to service by typing

>RTS

and pressing the Enter key.

If RTS	Do
passed	step 12
failed	step 15

12 Send any faulty cards for repair according to local procedure.

13 Record the date the card was replaced, the serial number of the card, and the symptoms that prompted replacement of the card. Go to step 16.

14 Return to the procedure that directed you to this procedure. At the point where a faulty card list was produced, identify the next faulty card on the list and go to the appropriate card replacement procedure for that card in this manual.

15 Obtain further assistance in replacing this card by contacting operating company maintenance personnel.

16 You have successfully completed this procedure. Return to the maintenance procedure that directed you to this card replacement procedure and continue as directed.

NT2X90 in an RSC-S (DS-1) Model B RMM

Application

Use this procedure to replace an NT2X90 card in an RSC-S RMM.

PEC	Suffixes	Name
NT2X90	AD	Test Trunk Circuit

Common procedures

None

Action

The following flowchart is only a summary of the procedure. To replace the card, use the instructions in the procedure that follows the flowchart.

NT2X90
in an RSC-S (DS-1) Model B RMM (continued)

Summary of card replacement procedure for an NT2X90 card in RSC-S RMM

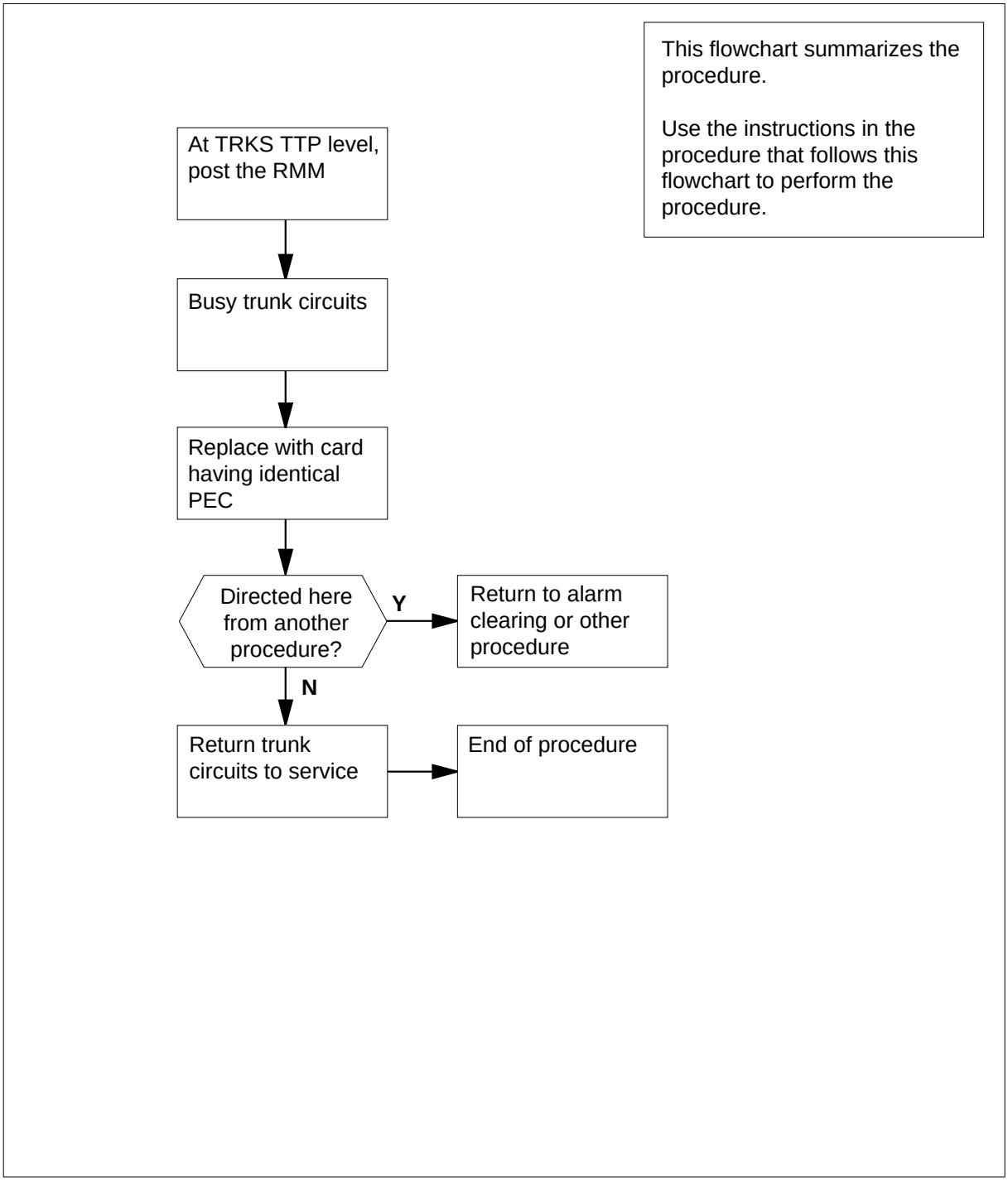

NT2X90 in an RSC-S (DS-1) Model B RMM (continued)

Replacing an NT2X90 card in RSC-S RMM

At your Current Location

1 Proceed only if you have been directed to this card replacement procedure from a step in a maintenance procedure, are using the procedure for verifying or accepting cards, or have been directed to this procedure by your maintenance support group.

2 Obtain an NT2X90 replacement card. Ensure the replacement card has the same product equipment code (PEC), including suffix, as the card that is to be removed.

At the MAP terminal

3 Set the MAP display to the TTP level and post the RMM by typing

>MAPCI;MTC;TRKS;TTP;POST P RMM

and pressing the Enter key.

Example of a MAP display:

```
 CM    MS    IOD    Net    PM    CCS    LNS    Trks    Ext    Appl
 .      .      .      .     .     .       .      .       .       .

TTP
 0 Quit     POST                 DELQ         BUSYQ          DIG
 2 Post_    TTP    6-018
 3 Seize_   CKT TYPE   PM NO.  COM LANG   STA  S  R  DOT TE RESULT
 4          OG      RMM  0  20      MLT          0 IDL
 5 Bsy_
 6 RTS_
 7 Tst_
 8
 9 CktInfo
10 CktLoc
11 Hold
12 Next_
13 Rls_
14 Ckt_
15 Trnslvf_
16 Stksdr_
17 Pads_
18 Level_
```

4 Busy the trunk circuit on the RMM by typing

>BSY;BSY;INB;ALL

and pressing the Enter key.

Example of a MAP display:

NT2X90
in an RSC-S (DS-1) Model B RMM (continued)

```
 CM    MS    IOD    Net    PM    CCS    LNS    Trks    Ext    Appl
 .      .      .      .     .      .      .       .      .       .

TTP
 0 Quit     POST               DELQ       BUSYQ        DIG
 2 Post_    TTP    6-018
 3 Seize_   CKT TYPE   PM NO.    COM LANG   STA  S  R  DOT TE RESULT
 4            OG      RMM  0  20      MLT          0 INB
 5 Bsy_
 6 RTS_
 7 Tst_
 8
 9 CktInfo
10 CktLoc
11 Hold
12 Next_
13 Rls_
14 Ckt_
15 Trnslvf_
16 Stksdr_
17 Pads_
18 Level_
```

At the RMM shelf

5

CAUTION
Static discharge may cause damage to circuit packs
Put on a wrist strap and connect it to the frame of the RMM before removing any cards. This protects the RMM against service degradation caused by static electricity.

Put on a wrist strap.

6 Remove the NT2X90 card as shown in the following figures.

a Locate the card to be removed on the appropriate shelf.

NT2X90
in an RSC-S (DS-1) Model B RMM (continued)

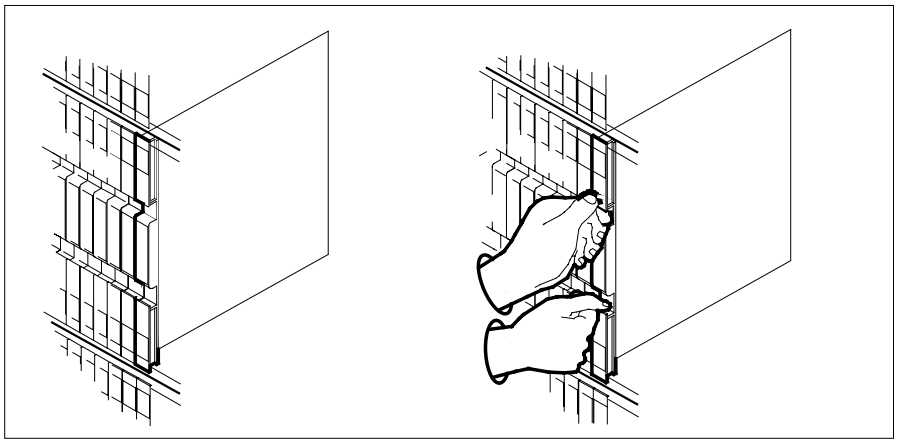

b Open the locking levers on the card to be replaced and gently pull the card toward you until it clears the shelf.

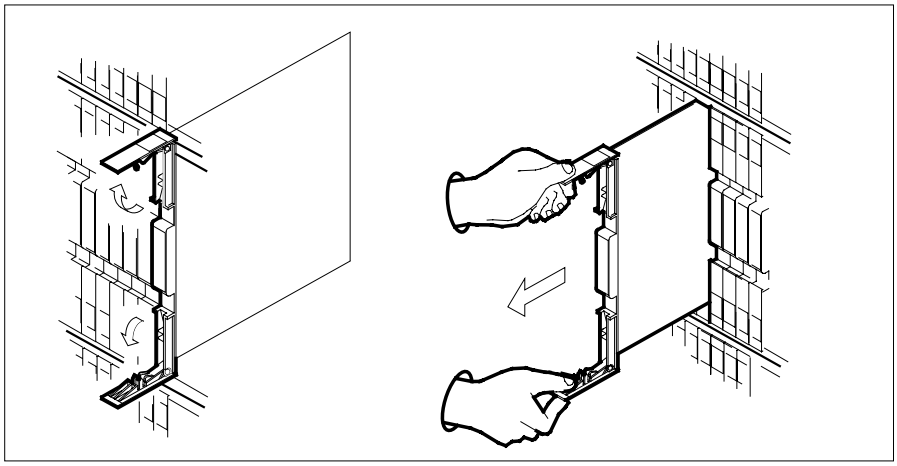

c Ensure the replacement card has the same PEC, including suffix, as the card you just removed.

7 Open the locking levers on the replacement card.

a Align the card with the slots in the shelf.

b Gently slide the card into the shelf.

NT2X90
in an RSC-S (DS-1) Model B RMM (continued)

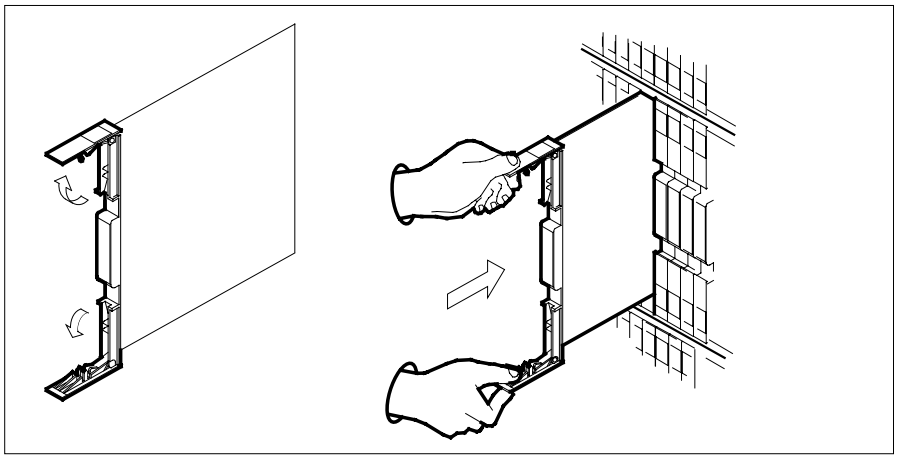

8

DANGER
Equipment damage
Take these precautions when removing or inserting a card:

1. Do not apply direct pressure to the components.
2. Do not force the card into the slot.

Seat and lock the card.

a Using your fingers or thumbs, push on the upper and lower edges of the faceplate to ensure the card is fully seated in the shelf.

b Close the locking levers.

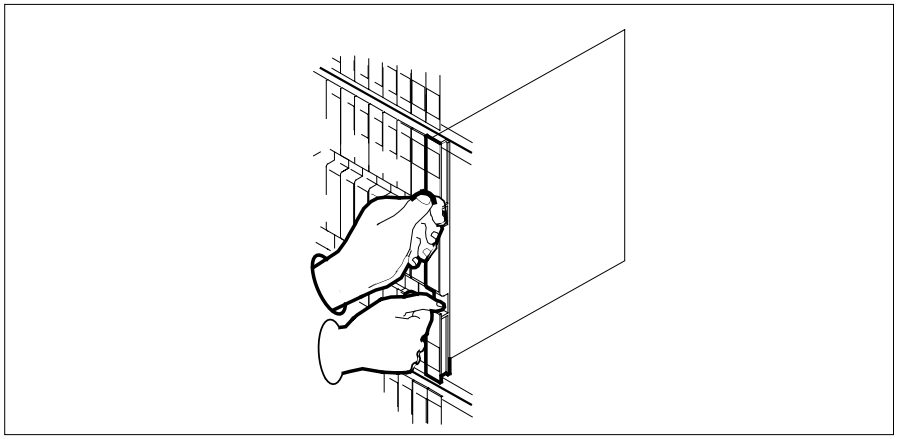

NT2X90 in an RSC-S (DS-1) Model B RMM (end)

9 Use the following information to determine where to proceed.

If you entered this procedure from	Do
alarm clearing procedures	step 14
other	step 10

At the MAP terminal

10 Test the RMM by typing

>TST

and pressing the Enter key.

If TST	Do
passed	step 11
failed	step 14

11 Return the RMM to service by typing

>RTS

and pressing the Enter key.

If RTS	Do
passed	step 12
failed	step 15

12 Send any faulty cards for repair according to local procedure.

13 Record the date the card was replaced, the serial number of the card, and the symptoms that prompted replacement of the card. Go to step 16.

14 Return to the procedure that directed you to this procedure. At the point where a faulty card list was produced, identify the next faulty card on the list and go to the appropriate card replacement procedure for that card in this manual.

15 Obtain further assistance in replacing this card by contacting operating company maintenance personnel.

16 You have successfully completed this procedure. Return to the maintenance procedure that directed you to this card replacement procedure and continue as directed.

NT3X04 in an RSC RMM

Application

Use this procedure to replace the following card in an RSC RMM.

PEC	Suffixes	Name
NT3X04	AA	Incoming test trunk for AECO local test board interface

Common Procedures

None

Action

The following flowchart is a summary of the procedure. To replace the card, use the instructions in the procedure that follows the flowchart.

NT3X04
in an RSC RMM (continued)

Summary of card replacement procedure for an NT3X04 card in an RSC RMM

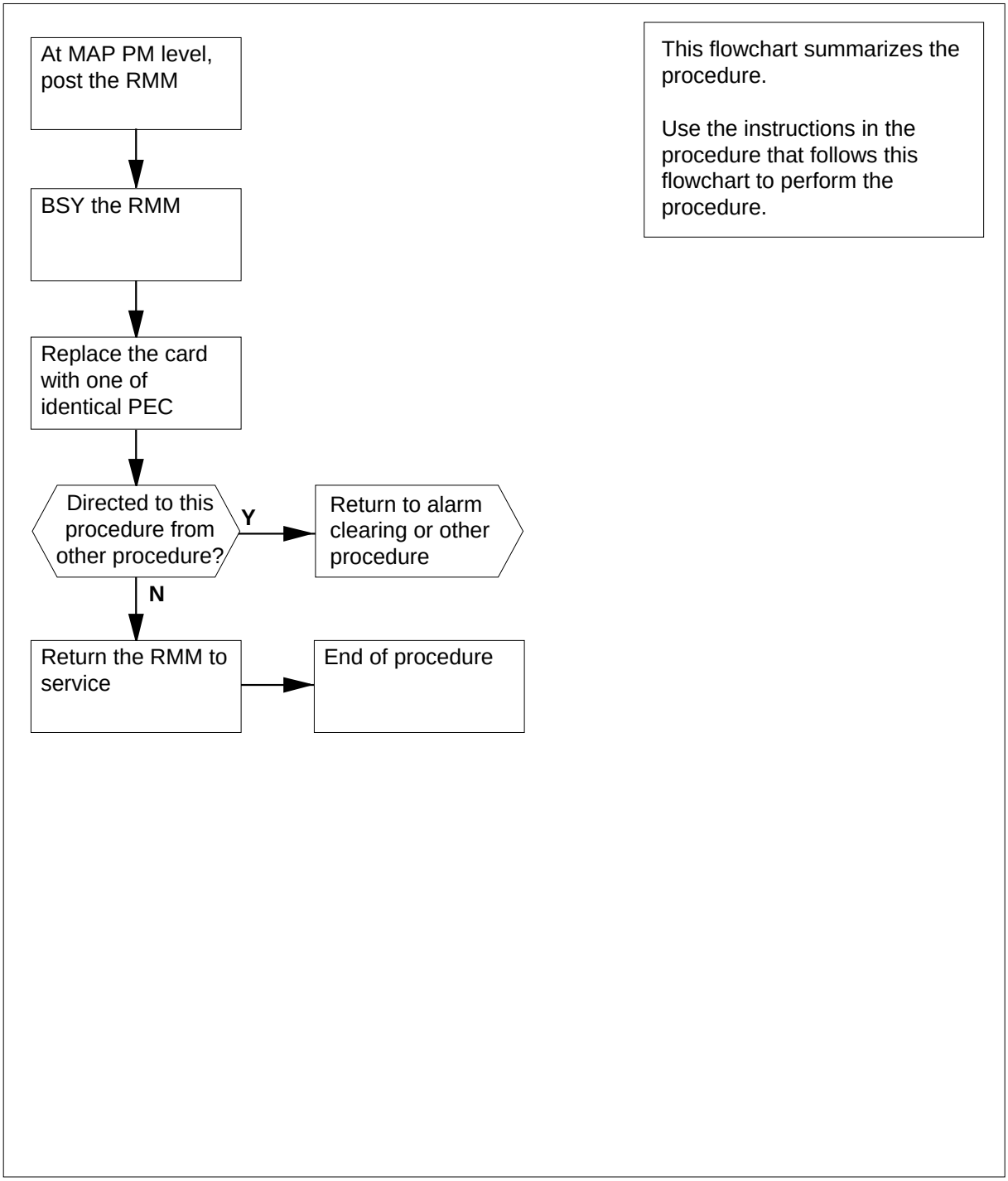

Replacing an NT3X04 card in RSC RMM

At your current location

1 Proceed only if you were either directed to this card replacement procedure from a step in a maintenance procedure, are using the procedure to verify or accept cards, or were directed to this procedure by your maintenance support group.

2 Obtain a replacement card. Ensure the replacement card has the same product equipment code (PEC) including suffix, as the card to be removed.

At the MAP display

3 Access the PM level and post the RMM by typing

>MAPCI;MTC;PM;POST RMM rmm_no

and pressing the Enter key.

where

rmm_no
is the number of the RMM from which the card is to be removed

Example of a MAP display:

```
   CM    MS    IOD    Net    PM    CCS    LNS    Trks    Ext    APPL
    .     .     .      .    4SysB   .      .       .       .       .
                                                  *C*
RMM                   SysB     ManB     OffL     CBsy     ISTb     InSv
 0 Quit          PM      4        0       10        3        3      130
 2 Post_        RMM      4        1        1        0        0        2
 3
 4                  RMM  5  INSV
 5 Trnsl
 6 Tst
 7 Bsy
 8 RTS
 9 OffL
10 LoadPM
11 Disp_
12 Next
13
14 QueryPM
15
16
17
18
```

4 Busy the RMM by typing

>BSY

NT3X04
in an RSC RMM (continued)

and pressing the Enter key.

Example of a MAP display:

```
   CM    MS    IOD    Net    PM    CCS    LNS    Trks    Ext    APPL
   .      .      .     .  4SysB     .       .     .      .     .
                                          *C*
RMM                    SysB     ManB     OffL     CBsy     ISTb    InSv
 0 Quit         PM        4       0        10        3        3     130
 2 Post_       RMM        0       1         1        0        0       2
 3
 4                 RMM  5  ManB
 5 Trnsl
 6 Tst
 7 Bsy
 8 RTS
 9 OffL
10 LoadPM
11 Disp_
12 Next
13
14 QueryPM
15
16
17
18
```

At the RMM shelf

5

> **CAUTION**
> **Static discharge may cause damage to circuit packs**
> Put on a wrist strap and connect it to the frame of the RMM before removing or inserting any cards. This protects the RMM against service degradation caused by static electricity.

Put on a wrist strap.

6 Remove the NT3X04 card as shown in the following figures.

a Locate the card to be removed on the appropriate shelf.

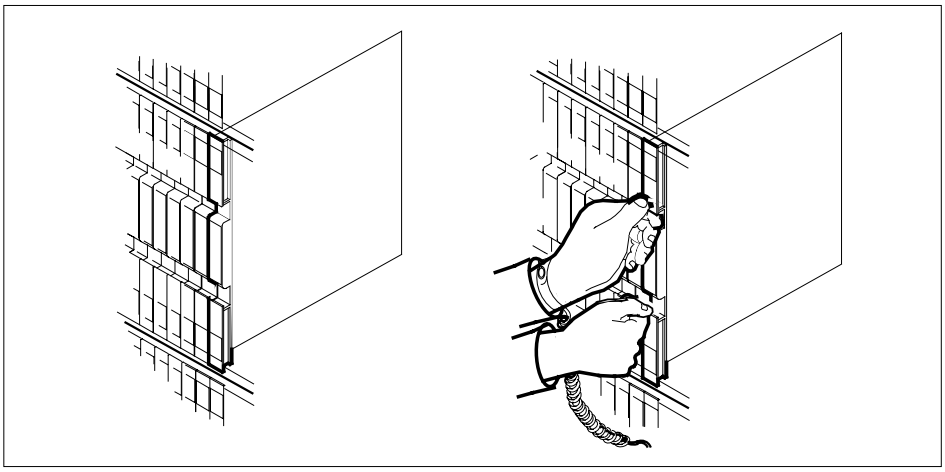

b Open the locking levers on the card to be replaced and gently pull the card towards you until it clears the shelf.

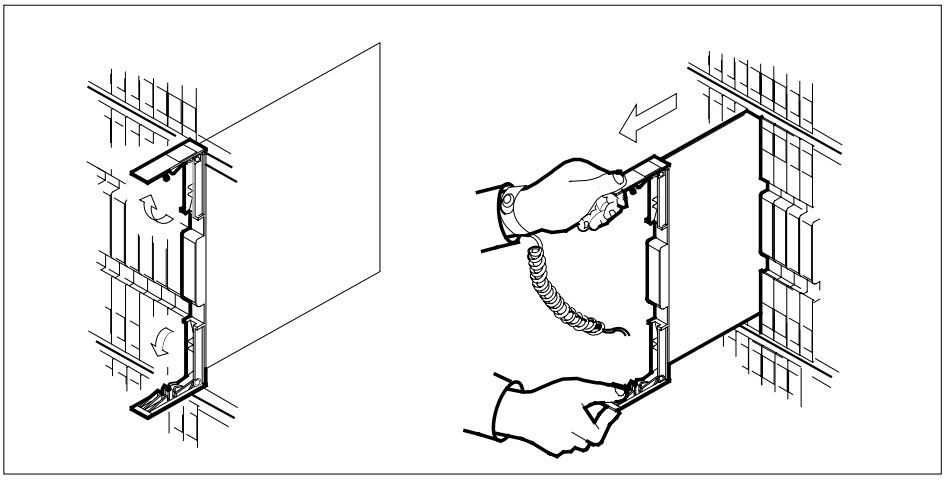

c Ensure the replacement card has the same PEC including suffix, as the card you just removed.

7

DANGER
Equipment damage
Take these precautions when removing or inserting a card:

1. Do not apply direct pressure to the components.

2. Do not force the cards into the slots.

NT3X04
in an RSC RMM (continued)

Open the locking levers on the replacement card.

Align the card with the slots in the shelf and gently slide the card into the shelf.

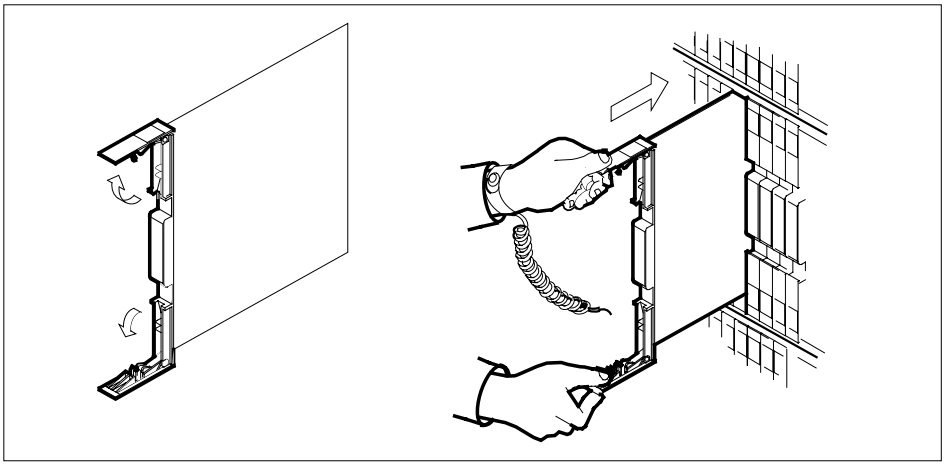

8 Seat and lock the card.

a Using your fingers or thumbs, push on the upper and lower edges of the faceplate to ensure the card is fully seated in the shelf.

b Close the locking levers.

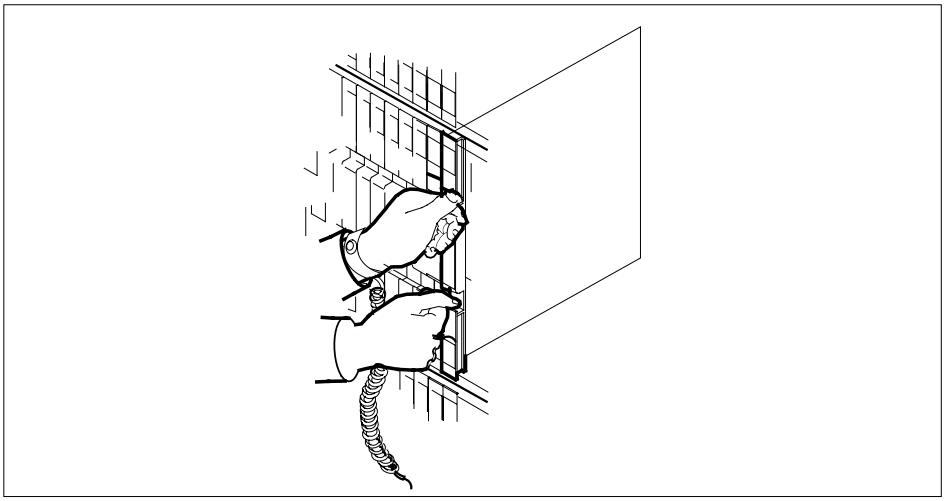

9 Use the following information to determine the next step in this procedure.

If you entered this procedure from	Do
an alarm clearing procedure	step 13

If you entered this procedure from	Do
other	step 10

At the MAP display

10 Return the RMM to service by typing

>RTS

and pressing the Enter key.

If the RTS	Do
passed	step 11
failed	step 14

11 Send any faulty cards for repair according to local procedure.

12 Record the following items in office records:

- date the card was replaced
- serial number of the card
- symptoms that prompted replacement of the card

Go to step 15.

13 Return to the *Alarm Clearing Procedure* that directed you to this card replacement procedure. If necessary, go to the point where the faulty card list was produced, identify the next faulty card on the list, and go to the appropriate replacement procedure in this manual for that card.

14 Obtain further assistance in replacing this card by contacting personnel responsible for higher level of support.

15 You have successfully completed this procedure. Return to the maintenance procedure that directed you to this card replacement procedure and continue as directed.

NT3X09 in an IOPAC RMM

Application

Use this procedure to replace the following card in an RMM.

PEC	Suffixes	Name
NT3X09	AA, BA	Remote Metallic Access (MTA) card

Common procedures

The common replacing a card procedure is referenced in this procedure.

Action

The following flowchart is a summary of the procedure. To replace the card, use the instructions in the procedure that follows the flowchart.

NT3X09 in an IOPAC RMM (continued)

Summary of replacing an NT3X09 card in an RMM

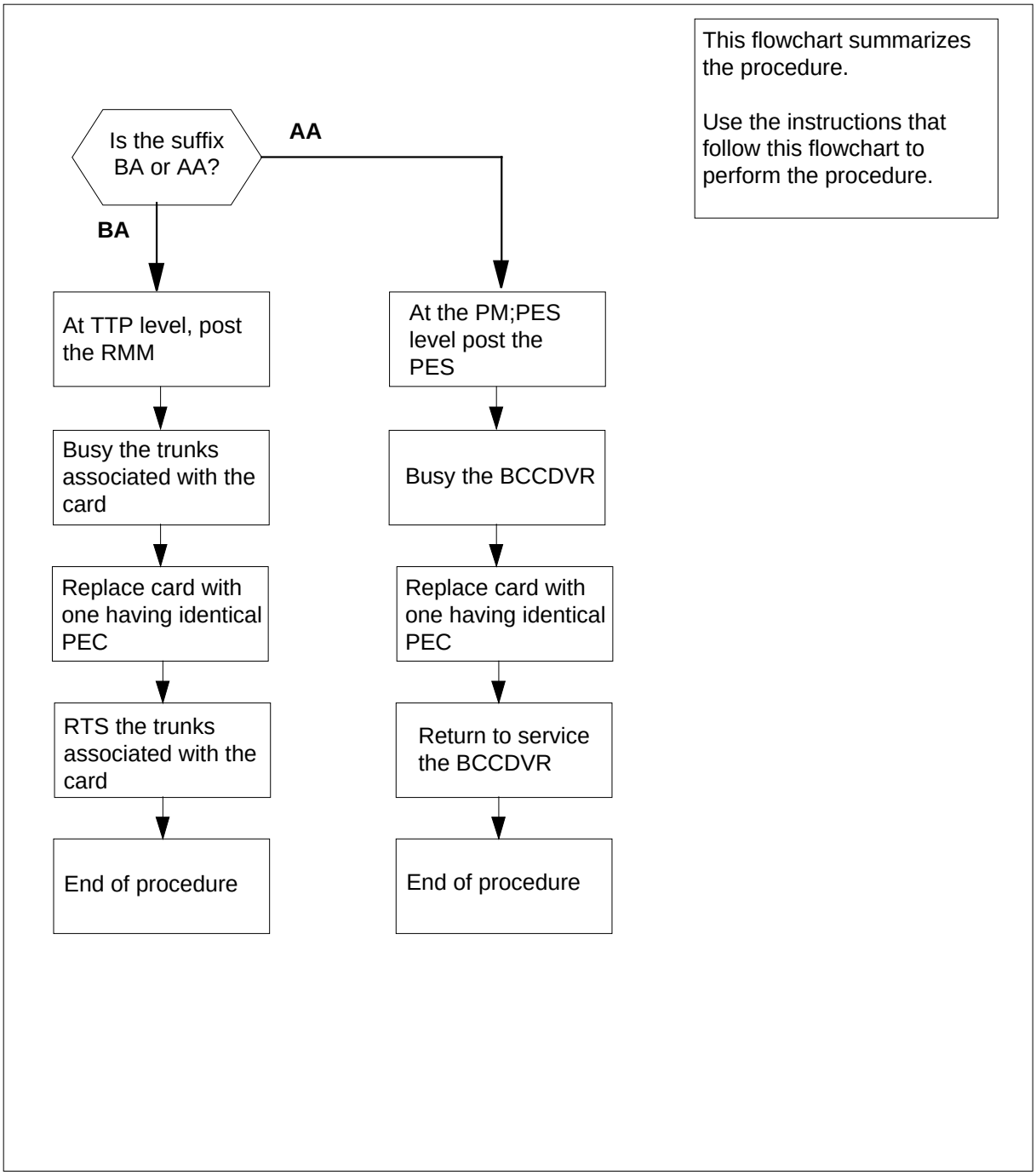

NT3X09 in an IOPAC RMM (continued)

Replacing an NT3X09 card in an RMM

At your current location

1 Obtain a replacement card. Ensure that the replacement card has the same product equipment code (PEC), including suffix, as the card to be removed.

At the MAP terminal

2 Determine whether the NT3X09 card to be replaced has suffix of AA or BA.

If	Do
AA	step 9
BA	step 3

3 Access the TTP level of the MAP terminal and post the RMM that contains the card to be replaced by typing

`>MAPCI;MTC;TRKS;TTP;POST P RMM rmm_no ckt_no`

and pressing the Enter key.

where

rmm_no
is the number of the RMM shelf in which the card is to be replaced

ckt_no
is the number of the first circuit where the NT3X09 card is physically located

Example of a MAP response:

```
LAST CIRCUIT = 27
POST CKT IDLED
SHORT CLLI IS:  1118
OK, CLLI POSTED

POST  20   DELQ       BUSY Q          DIG
TTP 6-006
CKT TYPE   PM NO.     COM LANG        STA S R DOT TE R
OG  MISC RMM 0 0    MTADRIVER 20      LO
```

4 Check the status of the RMM.

If RMM status is	Do
MB, PMB, RMB	step 6
other	step 5

NT3X09 in an IOPAC RMM (continued)

5 Busy the trunks that are associated with the card to be replaced by typing

```
>BSY ; NEXT
```

and pressing the Enter key.

Note: Repeat this step for all circuits associated with the faulty NT3X09BA card to be replaced.

At the IOPAC site

6

WARNING
Static electricity damage
Wear a wrist strap connected to the wrist strap grounding point of a frame supervisory panel (FSP) while handling circuit cards. This protects the cards against damage caused by static electricity.

Replace the NT3X09BA card using the common replacing a card procedure in this document. When you have completed the procedure, return to this point.

At the MAP terminal

7 Post the new NT3X09BA card by typing

```
>POST P RMM rmm_no ckt_no
```

and pressing the Enter key.

where

rmm_no
is the number of the RMM shelf in which the card is to be replaced

ckt_no
is the number of the first circuit where the NT3X09BA card is physically located

8 Return to service the circuits busied in step 5 by typing

```
>RTS ;NEXT
```

and pressing the Enter key.

Note: Repeat this step for all circuits associated with the new NT3X09BA card.

If RTS	Do
passed	step 15
failed	step 17

NT3X09 in an IOPAC RMM (continued)

9 Access the PES level of the MAP terminal and post the PES that contains the faulty NT3X09AA card to be replaced by typing

>MAPCI;MTC;PM;PES; POST pes_no

and pressing the Enter key.

where

pes_no
is the number of the IOPAC containing the faulty NT3X09AA card

10 Disable the audit by typing

>AUDIT DISABLE

and pressing the Enter key.

11 Busy the battery charge controller (BCCDVR) by typing

>BSY BCCDVR

and pressing the Enter key.

Example of a MAP terminal display:

```
 CM     MS      IOD     NET     PM     CCS    LNS     Trks    Ext   Appl
 .      .       .        .    1PES     .      .       .       .     .
 PES                   SysB   ManB    OffL    CBSY    ISTB    InSV
 0 Quit      PM          0      3       4       0       4      30
 2 Post_
 3                      RED      AMBER     GREEN     OFFL
 4           PES         1          0         3        1
 5
 6 Tst_      PES       2 Cond:  RED    REM2     2   1   RMM   2
 7 Bsy_                                          Audit  Week  HBT
 8 Rts_       Common     Rectifiers               DIS    –     .
 9 OffL_       AC     FL0 FL1 CL0 CL1   BCCDVR  PESALRM  ECU FSP
10              .      .   .   .   .      M        .       .   .
11 Disp_       BCC    0    1    2    3          Temp      Door    BCCFUSES
12 Next          0= W   BSY  BSY  BSY  BSY   EHT ELT  FRNT SIDE   0   1
13               1= W   BSY  BSY  BSY  BSY    .   .    .    .     .   .
14 QueryPES_
15 OpenCkt_
16 Charge_
17 LoadB_
18 MEASure_
```

At the IOPAC site

12 Replace the NT3X09AA card using the common replacing a card procedure in this document. When you have completed the procedure, return to this point.

At the MAP terminal

13 Return to service the battery charge controller (BCCDVR) by typing

>RTS BCCDVR

and pressing the Enter key.

Example of a MAP display:

```
CM     MS     IOD    NET     PM    CCS    LNS    Trks    Ext   Appl
.      .       .      .      .     .      .       .       .      .
PES                  SysB   ManB    OffL    CBSY    ISTB    InSV
0 Quit      PM         0      3       4       0       4      30
2 Post_
3                     RED      AMBER     GREEN     OFFL
4           PES         0          1         3         1
5
6 Tst_      PES      2 Cond:  RED    REM2     2   1   RMM   2
7 Bsy_                                          Audit  Week  HBT
8 Rts_       Common     Rectifiers                DIS    –     .
9 OffL_       AC     FL0 FL1 CL0 CL1   BCCDVR  PESALRM  ECU FSP
10              .      .   .   .   .      .        .        .   .
11 Disp_     BCC    0     1    2    3     Temp     Door    BCCFUSES
12 Next     0= W     .    .    .    .   EHT ELT  FRNT SIDE    0   1
13          1= W     .    .    .    .   .    .    .       .    .   .
14 QueryPES_
15 OpenCkt_
16 Charge_
17 LoadB_
18 MEASure_
```

14 Enable the audit by typing

>AUDIT ENABLE

and pressing the Enter key.

15 Send any faulty cards for repair according to local procedure.

16 Record the following items in office records:

- date the card was replaced
- serial number of the card
- symptoms that prompted replacement of the card

Go to step 18.

17 Obtain further assistance in replacing this card by contacting the personnel responsible for higher level of support.

18 You have completed this procedure.

NT3X09 in an OPAC RMM

Application

Use this procedure to replace the following card in an RMM..

PEC	Suffix	Name
NT3X09	AA	Remote metallic test access card (4x8)
NT3X09	BA	8x8 metallic test access card

Common procedures

The common replacing a card procedure is referenced in this procedure.

Action

The following flowchart is only a summary of the procedure. To replace the card, use the instructions in the step-action procedure that follows the flowchart.

NT3X09
in an OPAC RMM (continued)

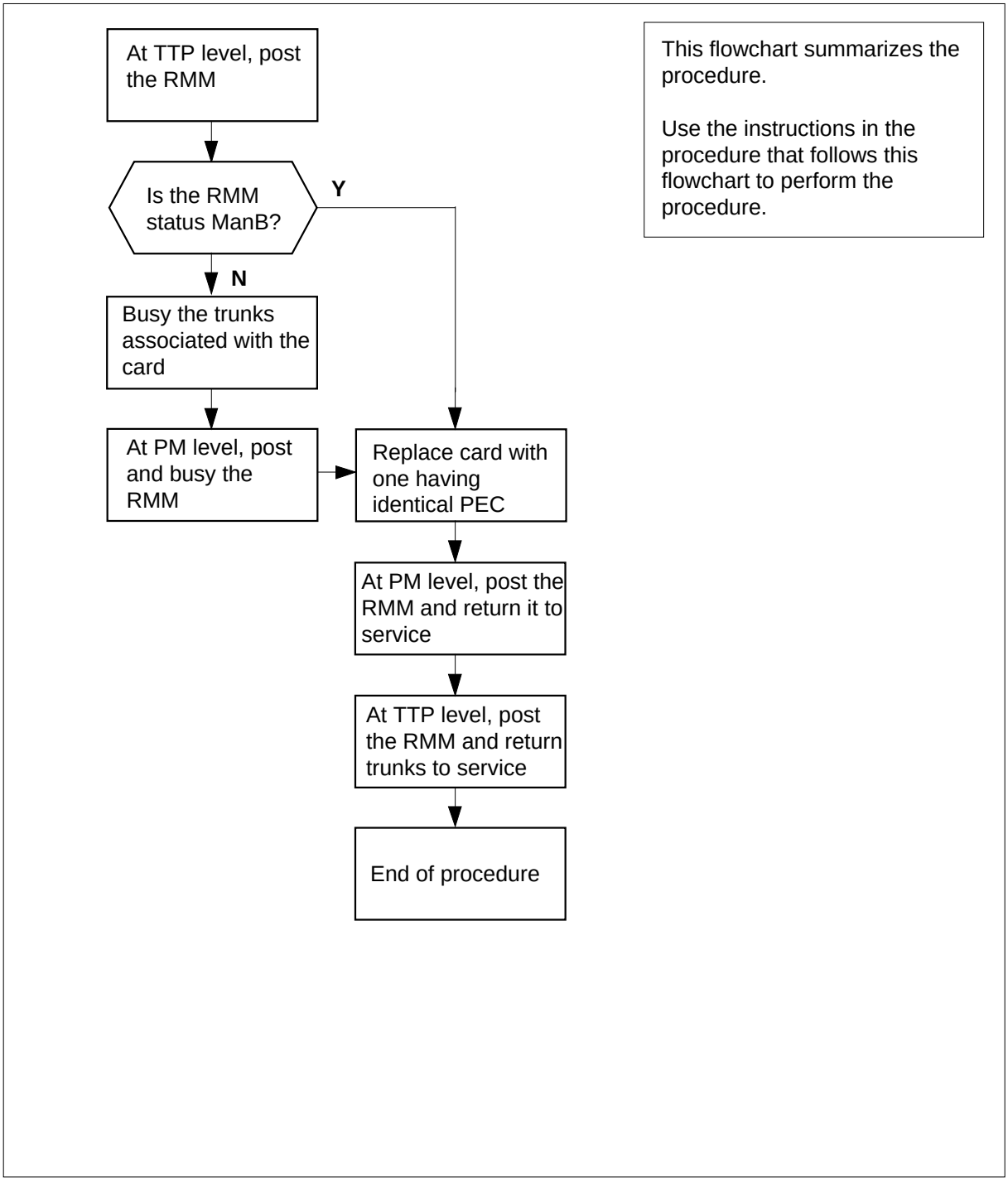

NT3X09 in an OPAC RMM (continued)

Replacing an NT3X09 in an RMM

At the MAP

1 Obtain a replacement card. Ensure the replacement card has the same product equipment code (PEC), including suffix, as the card to be removed.

At your MAP terminal

2 Access the trunk test position (TTP) level of the MAP display and post the RMM that contains the card to be replaced by typing

`>MAPCI;MTC;TRKS;TTP;POST P RMM rmm_no`

and pressing the Enter key.

where

rmm_no
is the number of the RMM shelf where the card is to be replaced

Example of a MAP response:

```
POST  20   DELQ       BUSY Q          DIG
TTP 6-006
CKT TYPE   PM NO.     COM LANG        STA S R DOT TE R
OG    MF RMM 0 0  OTWAON23DA00 2001   LO
                                      P_IDL

LAST CIRCUIT = 27
POST CKT IDLED
SHORT CLLI IS:  OTDA00
OK, CLLI POSTED
```

3 Check the status of the RMM.

If RMM status is	Do
ManB, PMB, RMB	step 7
other	step 4

4 Busy the trunks associated with the card to be replaced by typing

`>BSY ALL`

and pressing the Enter key.

5 Go to the peripheral module (PM) level of the MAP display and post the RMM by typing

`>PM;POST RMM rmm_no`

and pressing the Enter key.

where

rmm_no
is the number of the RMM shelf where the card is to be replaced

Example of a MAP response:

```
          SysB      ManB      Offl      CBsy      ISTb     InSv
PM           0         2         2         0         7       21
RMM          0         0         0         0         0        6

RMM      0     InSv
```

At the RMM

6

WARNING
Static electricity damage
Wear a wrist strap connected to the wrist strap grounding point at the top of each equipment rack, (Bay 0, 1, 2, and 3), while handling circuit cards. This protects the cards against damage caused by static electricity.

Busy the RMM by typing

>BSY

and pressing the Enter key.

7 Replace the NT3X09 card using the common replacing a card procedure in this document. When you have completed the procedure, return here.

At the MAP terminal

8 Go to the PM level and post the RMM, if not already posted, and return the RMM to service by typing

>PM;POST RMM rmm_no;RTS

and pressing the Enter key.

where

rmm_no
is the number of the RMM shelf where the card is to be replaced

If RTS	Do
passed	step 9
failed	step 13

NT3X09 in an OPAC RMM (end)

9 Go to the TTP level of the MAP display and post the RMM by typing

`>TRKS;TTP;POST P RMM rmm_no`

and pressing the Enter key.

where

rmm_no
is the number of the RMM shelf where the card is to be replaced

10 Return to service the circuits busied in step 4 by typing

`>RTS ALL`

and pressing the Enter key.

If RTS	Do
passed	step 11
failed	step 13

11 Send any faulty cards for repair according to local procedure.

12 Record the following items in office records:

- date the card was replaced
- serial number of the card
- symptoms that prompted replacement of the card

Go to step 14.

13 Obtain further assistance in replacing this card by contacting the personnel responsible for higher level of support.

14 You have completed this procedure.

NT3X09 in an OPM RMM

Application

Use this procedure to replace the following card in an RMM.

PEC	Suffixes	Name
NT3X09	AA, BA	Remote Metallic Access (MTA) card

Common procedures

The common replacing a card procedure is referenced in this procedure.

Action

The following flowchart is a summary of the procedure. To replace the card, use the instructions in the procedure that follows the flowchart.

NT3X09
in an OPM RMM (continued)

Summary of replacing an NT3X09 card in an RMM

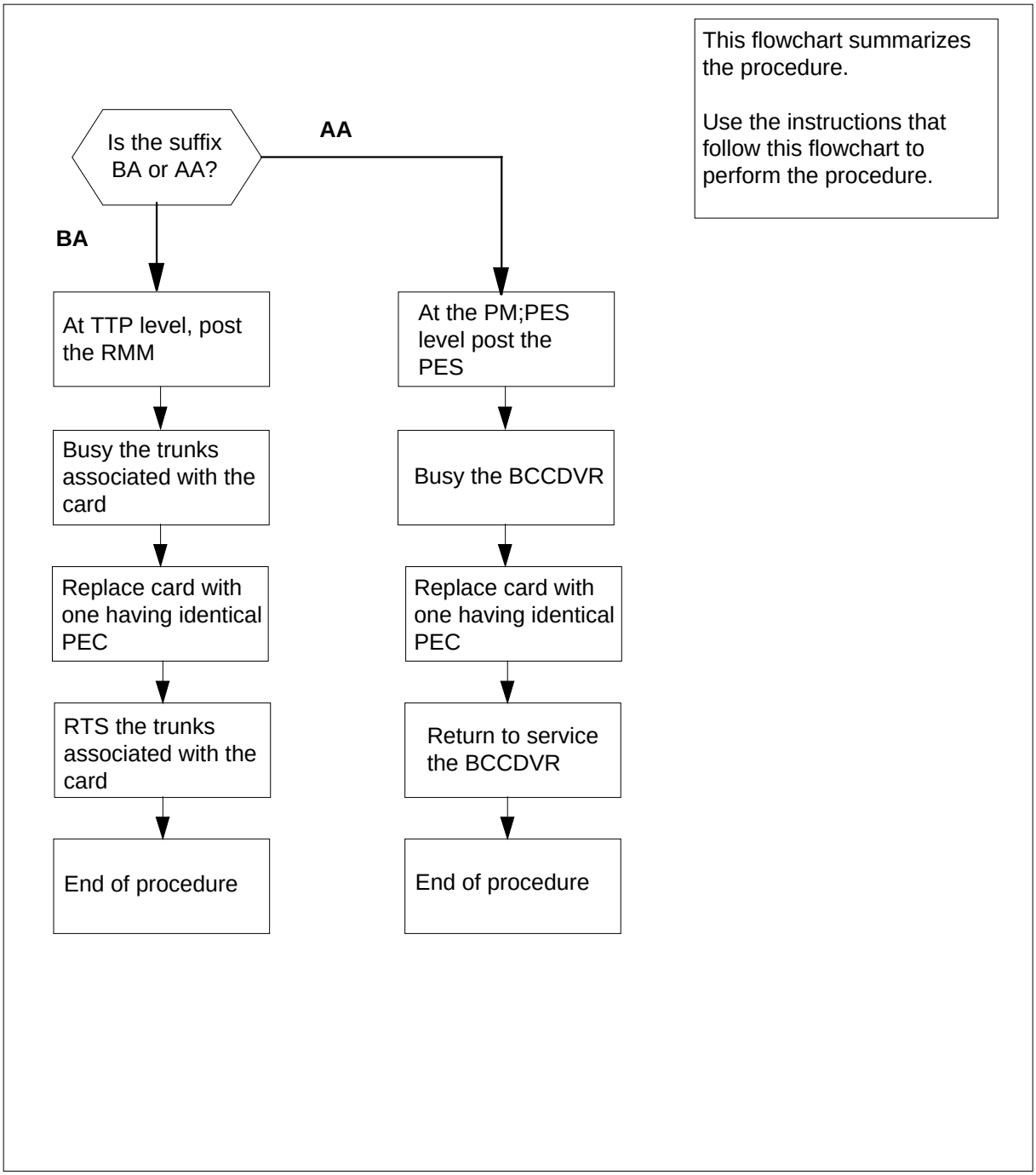

NT3X09 in an OPM RMM (continued)

Replacing an NT3X09 card in an RMM

At your current location

1 Obtain a replacement card. Ensure that the replacement card has the same product equipment code (PEC), including suffix, as the card to be removed.

At the MAP terminal

2 Determine the suffix of the NT3X09 card to be replaced.

If suffix is	Do
BA	step 3
AA	step 9

3 Access the TTP level of the MAP terminal and post the RMM that contains the card to be replaced by typing

`>MAPCI;MTC;TRKS;TTP;POST P RMM rmm_no ckt_no`

and pressing the Enter key.

where

rmm_no
is the number of the RMM shelf in which the card is to be replaced

ckt_no
is the number of the first circuit where the NT3X09 card is physically located

Example of a MAP response:

```
LAST CIRCUIT = 27
POST CKT IDLED
SHORT CLLI IS:  1118
OK, CLLI POSTED

POST  20   DELQ       BUSY Q          DIG
TTP 6-006
CKT TYPE   PM NO.     COM LANG        STA S R DOT TE R
OG  MISC RMM 0 0    MTADRIVER 20      LO
```

4 Check the status of the RMM.

If RMM status is	Do
MB, PMB, RMB	step 6
other	step 5

NT3X09
in an OPM RMM (continued)

5 Busy the trunks that are associated with the card to be replaced by typing

```
>BSY ; NEXT
```

and pressing the Enter key.

Note: Repeat this step for all circuits associated with the faulty NT3X09AA/BA card to be replaced.

At the shelf

6

WARNING
Static electricity damage
Wear a wrist strap connected to the wrist strap grounding point of a frame supervisory panel (FSP) while handling circuit cards. This protects the cards against damage caused by static electricity.

Replace the NT3X09 card using the common replacing a card procedure in this document. When you have completed the procedure, return to this point.

At the MAP terminal

7 Post the new NT3X09 card by typing

```
>POST P RMM rmm_no ckt_no
```

and pressing the Enter key.

where

rmm_no
is the number of the RMM shelf in which the card is to be replaced

ckt_no
is the number of the first circuit where the NT3X09 card is physically located

8 Return to service the circuits busied in step 5 by typing

```
>RTS ;NEXT
```

and pressing the Enter key.

Note: Repeat this step for all circuits associated with the new NT3X09 card.

If RTS	Do
passed	step 15
failed	step 17

NT3X09
in an OPM RMM (continued)

9 Access the PES level of the MAP terminal and post the PES that contains the faulty NT3X09 card to be replaced by typing

>MAPCI;MTC;PM;PES; POST pes_no

and pressing the Enter key.

where

pes_no
is the number of the OPM containing the faulty NT3X09 card

10 Disable the audit by typing

>AUDIT DISABLE

and pressing the Enter key.

11 Busy the battery charge controller (BCCDVR) by typing

>BSY BCCDVR

and pressing the Enter key.

Example of a MAP terminal display:

```
CM     MS      IOD     NET     PM     CCS     LNS     Trks    Ext
.      .       .       .     1PES     .       .       .       .
OPMPES               SysB   ManB    OffL    CBSY    ISTB    InSV
0 Quit      PM         0      3       4       0       4      30
2 Post_
3                     RED      AMBER     GREEN     OFFL
4           OPMPES     1         0         3        1
5
6 Tst_      OPMPES    2 Cond:  RED    REM2     2   1   RMM   2
7 Bsy_                                          Audit  Week  HBT
8 Rts_       Common     Rectifiers               DIS    –     .
9 OffL_       AC     FL0 FL1 CL0 CL1   BCCDVR  PESALRM  ECU FSP
10             .      .   .   .   .      M       .       .   .
11 Disp_      BCC    0    1    2    3     Temp     Door    BCCFUSES
12 Next         0= W   BSY  BSY  BSY  BSY   EHT ELT  FRNT SIDE    0   1
13              1= W   BSY  BSY  BSY  BSY    .   .    .    .      .   .
14 QueryPES_
15 OpenCkt_
16 Charge_
17 LoadB_
18 MEASure_
```

12 Replace the NT3X09 card using the common replacing a card procedure in this document. When you have completed the procedure, return to this point.

13 Return to service the battery charge controller (BCCDVR) by typing

>RTS BCCDVR

and pressing the Enter key.

Example of a MAP display:

NT3X09
in an OPM RMM (end)

```
CM     MS      IOD     NET     PM     CCS     LNS     Trks    Ext
.      .       .       .       .      .       .       .       .
OPMPES                SysB   ManB    OffL    CBSY    ISTB    InSV
0 Quit      PM          0      3       4       0       4      30
2 Post_
3                      RED      AMBER     GREEN     OFFL
4           OPMPES      0          1         3         1
5
6 Tst_      OPMPES    2 Cond:  RED    REM2     2   1   RMM   2
7 Bsy_                                          Audit  Week  HBT
8 Rts_       Common     Rectifiers                DIS    –     .
9 OffL_       AC     FL0 FL1 CL0 CL1   BCCDVR  PESALRM  ECU FSP
10              .      .   .   .   .      .       .        .   .
11 Disp_     BCC    0     1    2    3        Temp      Door    BCCFUSES
12 Next     0= W    .     .    .    .    EHT ELT  FRNT SIDE    0   1
13          1= W    .     .    .    .    .    .    .      .    .   .
14 QueryPES_
15 OpenCkt_
16 Charge_
17 LoadB_
18 MEASure_
```

14 Enable the audit by typing

`>AUDIT ENABLE`

and pressing the Enter key.

15 Send any faulty cards for repair according to local procedure.

16 Record the following items in office records:

- date the card was replaced
- serial number of the card
- symptoms that prompted replacement of the card

Go to step 18.

17 Obtain further assistance in replacing this card by contacting the personnel responsible for higher level of support.

18 You have completed this procedure.

NT3X09 in an RLCM-EDC RMM

Application

Use this procedure to replace a card in the shelves or frames identified in the following table.

PEC	Suffixes	Cardname	Shelf/frame name
NT3X09	AA, BA	Metallic Test Access (MTA)	RMM/RLCC

If you cannot identify the PEC, suffix, and shelf or frame for the card you want to replace, refer to the Index. The maintenance manual index contains a list of cards, shelves, and frames.

Common procedures

The common replacing a card procedure is referred to in this procedure.

Action

This procedure contains a summary flowchart and a list of steps. Use the flowchart to review the procedure. Follow the steps to perform the procedure.

NT3X09
in an RLCM-EDC RMM (continued)

Summary of replacing an NT3X09 card in RMM

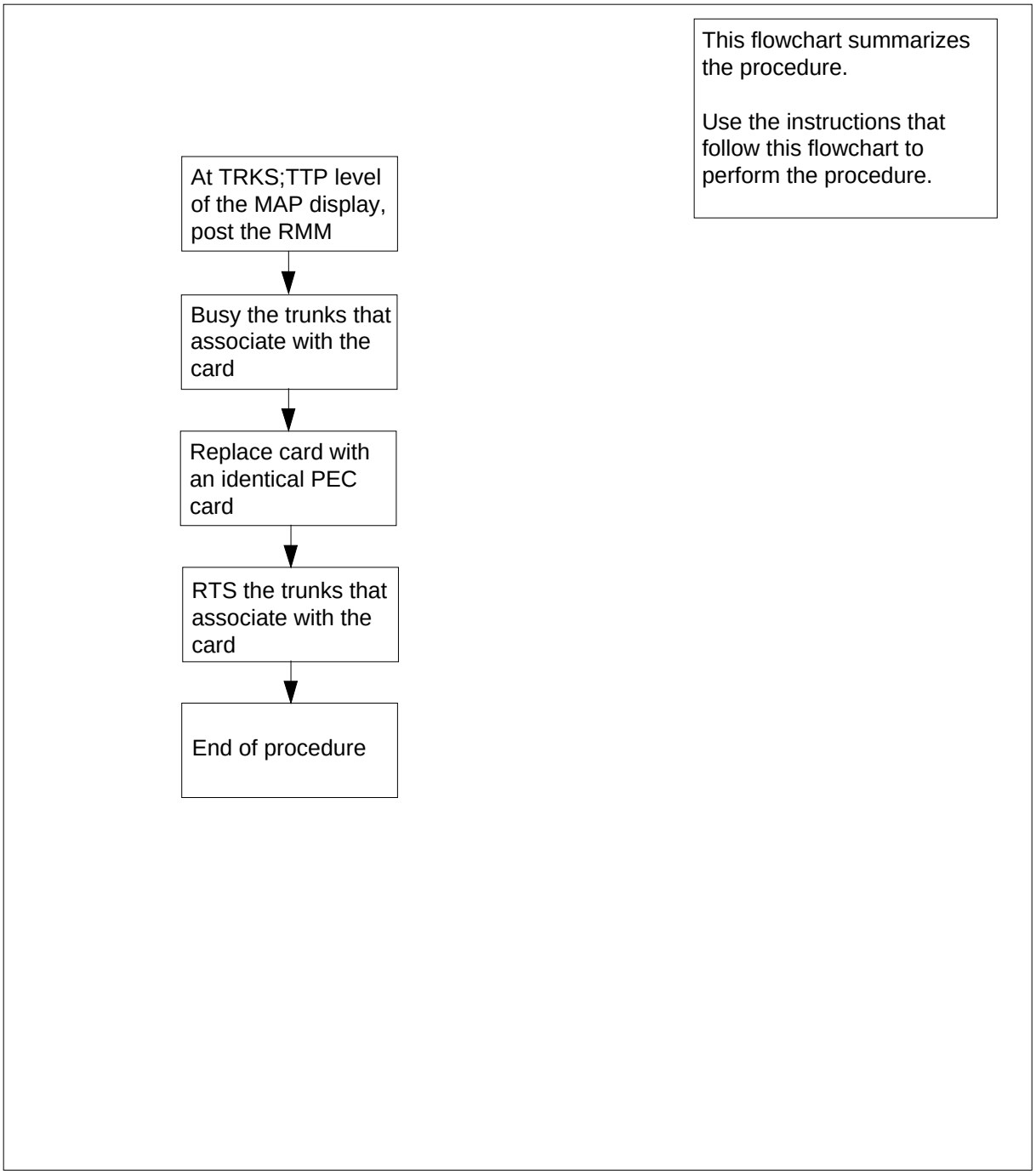

NT3X09 in an RLCM-EDC RMM (continued)

Replacing an NT3X09 card in an RMM

At your current location

1 Obtain a replacement card. Make sure that the replacement card has the same product equipment code (PEC), and PEC suffix, as the removed card.

At the MAP terminal

2 To access the TTP level of the MAP terminal and post the RMM, type

>MAPCI;MTC;TRKS;TTP;POST P RMM rmm_no ckt_no

and press the Enter key.

where

rmm_no
is the number of the RMM shelf, the location of the card to remove

ckt_no
is the number of the first circuit and the location of the NT3X09 card

Example of a MAP response:

```
LAST CIRCUIT = 27
POST CKT IDLED
SHORT CLLI IS:  1118
OK, CLLI POSTED

POST  20   DELQ       BUSY Q          DIG
TTP 6–006
CKT TYPE   PM NO.     COM LANG        STA S R DOT TE R
OG  MISC RMM 0 0    MTADRIVER 20      LO
```

3 To verify the location of the correct card slot, type

>CKTLOC

and press the Enter key.

4 Check the status of the RMM.

If RMM status is	Do
MB, PMB, RMB	step 6
other than listed here	step 5

5 To busy the trunks that associate with the card, type

>BSY ;NEXT

NT3X09 in an RLCM-EDC RMM (continued)

and press the Enter key.

Note: Repeat this step for all circuits that associate with the defective NT3X09 card you must replace.

At the RLCC cabinet

6

WARNING
Static electricity damage
Wear a wrist strap that connects to the wrist-strap grounding point of a frame supervisory panel (FSP) to handle circuit cards. The wrist strap protects the cards against static electricity damage.

To replace the NT3X09 card, use the common replacing a card procedure in this document. When the procedure is complete, return to this point.

At the MAP terminal

7 To post the new NT3X09 card, type

```
>POST P RMM rmm_no ckt_no
```

and press the Enter key.

where

rmm_no
is the number of the RMM shelf, the location of the card to remove

ckt_no
is the number of the first circuit and the location of the NT3X09 card

8 To return to service the circuits used in step 5, type

```
>RTS ;NEXT
```

and press the Enter key.

Note: Repeat this step for all circuits that associate with the new NT3X09 card.

If RTS	Do
passes	step 9
fails	step 11

9 To send defective cards for repair, follow the local procedures.

NT3X09
in an RLCM-EDC RMM (end)

10 Record information for office records, as follows:

- date of card replacement
- serial number of the card
- details and reasons for replacement of the card

Go to step 12.

11 For additional help, contact the next level of maintenance.

12 The procedure is complete.

NT3X09 in an RLCM RMM

Application

Use this procedure to replace the following card in an RMM.

PEC	Suffixes	Name
NT3X09	AA, BA	Remote Metallic Access (MTA) card

Common procedures

The common replacing a card procedure is referenced in this procedure.

Action

The following flowchart is a summary of the procedure. To replace the card, use the instructions in the procedure that follows the flowchart.

NT3X09
in an RLCM RMM (continued)

Summary of replacing an NT3X09 card in an RMM

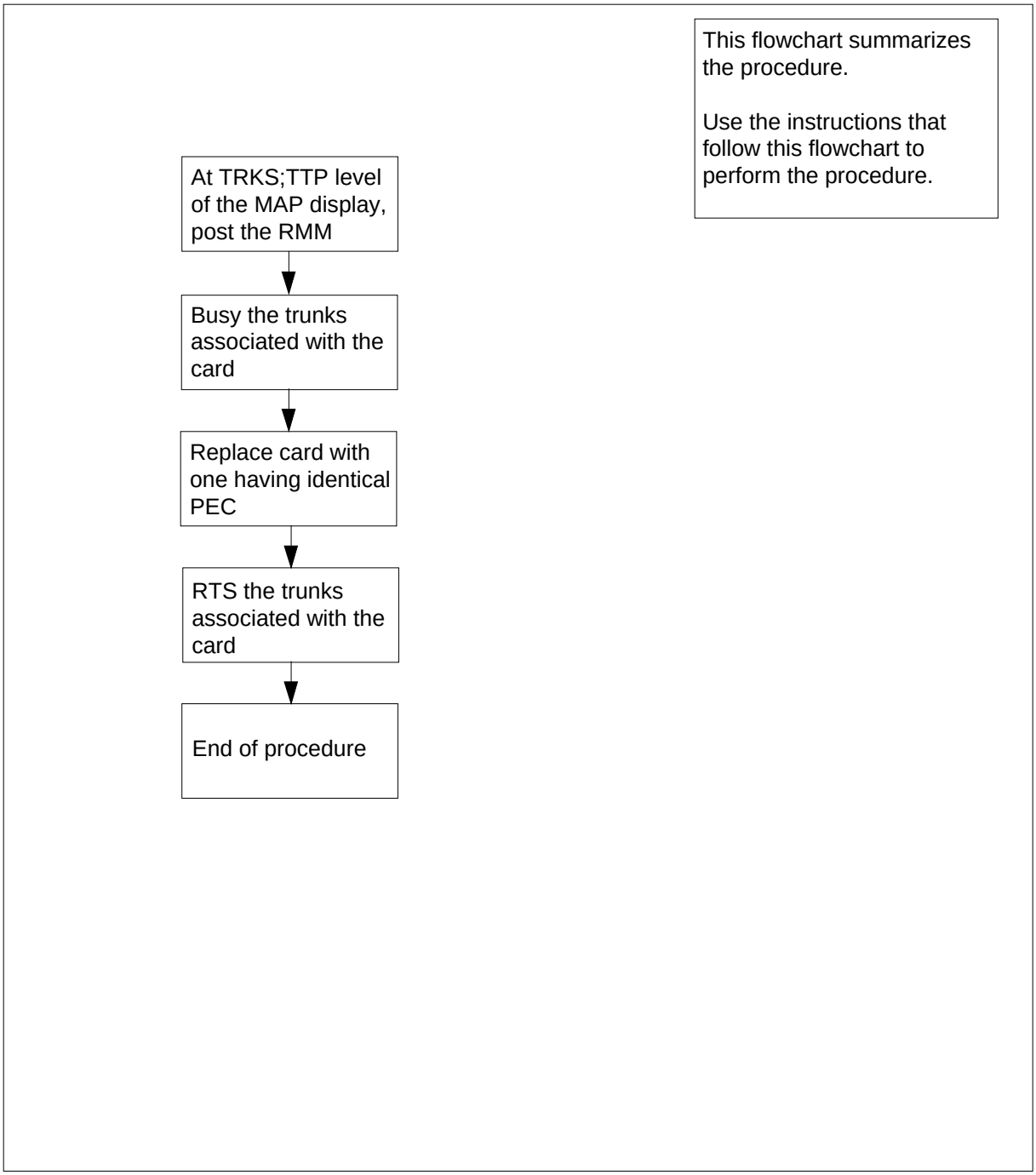

NT3X09 in an RLCM RMM (continued)

Replacing an NT3X09 card in an RMM

At your current location

1 Obtain a replacement card. Ensure that the replacement card has the same product equipment code (PEC), including suffix, as the card to be removed.

At the MAP terminal

2 Access the TTP level of the MAP terminal and post the RMM that contains the card to be replaced by typing

`>MAPCI;MTC;TRKS;TTP;POST P RMM rmm_no ckt_no`

and pressing the Enter key.

where

rmm_no
is the number of the RMM shelf in which the card is to be replaced

ckt_no
is the number of the first circuit where the NT3X09 card is physically located

Example of a MAP response:

```
LAST CIRCUIT = 27
POST CKT IDLED
SHORT CLLI IS:  1118
OK, CLLI POSTED

POST  20   DELQ       BUSY Q          DIG
TTP 6-006
CKT TYPE   PM NO.     COM LANG        STA S R DOT TE R
OG  MISC RMM 0 0    MTADRIVER 20      LO
```

3 Check the status of the RMM.

If RMM status is	Do
MB, PMB, RMB	step 5
other	step 4

4 Busy the trunks that are associated with the card to be replaced by typing

`>BSY ; NEXT`

and pressing the Enter key.

Note: Repeat this step for all circuits associated with the faulty NT3X09 card to be replaced.

NT3X09
in an RLCM RMM (continued)

At the RLCE frame

5

WARNING
Static electricity damage
Wear a wrist strap connected to the wrist strap grounding point of a frame supervisory panel (FSP) while handling circuit cards. This protects the cards against damage caused by static electricity.

Replace the NT3X09 card using the common replacing a card procedure in this document. When you have completed the procedure, return to this point.

At the MAP terminal

6 Post the new NT3X09 card by typing

`>POST P RMM rmm_no ckt_no`

and pressing the Enter key.

where

rmm_no
is the number of the RMM shelf in which the card is to be replaced

ckt_no
is the number of the first circuit where the NT3X09 card is physically located.

7 Return to service the circuits busied in step 4 by typing

`>RTS ;NEXT`

and pressing the Enter key.

Note: Repeat this step for all circuits associated with the new NT3X09 card.

If RTS	Do
passed	step 8
failed	step 10

8 Send any faulty cards for repair according to local procedure.

9 Record the following items in office records:

- date the card was replaced
- serial number of the card
- symptoms that prompted replacement of the card

Go to step 11.

NT3X09 in an RLCM RMM (end)

10 Obtain further assistance in replacing this card by contacting the personnel responsible for higher level of support.

11 You have completed this procedure.

NT3X09 in an RSC RMM

Application

Use this procedure to replace the following card in an RSC RMM.

PEC	Suffixes	Name
NT3X09	AA, BA	Remote metallic access (MTA) card

Common Procedures

None

Action

The following flowchart is a summary of the procedure. To replace the card, use the instructions in the procedure that follows the flowchart.

NT3X09
in an RSC RMM (continued)

Summary of card replacement procedure for an NT3X09 card in an RSC RMM

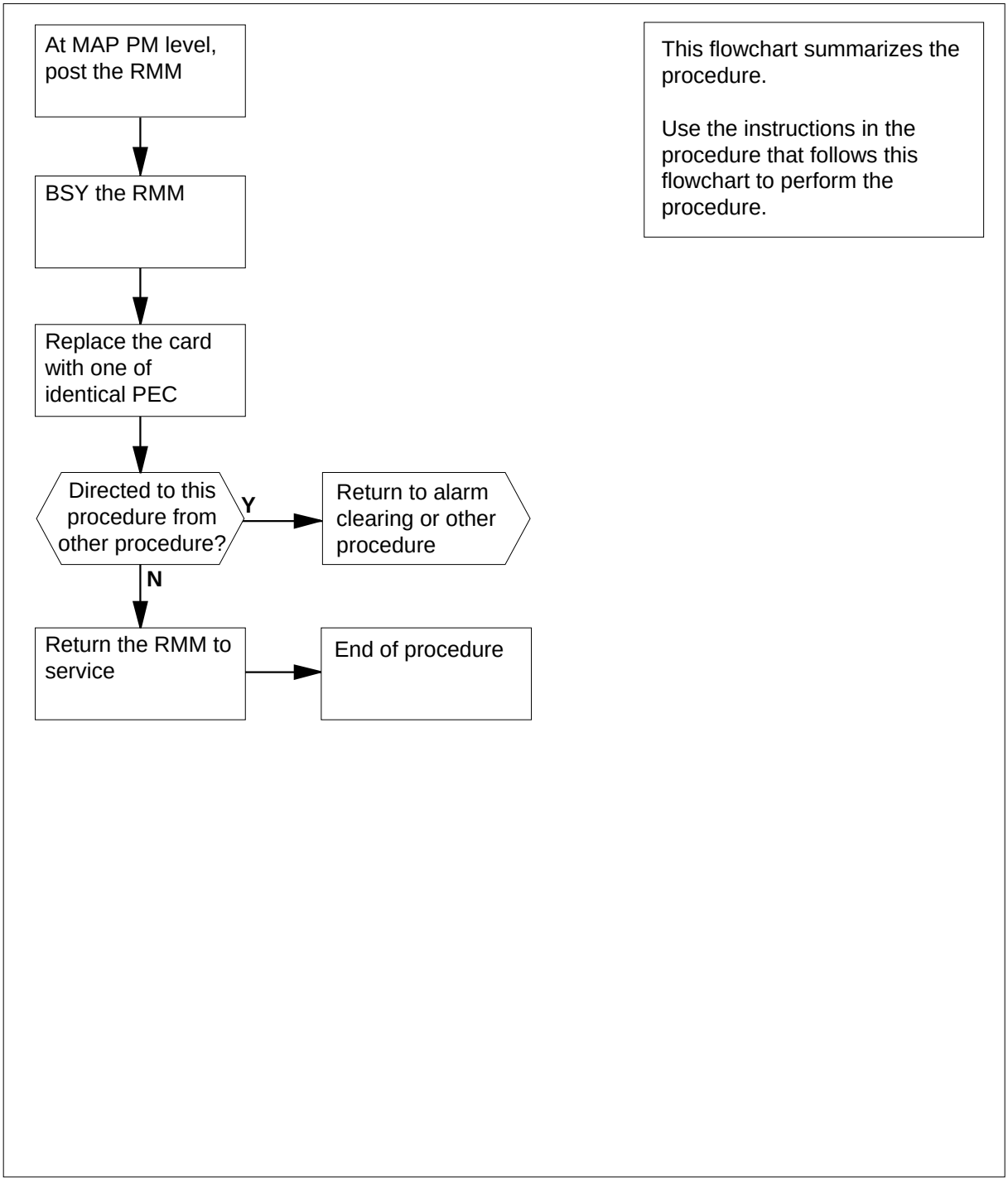

Replacing an NT3X09 card in RSC RMM

At your current location

1 Proceed only if you were either directed to this card replacement procedure from a step in a maintenance procedure, are using the procedure to verify or accept cards, were directed to this procedure by your maintenance support group.

2 Obtain a replacement card. Ensure the replacement card has the same product equipment code (PEC) including suffix, as the card to be removed.

At the MAP display

3 Access the PM level and post the RMM by typing

>MAPCI;MTC;PM;POST RMM rmm_no

and pressing the Enter key.

where

rmm_no
is the number of the RMM where the card is to be removed

Example of a MAP display:

```
   CM    MS    IOD    Net    PM    CCS    LNS    Trks    Ext    APPL
   .     .      .      .    4SysB   .      .       .      .      .

RMM               SysB     ManB     OffL     CBsy     ISTb      InSv
 0 Quit    PM        4        0       10        3        3       130
 2 Post_   RMM       0        1        1        0        0         2
 3
 4         RMM  5  INSV
 5 Trnsl
 6 Tst
 7 Bsy
 8 RTS
 9 OffL
10 LoadPM
11 Disp_
12 Next
13
14 QueryPM
15
16
17
18
```

4 Busy the RMM by typing

>BSY

and pressing the Enter key.

NT3X09 in an RSC RMM (continued)

Example of a MAP display:

```
   CM    MS    IOD    Net    PM    CCS    LNS    Trks    Ext    APPL
   .     .      .      .    4SysB   .      .       .      .      .

RMM               SysB     ManB     OffL     CBsy     ISTb      InSv
 0 Quit    PM        4        0       10        3        3       130
 2 Post_   RMM       0        1        1        0        0         2
 3
 4         RMM  5  ManB
 5 Trnsl
 6 Tst
 7 Bsy
 8 RTS
 9 OffL
10 LoadPM
11 Disp_
12 Next
13
14 QueryPM
15
16
17
18
```

At the RMM shelf

5

CAUTION
Static discharge may cause damage to circuit packs
Put on a wrist strap and connect it to the frame of the RMM before removing or inserting any cards. This protects the RMM against service degradation caused by static electricity.

Put on a wrist strap.

6

DANGER
Equipment damage
Take these precautions when removing or inserting a card:

1. Do not apply direct pressure to the components.
2. Do not force the card into its slot.

Remove the NT3X09 card as shown in the following figures.

a Locate the card to be removed on the appropriate shelf.

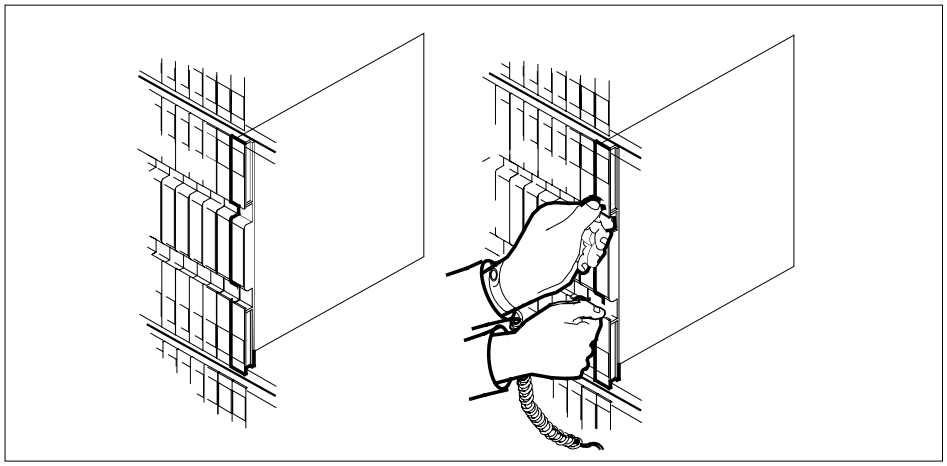

b Open the locking levers on the card to be replaced and gently pull the card towards you until it clears the shelf.

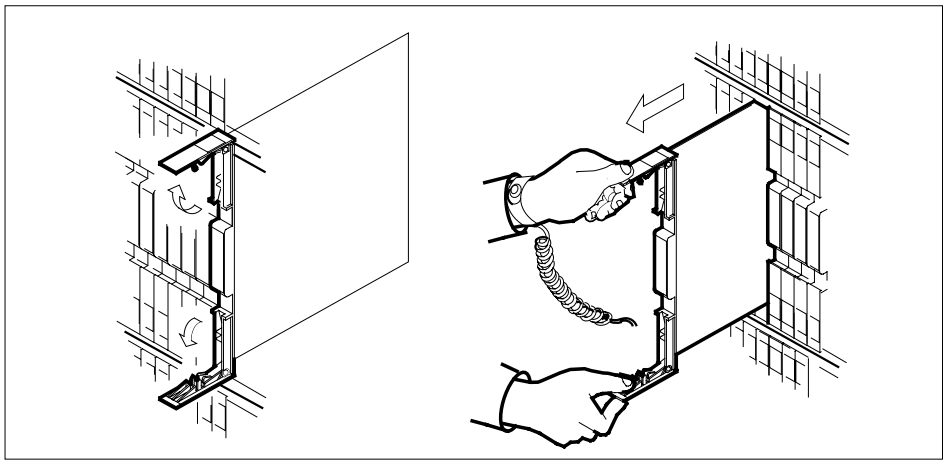

c Ensure the replacement card has the same PEC, including suffix, as the card you just removed.

7

DANGER
Equipment damage
Take these precautions when removing or inserting a card:

1. Do not apply direct pressure to the components.

2. Do not force the card into its slot.

NT3X09
in an RSC RMM (continued)

Open the locking levers on the replacement card.

Align the card with the slots in the shelf and gently slide the card into the shelf.

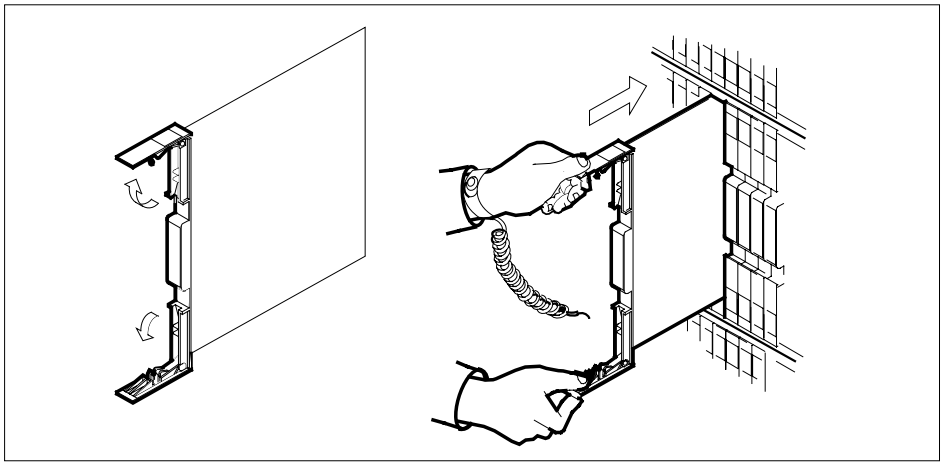

8 Seat and lock the card.

a Using your fingers or thumbs, push on the upper and lower edges of the faceplate to ensure the card is fully seated in the shelf.

b Close the locking levers.

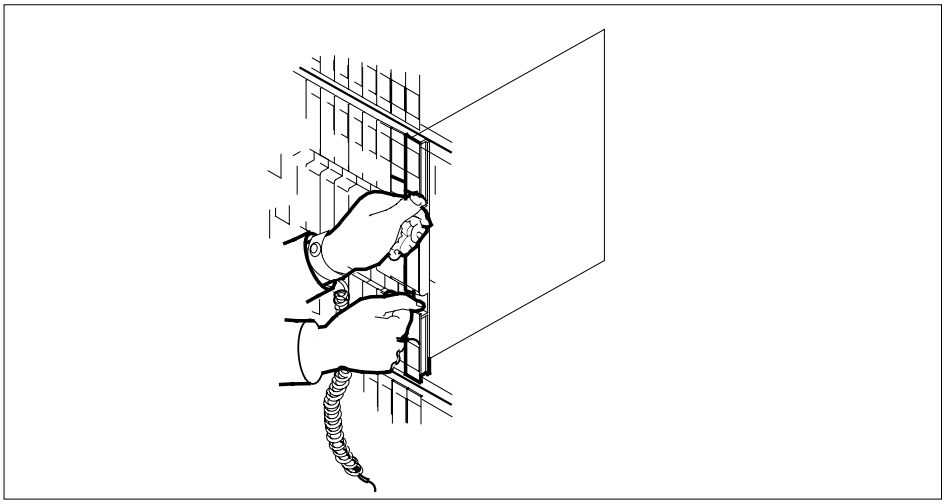

9 Use the following information to determine the next step in this procedure.

If you entered this procedure from	Do
an alarm clearing procedure	step 13

If you entered this procedure from	Do
other	step 10

At the MAP display

10 Return the RMM to service by typing

>RTS

and pressing the Enter key.

If the RTS	Do
passed	step 11
failed	step 14

11 Send any faulty cards for repair according to local procedure.

12 Record the following items in office records:

- date the card was replaced
- serial number of the card
- symptoms that prompted replacement of the card

Go to step 15.

13 Return to the *Alarm Clearing Procedure* that directed you to this card replacement procedure. If necessary, go to the point where the faulty card list was produced, identify the next faulty card on the list, and go to the appropriate replacement procedure in this manual for that card.

14 Obtain further assistance in replacing this card by contacting personnel responsible for higher level of support.

15 You have successfully completed this procedure. Return to the maintenance procedure that directed you to this card replacement procedure and continue as directed.

NT3X09 in an RSC-S (DS-1) Model A RMM

Application

Use this procedure to replace an NT3X09 card in an RSC-S RMM.

PEC	Suffixes	Name
NT3X09	BA	Remote Metallic Test Access

Common procedures

None

Action

The following flowchart is only a summary of the procedure. To replace the card, use the instructions in the procedure that follows the flowchart.

NT3X09
in an RSC-S (DS-1) Model A RMM (continued)

Summary of card replacement procedure for an NT3X09 card in RSC-S RMM

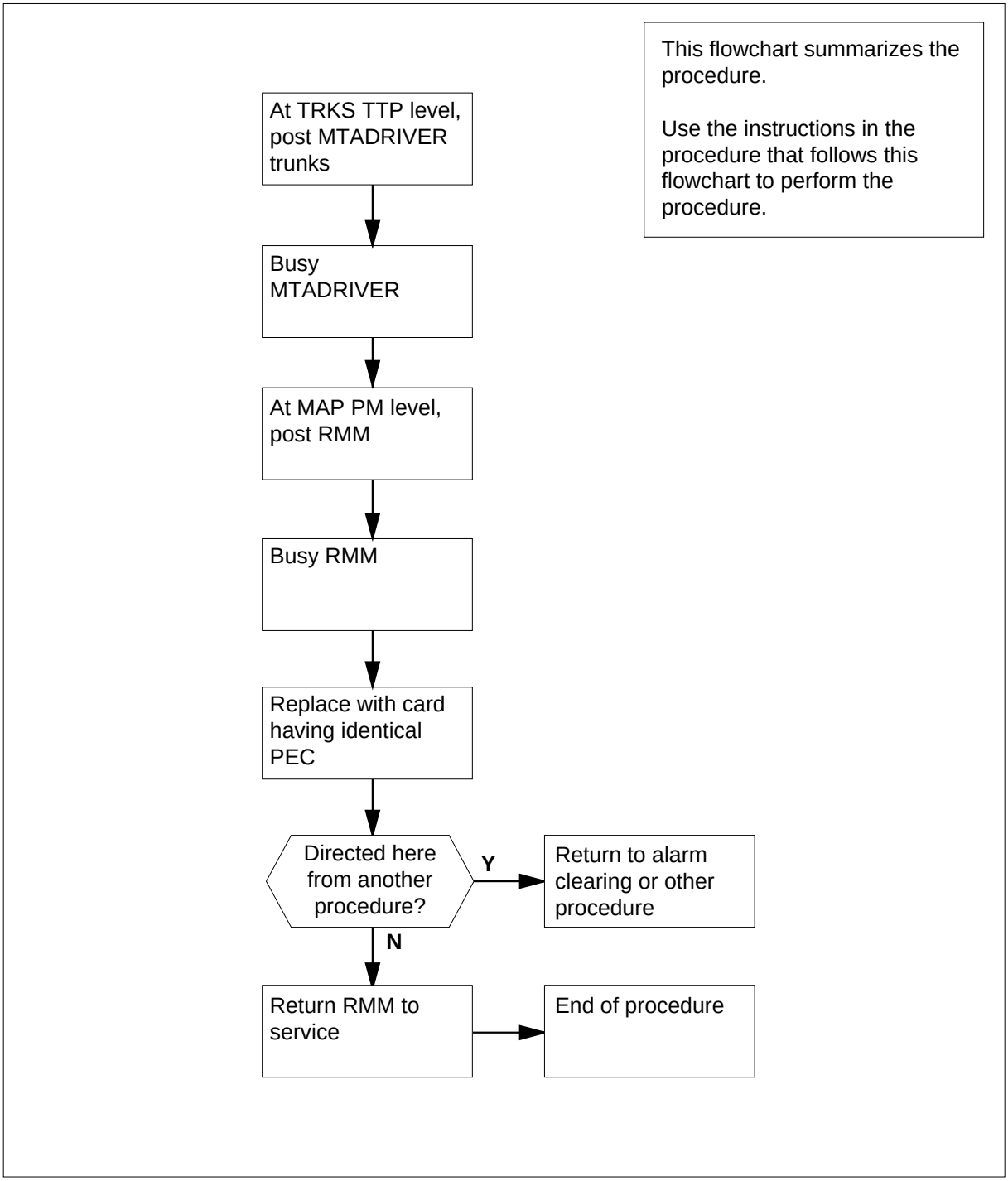

NT3X09
in an RSC-S (DS-1) Model A RMM (continued)

Replacing an NT3X09 card in RSC-S RMM

At the MAP

1 Proceed only if you have been directed to this card replacement procedure from a step in a maintenance procedure, are using the procedure for verifying or accepting cards, or have been directed to this procedure by your maintenance support group.

2 Obtain an NT3X09 replacement card. Ensure the replacement card has the same product equipment code (PEC), including suffix, as the card that is to be removed.

At the MAP terminal

3 Set the MAP display to the TTP level and post the trunk by typing

>MAPCI;MTC;TRKS;TTP;POST G MTADRIVER

and pressing the Enter key.

Example of a MAP display:

```
 CM    MS    IOD    Net    PM    CCS    LNS    Trks    Ext    Appl
 .      .      .      .      .      .      .       .       .      .

TTP
 0 Quit    POST    1           DELQ         BUSYQ          DIG
 2 Post_   TTP    6-009
 3 Seize_  CKT TYPE    PM NO. COM LANG  STA  S  R  DOT TE RESULT
 4         MISC   RMM  0  16    MATDRIVER    0 IDL
 5 Bsy_
 6 RTS_
 7 Tst_
 8
 9 CktInfo
10 CktLoc
11 Hold       TTP ID IS:   6-009
12 Next_      NO CKT, SET IS EMPTY
13 Rls_       TTP:
14 Ckt_       LAST CKTN  =  1
15 Trnslvf_   SHORT CLLI IS:  MTADRI
16 Stksdr_    OK, CKT POSTED
17 Pads_
18 Level_
```

4 Busy the MTADRIVER by typing

>BSY;BSY;INB;ALL

and pressing the Enter key.

Example of a MAP display:

```
 CM    MS    IOD     Net    PM   CCS   LNS   Trks    Ext    Appl
 .      .      .      .      .     .     .     .       .      .

TTP
 0 Quit    POST    1            DELQ         BUSYQ          DIG
 2 Post_   TTP    6-009
 3 Seize_  CKT TYPE  PM NO.  COM LANG  STA  S  R  DOT TE RESULT
 4            MISC    RMM  0  16      MATDRIVER    0 INB
 5 Bsy_
 6 RTS_
 7 Tst_
 8
 9 CktInfo
10 CktLoc
11 Hold       TTP ID IS:   6-009
12 Next_      NO CKT, SET IS EMPTY
13 Rls_       TTP:
14 Ckt_       LAST CKTN  =  1
15 Trnslvf_   SHORT CLLI IS:  MTADRI
16 Stksdr_    OK, CKT POSTED
17 Pads_
18 Level_
```

5 Set the MAP display to the PM level and post the RMM by typing

>MAPCI;MTC;PM;POST RMM rmm_no

and pressing the Enter key.

where

rmm_no
is the number of the RMM where the card is to be removed

Example of a MAP display:

NT3X09 in an RSC-S (DS-1) Model A RMM (continued)

```
 CM    MS   IOD    Net    PM    CCS    LNS    Trks    Ext    Appl
 .      .     .      .      .     .      .      .       .       .

RMM           SysB     ManB     OffL     CBsy     ISTb      InSv
 0 Quit   PM      0        0        0        0        0       130
 2 Post_  RMM     0        0        0        0        0         0
 3
 4         RMM  5  INSV
 5 Trnsl
 6 Tst
 7 Bsy
 8 RTS
 9 OffL
10 LoadPM
11 Disp_
12 Next
13
14 QueryPM
15
16
17
18
```

6 Busy the RMM by typing

>BSY

and pressing the Enter key.

Example of a MAP display:

NT3X09
in an RSC-S (DS-1) Model A RMM (continued)

```
 CM    MS    IOD    Net    PM    CCS    LNS    Trks    Ext    Appl
 .     .     .      .    1ManB   .      .       .       .       .

RMM            SysB     ManB     OffL     CBsy     ISTb      InSv
 0 Quit  PM       4        0       10        0        0       130
 2 Post_ RMM      0        1        0        0        0         0
 3
 4         RMM
 5  ManB
 5 Trnsl
 6 Tst
 7 Bsy
 8 RTS
 9 OffL
10 LoadPM
11 Disp_
12 Next
13
14 QueryPM
15
16
17
18
```

At the RMM shelf

7

CAUTION
Static discharge may cause damage to circuit packs
Put on a wrist strap and connect it to the frame of the RMM before removing any cards. This protects the RMM against service degradation caused by static electricity.

Put on a wrist strap.

8 Remove the NT3X09 card as shown in the following figures.

a Locate the card to be removed on the appropriate shelf.

NT3X09
in an RSC-S (DS-1) Model A RMM (continued)

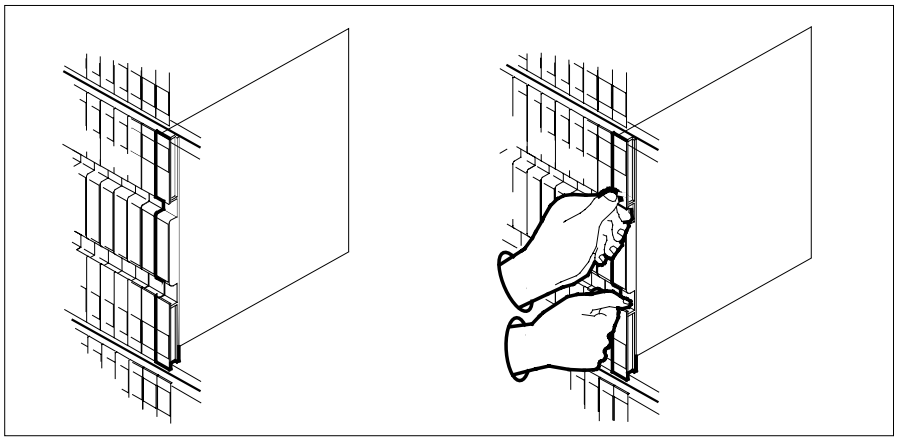

b Open the locking levers on the card to be replaced and gently pull the card toward you until it clears the shelf.

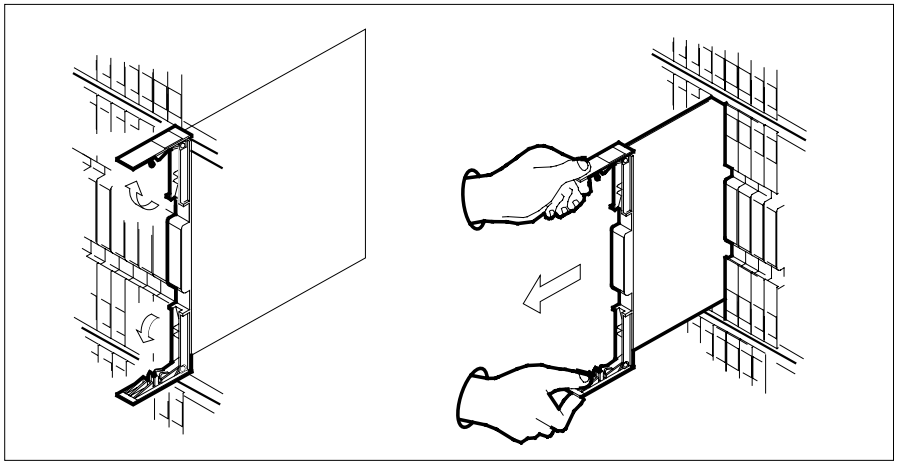

c Ensure the replacement card has the same PEC, including suffix, as the card you just removed.

9 Open the locking levers on the replacement card.

a Align the card with the slots in the shelf.

b Gently slide the card into the shelf.

NT3X09
in an RSC-S (DS-1) Model A RMM (continued)

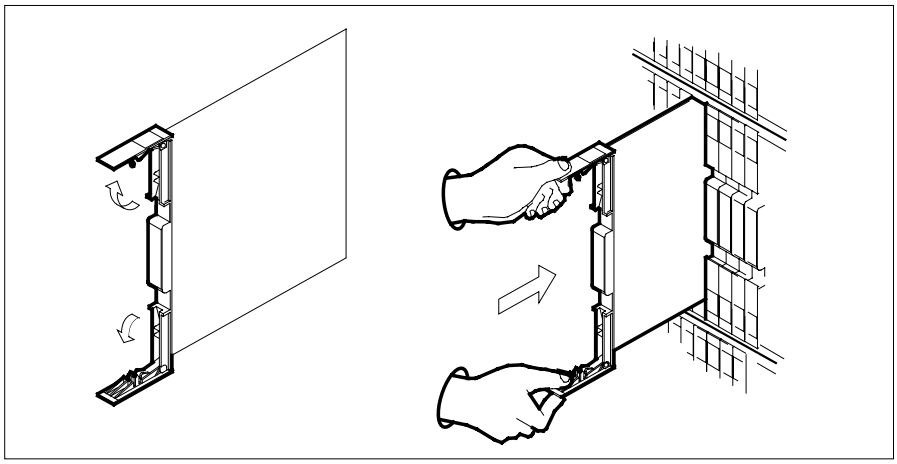

10

DANGER
Equipment damage
Take these precautions when removing or inserting a card:

1. Do not apply direct pressure to the components.
2. Do not force the card into the slot.

Seat and lock the card.

a Using your fingers or thumbs, push on the upper and lower edges of the faceplate to ensure the card is fully seated in the shelf.

b Close the locking levers.

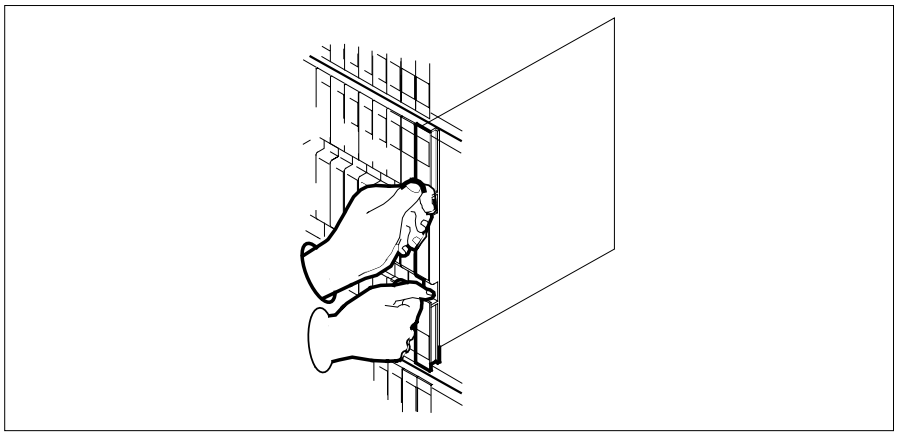

NT3X09
in an RSC-S (DS-1) Model A RMM (continued)

11 Use the following information to determine where to proceed.

If you entered this procedure from	Do
alarm clearing procedures	step 18
other	step 12

At the MAP terminal

12 Test the RMM by typing

>TST

and pressing the Enter key.

If TST	Do
passed	step 13
failed	step 18

13 Return the RMM to service by typing

>RTS

and pressing the Enter key.

If RTS	Do
passed	step 14
failed	step 19

14 Post the MTADRIVER by typing

>TRKS;TTP;POST G MTADRIVER

and pressing the Enter key.

15 Return the MTADRIVER to service by typing

>BSY ALL;RTS ALL

and pressing the Enter key.

16 Send any faulty cards for repair according to local procedure.

17 Record the date the card was replaced, the serial number of the card, and the symptoms that prompted replacement of the card. Go to step 20.

18 Return to the procedure that directed you to this procedure. At the point where a faulty card list was produced, identify the next faulty card on the list and go to the appropriate card replacement procedure for that card in this manual.

19 Obtain further assistance in replacing this card by contacting operating company maintenance personnel.

NT3X09
in an RSC-S (DS-1) Model A RMM (end)

20 You have successfully completed this procedure. Return to the maintenance procedure that directed you to this card replacement procedure and continue as directed.

NT3X09 in an RSC-S (DS-1) Model B RMM

Application

Use this procedure to replace an NT3X09 card in an RSC-S RMM.

PEC	Suffixes	Name
NT3X09	BA	Remote Metallic Test Access

Common procedures

None

Action

The following flowchart is only a summary of the procedure. To replace the card, use the instructions in the procedure that follows the flowchart.

NT3X09
in an RSC-S (DS-1) Model B RMM (continued)

Summary of card replacement procedure for an NT3X09 card in RSC-S RMM

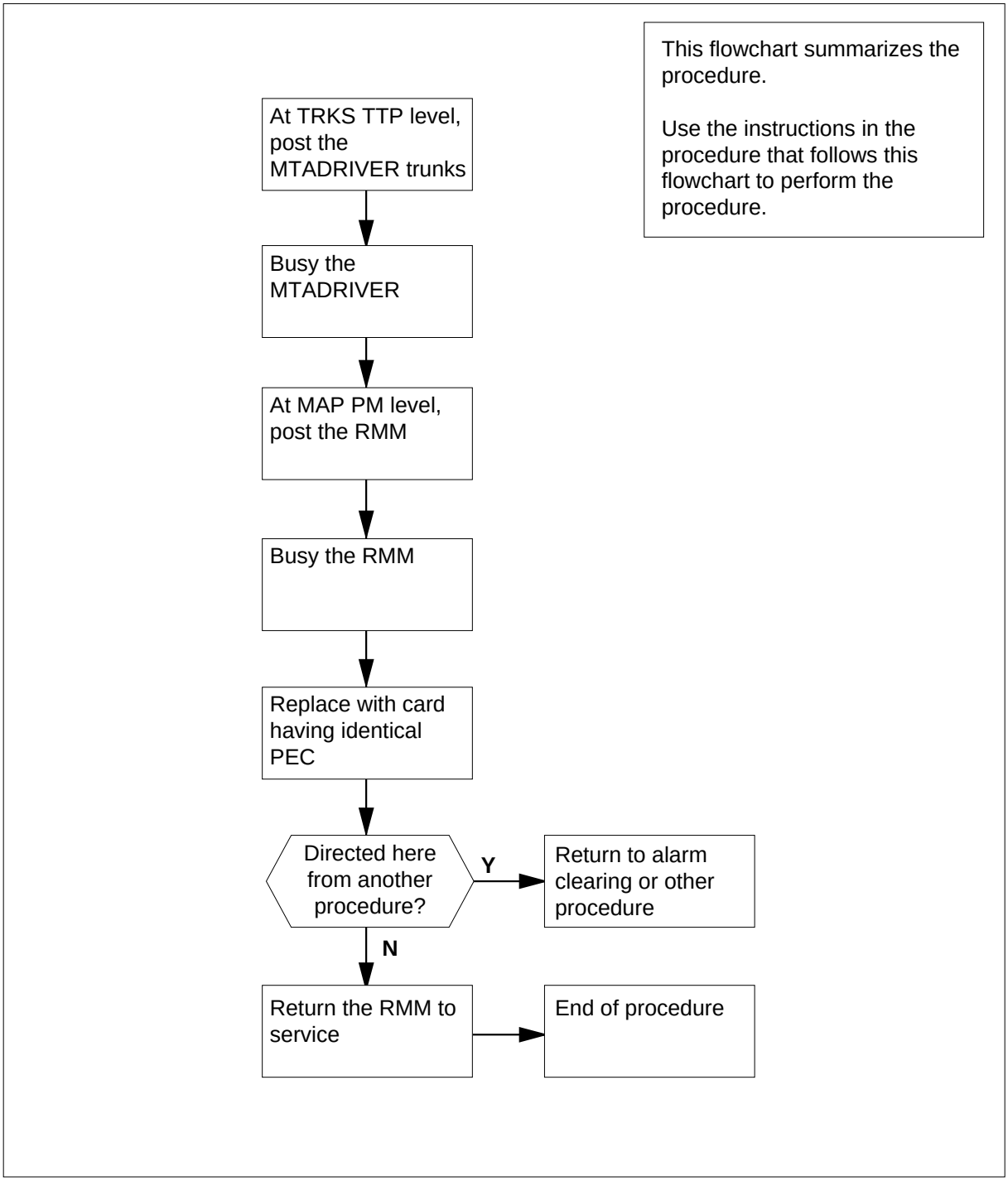

NT3X09
in an RSC-S (DS-1) Model B RMM (continued)

Replacing an NT3X09 card in RSC-S RMM

At the MAP

1 Proceed only if you have been directed to this card replacement procedure from a step in a maintenance procedure, are using the procedure for verifying or accepting cards, or have been directed to this procedure by your maintenance support group.

2 Obtain an NT3X09 replacement card. Ensure the replacement card has the same product equipment code (PEC), including suffix, as the card that is to be removed.

At the MAP terminal

3 Set the MAP display to the TTP level and post the trunk by typing

>MAPCI;MTC;TRKS;TTP;POST G MTADRIVER

and pressing the Enter key.

Example of a MAP display:

```
 CM    MS    IOD    Net    PM    CCS    LNS    Trks    Ext    Appl
 .      .      .      .      .      .      .       .       .      .

TTP
 0 Quit    POST    1           DELQ         BUSYQ          DIG
 2 Post_   TTP    6-009
 3 Seize_  CKT TYPE    PM NO. COM LANG  STA  S  R  DOT TE RESULT
 4         MISC   RMM  0  16    MATDRIVER    0 IDL
 5 Bsy_
 6 RTS_
 7 Tst_
 8
 9 CktInfo
10 CktLoc
11 Hold       TTP ID IS:   6-009
12 Next_      NO CKT, SET IS EMPTY
13 Rls_       TTP:
14 Ckt_       LAST CKTN  =  1
15 Trnslvf_   SHORT CLLI IS:  MTADRI
16 Stksdr_    OK, CKT POSTED
17 Pads_
18 Level_
```

4 Busy the MTADRIVER by typing

>BSY;BSY;INB;ALL

and pressing the Enter key.

Example of a MAP display:

```
 CM    MS    IOD     Net    PM   CCS   LNS   Trks    Ext    Appl
 .      .      .      .      .     .     .     .       .      .

TTP
 0 Quit    POST    1            DELQ         BUSYQ          DIG
 2 Post_   TTP    6-009
 3 Seize_  CKT TYPE  PM NO.  COM LANG  STA  S  R  DOT TE RESULT
 4            MISC    RMM  0  16      MATDRIVER    0 INB
 5 Bsy_
 6 RTS_
 7 Tst_
 8
 9 CktInfo
10 CktLoc
11 Hold       TTP ID IS:   6-009
12 Next_      NO CKT, SET IS EMPTY
13 Rls_       TTP:
14 Ckt_       LAST CKTN  =  1
15 Trnslvf_   SHORT CLLI IS:  MTADRI
16 Stksdr_    OK, CKT POSTED
17 Pads_
18 Level_
```

5 Set the MAP display to the PM level and post the RMM by typing

>MAPCI;MTC;PM;POST RMM rmm_no

and pressing the Enter key.

where

rmm_no
is the number of the RMM where the card is to be removed

Example of a MAP display:

NT3X09
in an RSC-S (DS-1) Model B RMM (continued)

```
 CM    MS   IOD    Net    PM    CCS    LNS    Trks    Ext    Appl
 .      .     .      .      .     .      .      .       .       .

RMM            SysB     ManB     OffL     CBsy     ISTb     InSv
 0 Quit   PM      0        0        0        0        0      130
 2 Post_  RMM     0        0        0        0        0        0
 3
 4         RMM  5  INSV
 5 Trnsl
 6 Tst
 7 Bsy
 8 RTS
 9 OffL
10 LoadPM
11 Disp_
12 Next
13
14 QueryPM
15
16
17
18
```

6 Busy the RMM by typing

>BSY

and pressing the Enter key.

Example of a MAP display:

NT3X09
in an RSC-S (DS-1) Model B RMM (continued)

```
 CM    MS    IOD    Net    PM    CCS    LNS    Trks    Ext    Appl
 .      .     .      .    1ManB   .      .       .       .       .

RMM            SysB     ManB     OffL     CBsy     ISTb      InSv
 0 Quit  PM       4        0       10        0        0       130
 2 Post_ RMM      0        1        0        0        0         0
 3
 4         RMM
 5  ManB
 5 Trnsl
 6 Tst
 7 Bsy
 8 RTS
 9 OffL
10 LoadPM
11 Disp_
12 Next
13
14 QueryPM
15
16
17
18
```

At the RMM shelf

7

CAUTION
Static discharge may cause damage to circuit packs
Put on a wrist strap and connect it to the frame of the RMM before removing any cards. This protects the RMM against service degradation caused by static electricity.

Put on a wrist strap.

8 Remove the NT3X09 card as shown in the following figures.

a Locate the card to be removed on the appropriate shelf.

NT3X09
in an RSC-S (DS-1) Model B RMM (continued)

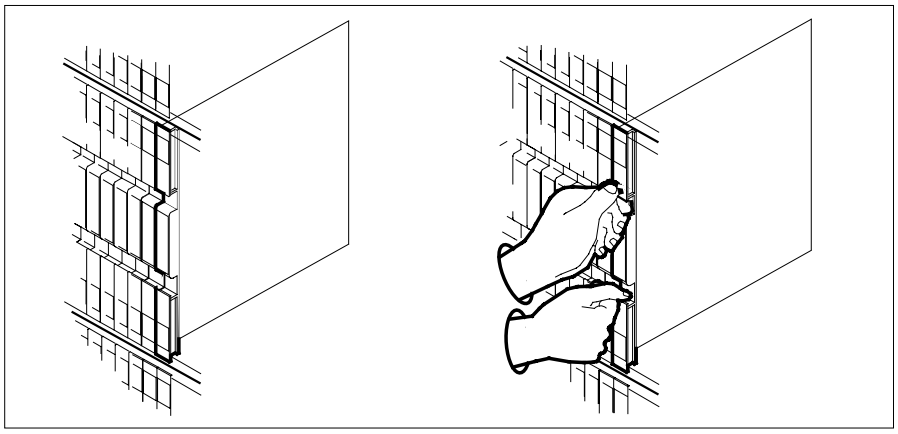

b Open the locking levers on the card to be replaced and gently pull the card toward you until it clears the shelf.

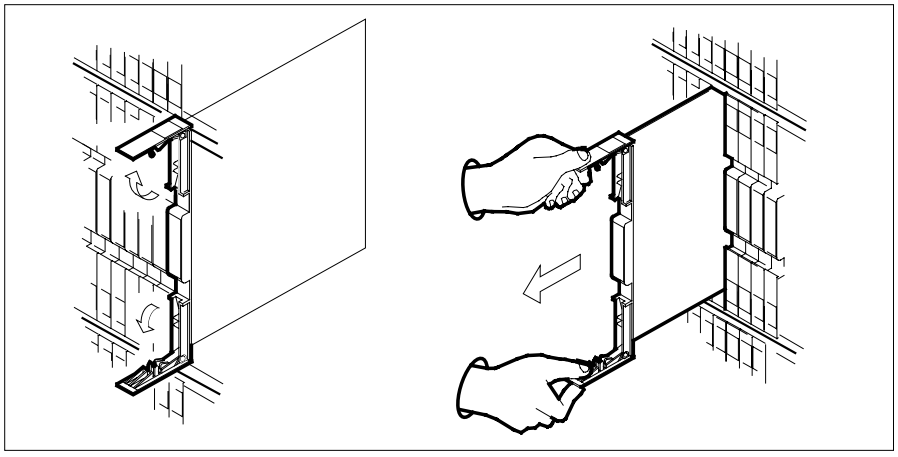

c Ensure the replacement card has the same PEC, including suffix, as the card you just removed.

9 Open the locking levers on the replacement card.

a Align the card with the slots in the shelf.

b Gently slide the card into the shelf.

NT3X09
in an RSC-S (DS-1) Model B RMM (continued)

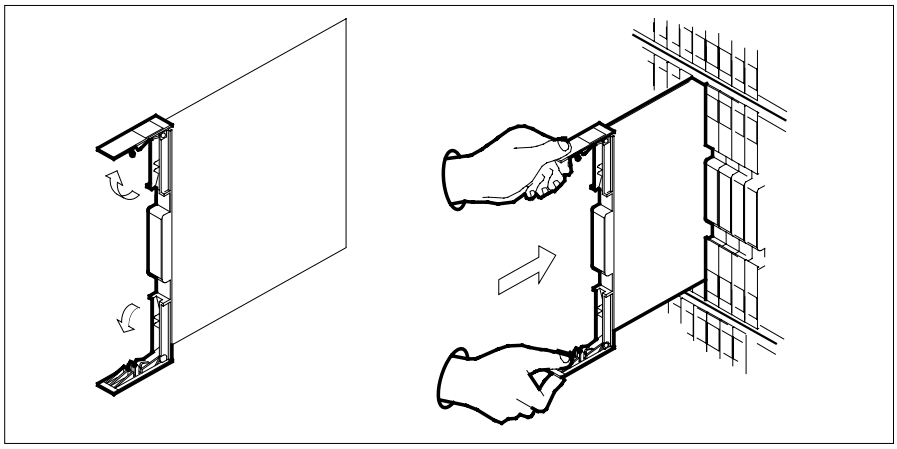

10

DANGER
Equipment damage
Take these precautions when removing or inserting a card:

1. Do not apply direct pressure to the components.
2. Do not force the card into the slot.

Seat and lock the card.

a Using your fingers or thumbs, push on the upper and lower edges of the faceplate to ensure the card is fully seated in the shelf.

b Close the locking levers.

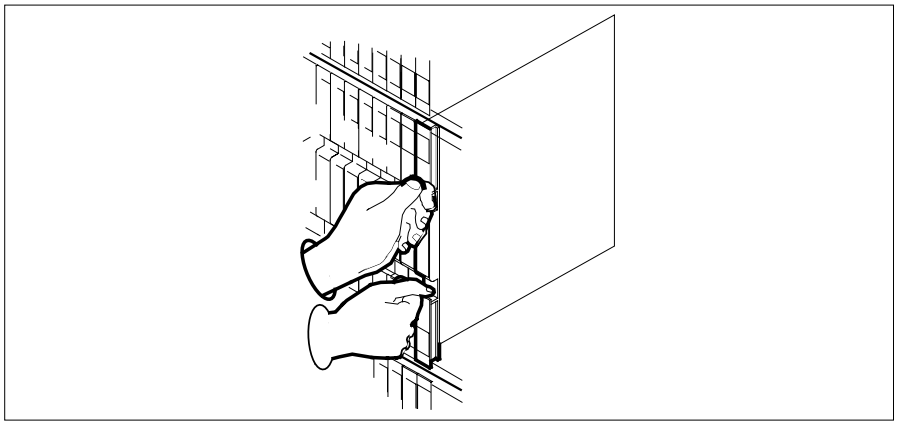

NT3X09
in an RSC-S (DS-1) Model B RMM (continued)

11 Use the following information to determine where to proceed.

If you entered this procedure from	Do
alarm clearing procedures	step 18
other	step 12

At the MAP terminal

12 Test the RMM by typing

>TST

and pressing the Enter key.

If TST	Do
passed	step 13
failed	step 18

13 Return the RMM to service by typing

>RTS

and pressing the Enter key.

If RTS	Do
passed	step 14
failed	step 19

14 Post the MTADRIVER by typing

>TRKS;TTP;POST G MTADRIVER

and pressing the Enter key.

15 Return the MTADRIVER to service by typing

>BSY ALL;RTS ALL

and pressing the Enter key.

16 Send any faulty cards for repair according to local procedure.

17 Record the date the card was replaced, the serial number of the card, and the symptoms that prompted replacement of the card. Go to step 20.

18 Return to the procedure that directed you to this procedure. At the point where a faulty card list was produced, identify the next faulty card on the list and go to the appropriate card replacement procedure for that card in this manual.

19 Obtain further assistance in replacing this card by contacting operating company maintenance personnel.

NT3X09
in an RSC-S (DS-1) Model B RMM (end)

20 You have successfully completed this procedure. Return to the maintenance procedure that directed you to this card replacement procedure and continue as directed.

NT3X09 in an RSC-S (PCM-30) Model B RMM

Application

Use this procedure to replace an NT3X09 card in an RSC-S RMM.

PEC	Suffixes	Name
NT3X09	BA	Remote Metallic Test Access

Common procedures

None

Action

The following flowchart is only a summary of the procedure. To replace the card, use the instructions in the procedure that follows the flowchart.

NT3X09
in an RSC-S (PCM-30) Model B RMM (continued)

Summary of card replacement procedure for an NT3X09 card in RSC-S RMM

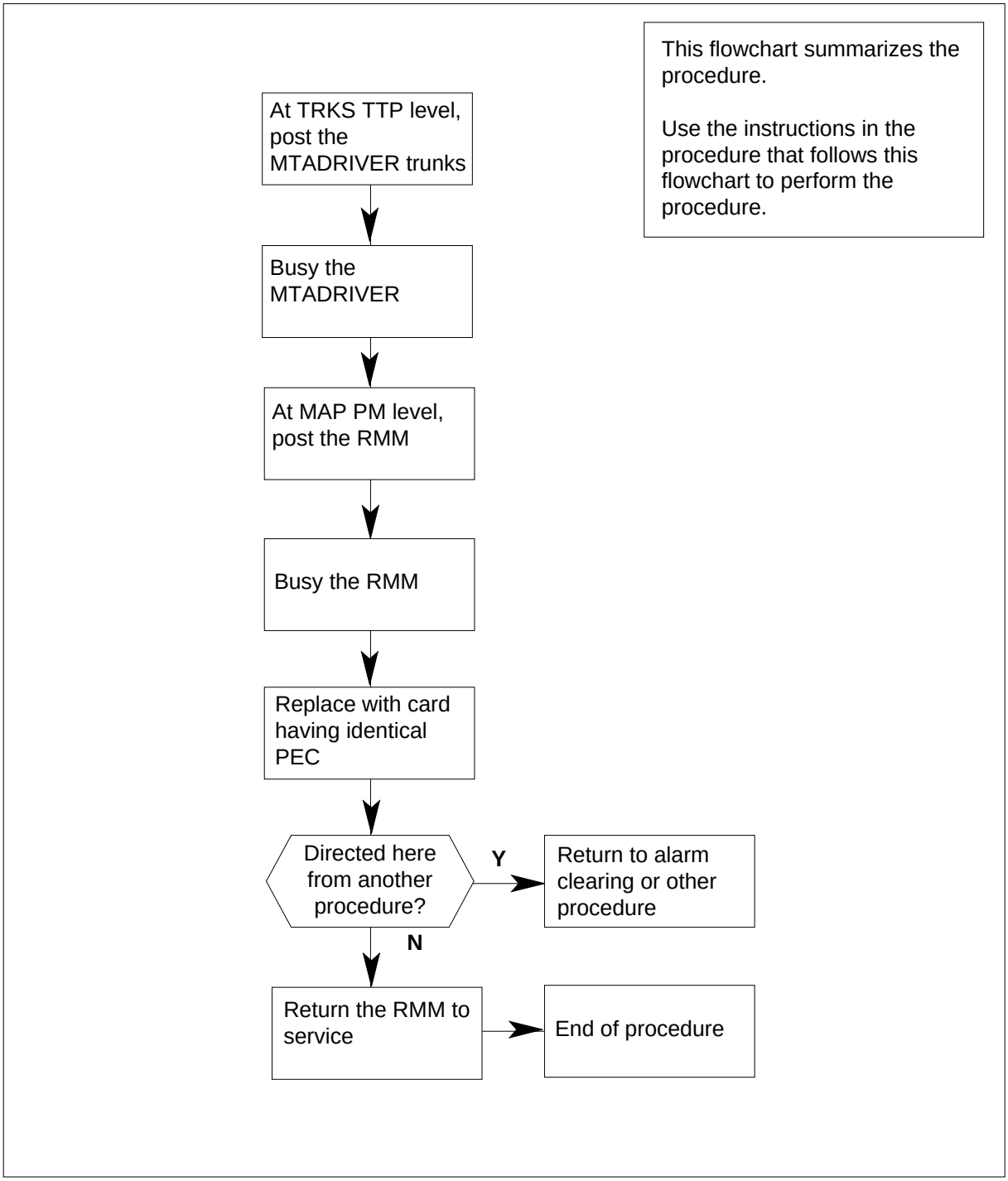

NT3X09
in an RSC-S (PCM-30) Model B RMM (continued)

Replacing an NT3X09 card in RSC-S RMM

At the MAP

1 Proceed only if you have been directed to this card replacement procedure from a step in a maintenance procedure, are using the procedure for verifying or accepting cards, or have been directed to this procedure by your maintenance support group.

2 Obtain an NT3X09 replacement card. Ensure the replacement card has the same product equipment code (PEC), including suffix, as the card that is to be removed.

At the MAP terminal

3 Set the MAP display to the TTP level and post the trunk by typing

`>MAPCI;MTC;TRKS;TTP;POST P RMM rmm_no ckt_no`

and pressing the Enter key.

where

rmm_no
is the number of the RMM with the faulty MTADRIVER card

ckt_no
is the number of the faulty MTADRIVER card

Example of a MAP display:

```
 CM    MS    IOD    Net    PM    CCS    LNS    Trks    Ext    Appl
 .      .      .      .      .      .      .      .       .      .
TTP
 0 Quit     POST    1           DELQ         BUSYQ          DIG
 2 Post_   TTP    6-009
 3 Seize_  CKT TYPE    PM NO. COM LANG  STA  S  R  DOT TE RESULT
 4         MISC   RMM  0  16    MATDRIVER    0 IDL
 5 Bsy_
 6 RTS_
 7 Tst_
 8
 9 CktInfo
10 CktLoc
11 Hold       TTP ID IS:   6-009
12 Next_      NO CKT, SET IS EMPTY
13 Rls_       TTP:
14 Ckt_       LAST CKTN  =  1
15 Trnslvf_   SHORT CLLI IS:  MTADRI
16 Stksdr_    OK, CKT POSTED
17 Pads_
18 Level_
```

NT3X09
in an RSC-S (PCM-30) Model B RMM (continued)

4 Busy the MTADRIVER by typing

>BSY;BSY INB

and pressing the Enter key.

Example of a MAP display:

```
 CM    MS    IOD     Net    PM   CCS   LNS   Trks    Ext    Appl
 .      .      .      .      .     .     .     .       .      .
TTP
 0 Quit    POST    1            DELQ         BUSYQ          DIG
 2 Post_   TTP    6-009
 3 Seize_  CKT TYPE  PM NO.  COM LANG  STA  S  R  DOT TE RESULT
 4            MISC    RMM  0  16      MATDRIVER    0 INB
 5 Bsy_
 6 RTS_
 7 Tst_
 8
 9 CktInfo
10 CktLoc
11 Hold       TTP ID IS:   6-009
12 Next_      NO CKT, SET IS EMPTY
13 Rls_       TTP:
14 Ckt_       LAST CKTN  =  1
15 Trnslvf_   SHORT CLLI IS:  MTADRI
16 Stksdr_    OK, CKT POSTED
17 Pads_
18 Level_
```

5 Set the MAP display to the PM level and post the RMM by typing

>MAPCI;MTC;PM;POST RMM rmm_no

and pressing the Enter key.

where

rmm_no
is the number of the RMM where the card is to be removed

Example of a MAP display:

NT3X09
in an RSC-S (PCM-30) Model B RMM (continued)

```
 CM    MS   IOD    Net    PM    CCS    LNS    Trks    Ext    Appl
 .      .     .      .      .     .      .      .       .       .
RMM          SysB     ManB     OffL     CBsy     ISTb      InSv
 0 Quit   PM      0        0        0        0        0       130
 2 Post_  RMM     0        0        0        0        0         0
 3
 4         RMM  5  INSV
 5 Trnsl
 6 Tst
 7 Bsy
 8 RTS
 9 OffL
10 LoadPM
11 Disp_
12 Next
13
14 QueryPM
15
16
17
18
```

6 Busy the RMM by typing

>BSY

and pressing the Enter key.

Example of a MAP display:

```
 CM    MS    IOD    Net    PM    CCS    LNS    Trks    Ext    Appl
 .      .     .      .    1ManB   .      .       .       .       .
RMM           SysB     ManB     OffL     CBsy     ISTb      InSv
 0 Quit  PM       4        0       10        0        0       130
 2 Post_ RMM      0        1        0        0        0         0
 3
 4         RMM
 5  ManB
 5 Trnsl
 6 Tst
 7 Bsy
 8 RTS
 9 OffL
10 LoadPM
11 Disp_
12 Next
13
14 QueryPM
15
16
17
18
```

NT3X09
in an RSC-S (PCM-30) Model B RMM (continued)

At the RMM shelf

7

CAUTION
Static discharge may cause damage to circuit packs
Put on a wrist strap and connect it to the frame of the RMM before removing any cards. This protects the RMM against service degradation caused by static electricity.

Put on a wrist strap.

8 Remove the NT3X09 card as shown in the following figures.

a Locate the card to be removed on the appropriate shelf.

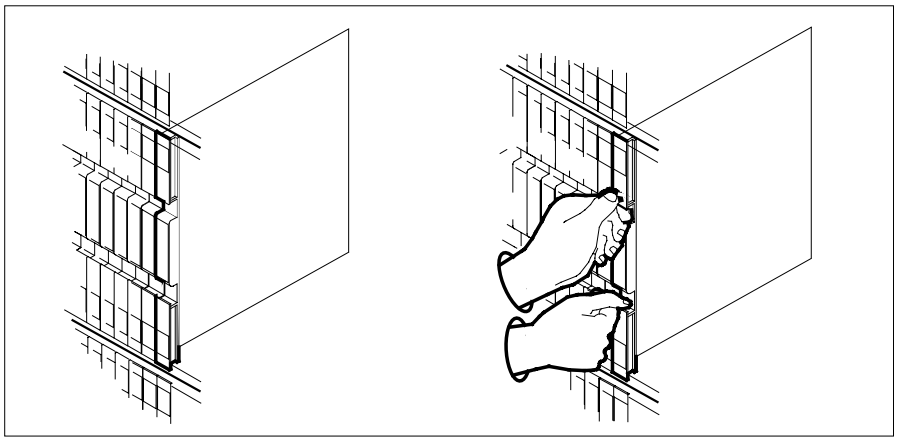

b Open the locking levers on the card to be replaced and gently pull the card toward you until it clears the shelf.

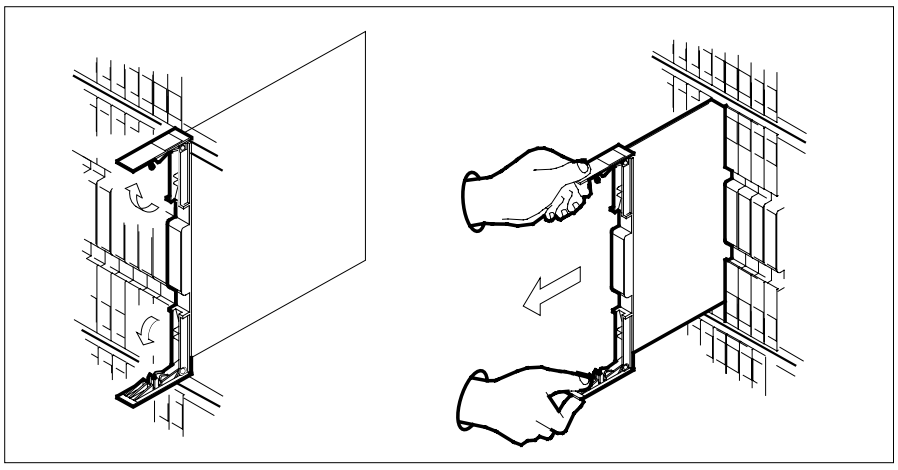

NT3X09
in an RSC-S (PCM-30) Model B RMM (continued)

c Ensure the replacement card has the same PEC, including suffix, as the card you just removed.

9 Open the locking levers on the replacement card.

a Align the card with the slots in the shelf.

b Gently slide the card into the shelf.

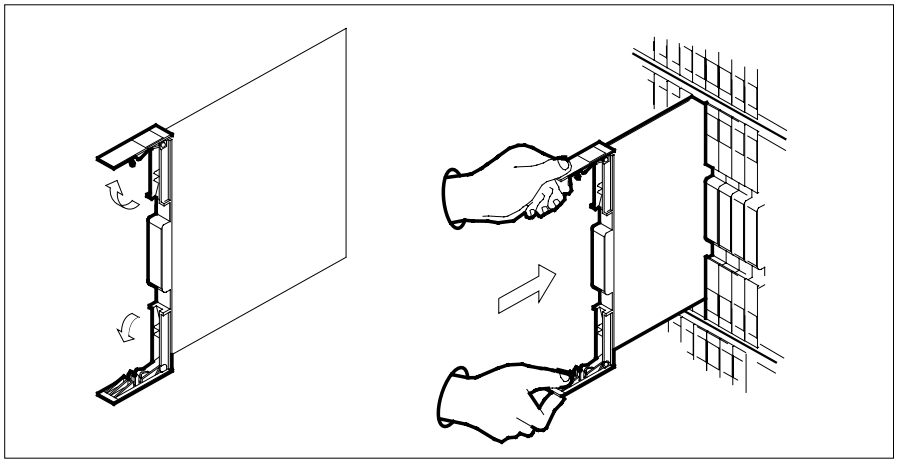

10

DANGER

Equipment damage

Take these precautions when removing or inserting a card:

1. Do not apply direct pressure to the components.
2. Do not force the card into the slot.

Seat and lock the card.

a Using your fingers or thumbs, push on the upper and lower edges of the faceplate to ensure the card is fully seated in the shelf.

b Close the locking levers.

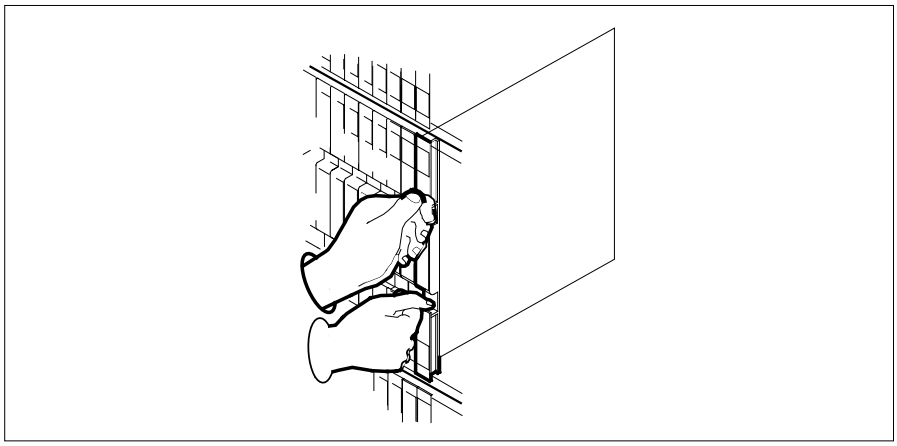

11 Use the following information to determine where to proceed.

If you entered this procedure from	Do
alarm clearing procedures	step 18
other	step 12

At the MAP terminal

12 Test the RMM by typing

>TST

and pressing the Enter key.

If TST	Do
passed	step 13
failed	step 18

13 Return the RMM to service by typing

>RTS

and pressing the Enter key.

If RTS	Do
passed	step 14
failed	step 19

14 Post the MTADRIVER by typing

>TRKS;TTP;POST P RMM rmm_no ckt_no

NT3X09 in an RSC-S (PCM-30) Model B RMM (end)

and pressing the Enter key.

where

rmm_no
is the number of the RMM with the new MTADRIVER card

ckt_no
is the number of the new MTADRIVER card

15 Return the MTADRIVER to service by typing

```
>BSY ALL;RTS ALL
```

and pressing the Enter key.

16 Send any faulty cards for repair according to local procedure.

17 Record the date the card was replaced, the serial number of the card, and the symptoms that prompted replacement of the card. Go to step 20.

18 Return to the procedure that directed you to this procedure. At the point where a faulty card list was produced, identify the next faulty card on the list and go to the appropriate card replacement procedure for that card in this manual.

19 Obtain further assistance in replacing this card by contacting operating company maintenance personnel.

20 You have successfully completed this procedure. Return to the maintenance procedure that directed you to this card replacement procedure and continue as directed.

NT3X82 in an RSC RMM

Application

Use this procedure to replace the following card in an RSC RMM.

PEC	Suffixes	Name
NT3X82	AA, AC	OAU Dead System with unique audibles
NT3X82	AA, AD	OAU Dead System with common audibles

Common Procedures

None

Action

The following flowchart is a summary of the procedure. To replace the card, use the instructions in the procedure that follows the flowchart.

NT3X82
in an RSC RMM (continued)

Summary of card replacement procedure for an NT3X82 card in an RSC RMM

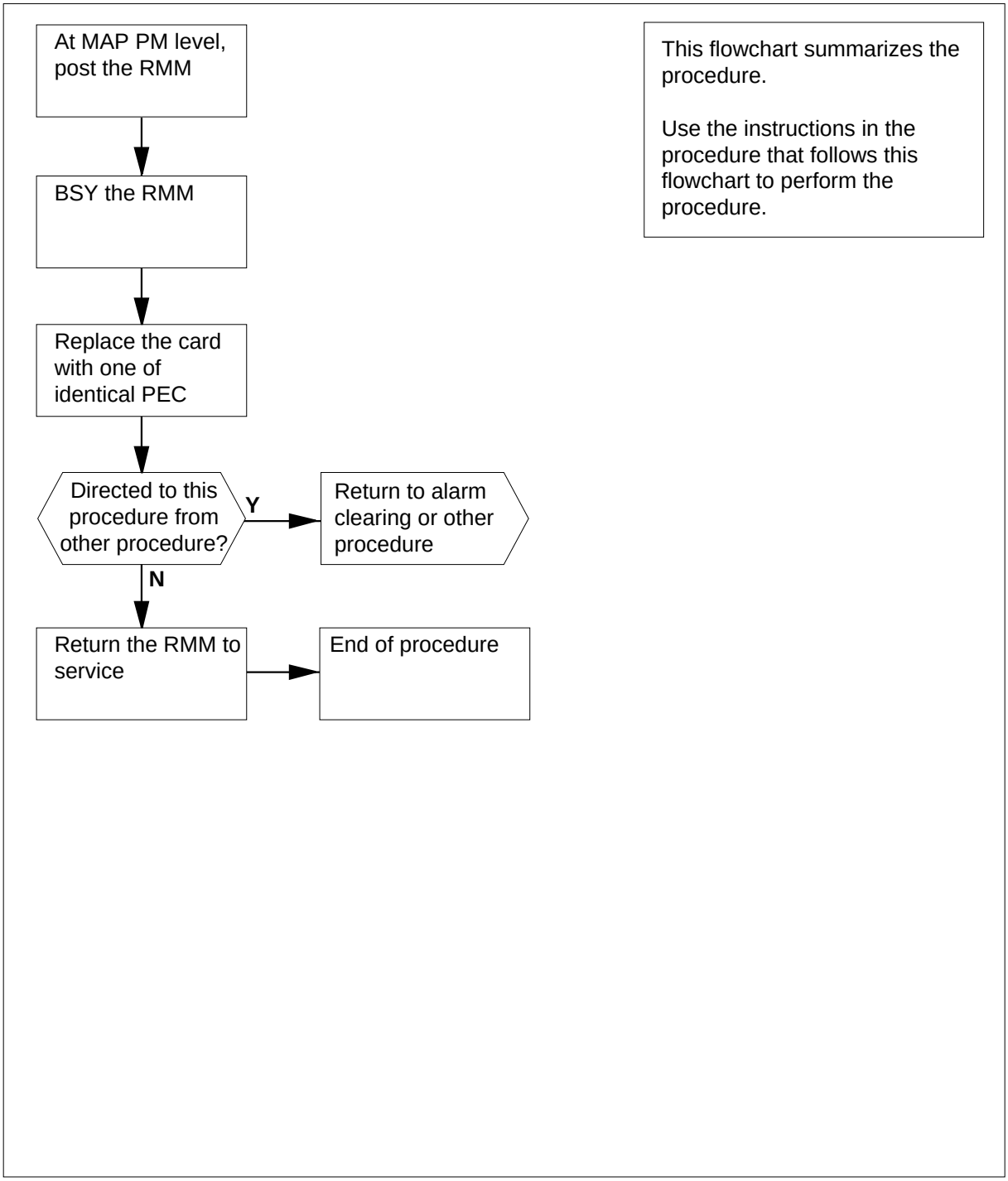

Replacing an NT3X82 card in RSC RMM

At your current location

1 Proceed only if you were either directed to this card replacement procedure from a step in a maintenance procedure, are using the procedure to verify or accept cards, or were directed to this procedure by your maintenance support group.

2 Obtain a replacement card. Ensure the replacement card has the same product equipment code (PEC) including suffix, as the card to be removed.

At the MAP display

3 Access the PM level and post the RMM by typing

>MAPCI;MTC;PM;POST RMM rmm_no

and pressing the Enter key.

where

rmm_no
is the number of the RMM where the card is to be removed

Example of a MAP display:

```
CM    MS     IOD    Net     PM    CCS    LNS     Trks     Ext    APPL
 .     .      .      .     4SysB   .      .       .        .      .

RMM                SysB     ManB     OffL     CBsy     ISTb     InSv
 0 Quit     PM       4        0        10       3        3       130
 2 Post_    RMM      0        1         1       0        0        2
 3
 4          RMM  5  INSV
 5 Trnsl
 6 Tst
 7 Bsy
 8 RTS
 9 OffL
10 LoadPM
11 Disp_
12 Next
13
14 QueryPM
15
16
17
18
```

4 Busy the RMM by typing

>BSY

and pressing the Enter key.

NT3X82
in an RSC RMM (continued)

Example of a MAP display:

```
CM    MS     IOD    Net     PM    CCS    LNS     Trks     Ext    APPL
 .     .      .      .     4SysB   .      .       .        .       .

RMM                 SysB     ManB     OffL     CBsy     ISTb     InSv
 0 Quit     PM        4        0        10       3        3       130
 2 Post_    RMM       0        1         1       0        0        2
 3
 4          RMM  5  ManB
 5 Trnsl
 6 Tst
 7 Bsy
 8 RTS
 9 OffL
10 LoadPM
11 Disp_
12 Next
13
14 QueryPM
15
16
17
18
```

At the RMM shelf

5

CAUTION
Static discharge may cause damage to circuit packs
Put on a wrist strap and connect it to the frame of the RMM before removing or inserting any cards. This protects the RMM against service degradation caused by static electricity.

Put on a wrist strap.

6

DANGER
Equipment damage
Take these precautions when removing or inserting a card:

1. Do not apply direct pressure to the components.

2. Do not force the card into its slot.

Remove the NT3X82 card as shown in the following figures.

NT3X82
in an RSC RMM (continued)

a Locate the card to be removed on the appropriate shelf.

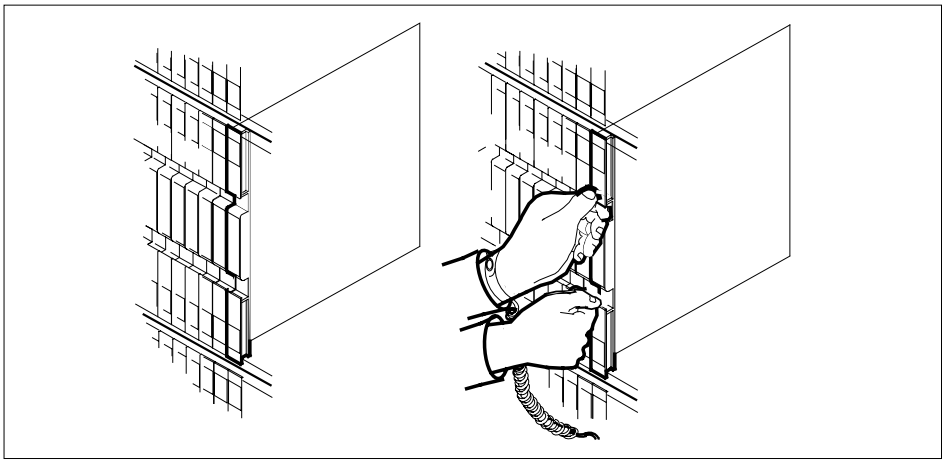

b Open the locking levers on the card to be replaced and gently pull the card towards you until it clears the shelf.

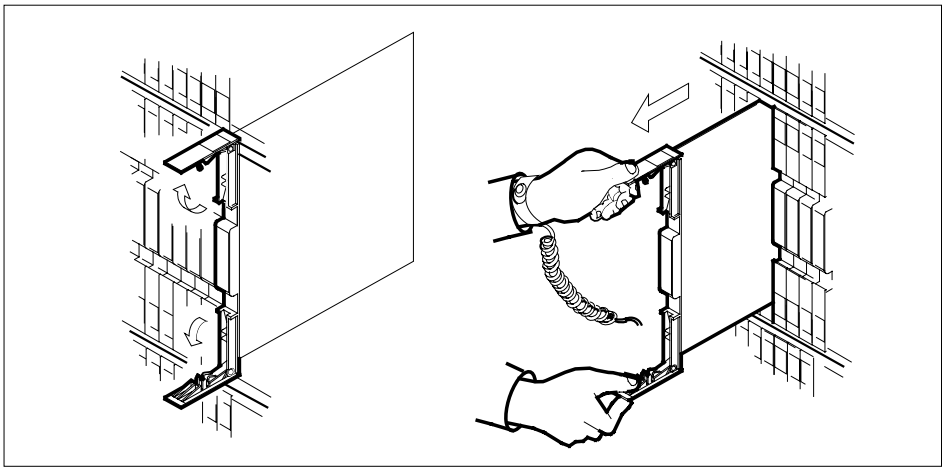

c Ensure the replacement card has the same PEC, including suffix, as the card you just removed.

7

DANGER
Equipment damage
Take these precautions when removing or inserting a card:

1. Do not apply direct pressure to the components.

2. Do not force the card into its slot.

NT3X82
in an RSC RMM (continued)

Open the locking levers on the replacement card.

Align the card with the slots in the shelf and gently slide the card into the shelf.

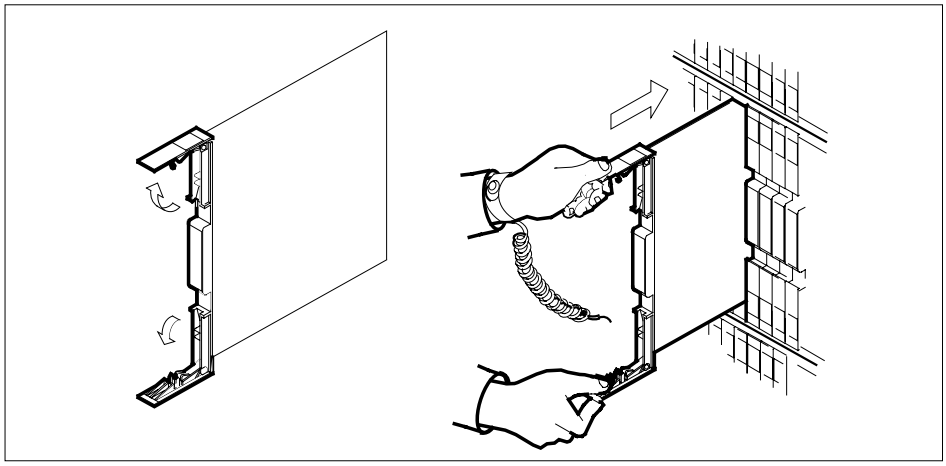

8 Seat and lock the card.

a Using your fingers or thumbs, push on the upper and lower edges of the faceplate to ensure the card is fully seated in the shelf.

b Close the locking levers.

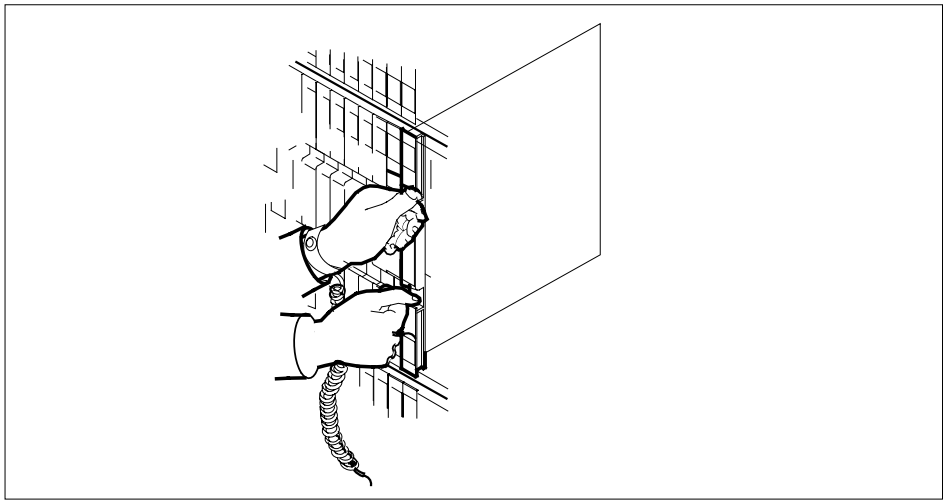

9 Use the following information to determine the next step in this procedure.

If you entered this procedure as	Do
an alarm clearing procedure	step 13
other	step 10

NT3X82 in an RSC RMM (end)

At the MAP display

10 Return the RMM to service by typing

>RTS

and pressing the Enter key.

If the RTS	Do
passed	step 11
failed	step 14

11 Send any faulty cards for repair according to local procedure.

12 Record the following items in office records:

- date the card was replaced
- serial number of the card
- symptoms that prompted replacement of the card

Go to step 15.

13 Return to the *Alarm Clearing Procedure* that directed you to this card replacement procedure. If necessary, go to the point where the faulty card list was produced, identify the next faulty card on the list, and go to the appropriate replacement procedure in this manual for that card.

14 Obtain further assistance in replacing this card by contacting personnel responsible for higher level of support.

15 You have successfully completed this procedure. Return to the maintenance procedure that directed you to this card replacement procedure and continue as directed.

NT3X83 in an RSC RMM

Application

Use this procedure to replace the following card in an RSC RMM.

PEC	Suffixes	Name
NT3X83	AA	OAU alarm transfer

Common Procedures

None

Action

The following flowchart is a summary of the procedure. To replace the card, use the instructions in the procedure that follows the flowchart.

NT3X83
in an RSC RMM (continued)

Summary of card replacement procedure for an NT3X83 card in an RSC RMM

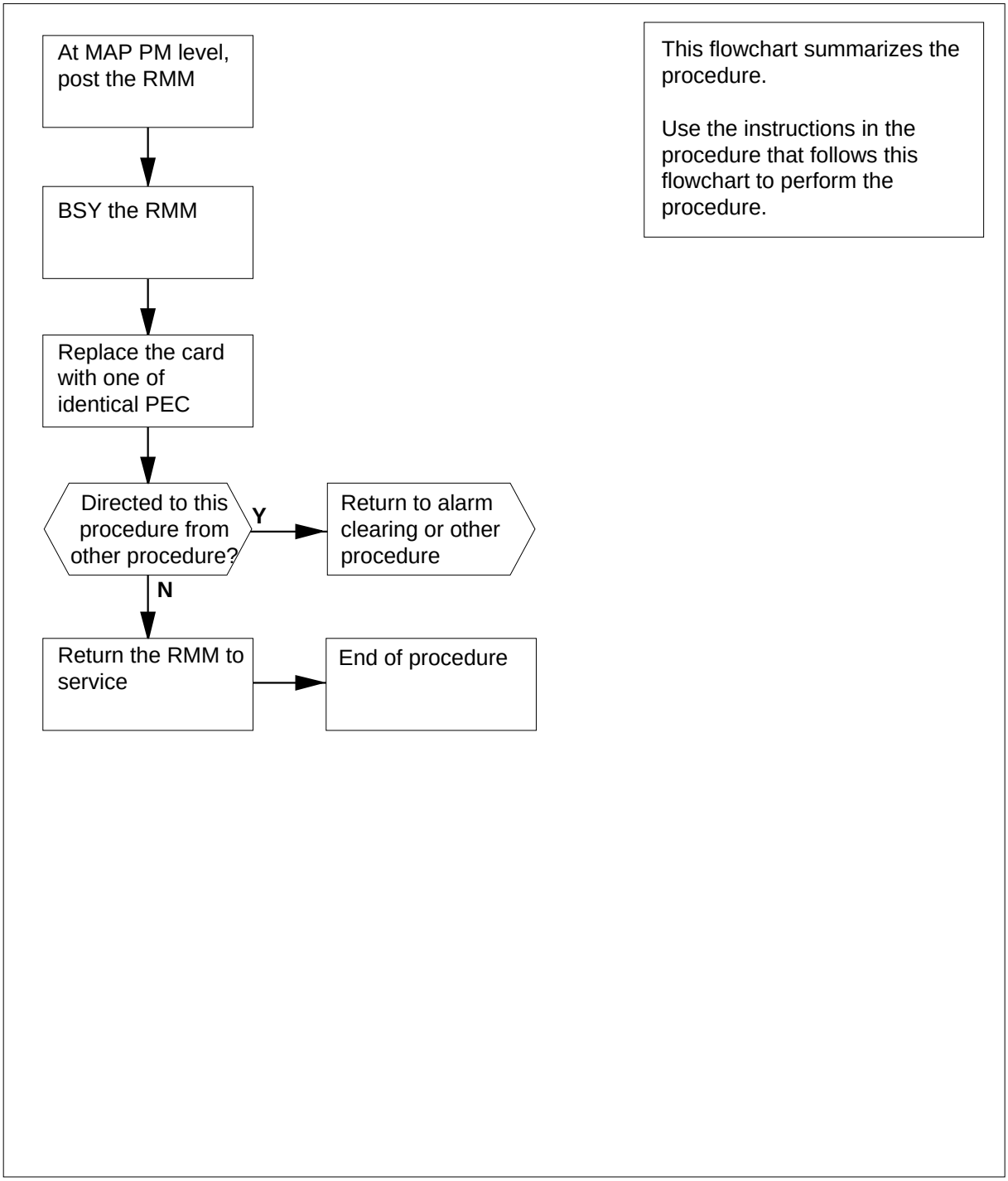

NT3X83
in an RSC RMM (continued)

Replacing an NT3X83 card in RSC RMM

At your current location

1 Proceed only if you were either directed to this card replacement procedure from a step in a maintenance procedure, are using the procedure to verify or accept cards, or were directed to this procedure by your maintenance support group.

2 Obtain a replacement card. Ensure the replacement card has the same product equipment code (PEC) including suffix, as the card to be removed.

At the MAP display

3 Access the PM level and post the RMM by typing

>MAPCI;MTC;PM;POST RMM rmm_no

and pressing the Enter key.

where

rmm_no
is the number of the RMM where the card is to be removed

Example of a MAP display:

```
CM    MS     IOD    Net     PM    CCS    LNS     Trks     Ext    APPL
 .     .      .      .     4SysB   .      .       .        .      .

RMM                SysB     ManB     OffL     CBsy     ISTb     InSv
 0 Quit     PM       4        0        10       3        3       130
 2 Post_    RMM      0        1         1       0        0        2
 3
 4          RMM  5  INSV
 5 Trnsl
 6 Tst
 7 Bsy
 8 RTS
 9 OffL
10 LoadPM
11 Disp_
12 Next
13
14 QueryPM
15
16
17
18
```

4 Busy the RMM by typing

>BSY

and pressing the Enter key.

NT3X83
in an RSC RMM (continued)

Example of a MAP display:

```
CM    MS     IOD    Net     PM    CCS    LNS     Trks     Ext    APPL
 .     .      .      .     4SysB   .      .       .        .       .

RMM                SysB     ManB     OffL     CBsy     ISTb     InSv
 0 Quit     PM       4        0        10       3        3       130
 2 Post_    RMM      0        1         1       0        0        2
 3
 4          RMM  5  ManB
 5 Trnsl
 6 Tst
 7 Bsy
 8 RTS
 9 OffL
10 LoadPM
11 Disp_
12 Next
13
14 QueryPM
15
16
17
18
```

At the RMM shelf

5

CAUTION
Static discharge may cause damage to circuit packs
Put on a wrist strap and connect it to the frame of the RMM before removing or inserting any cards. This protects the RMM against service degradation caused by static electricity.

Put on a wrist strap.

6

DANGER
Equipment damage
Take these precautions when removing or inserting a card:

1. Do not apply direct pressure to the components.

2. Do not force the card into its slot.

Remove the NT3X83 card as shown in the following figures.

NT3X83
in an RSC RMM (continued)

a Locate the card to be removed on the appropriate shelf.

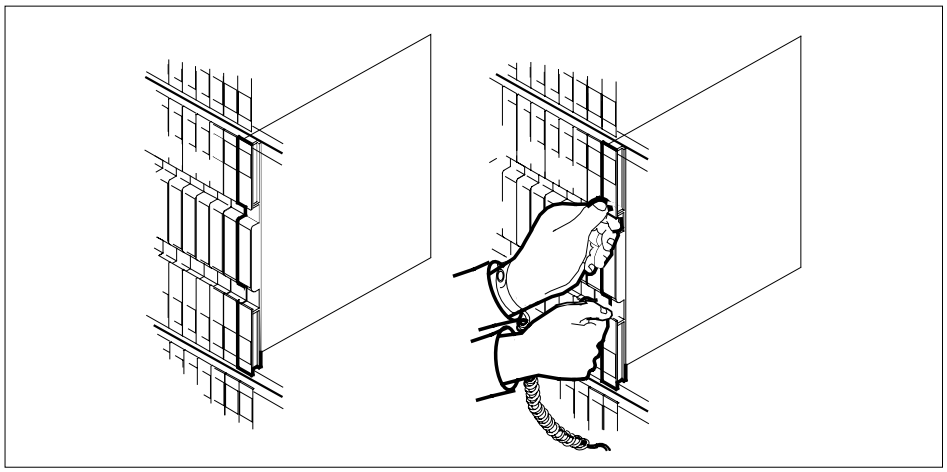

b Open the locking levers on the card to be replaced and gently pull the card towards you until it clears the shelf.

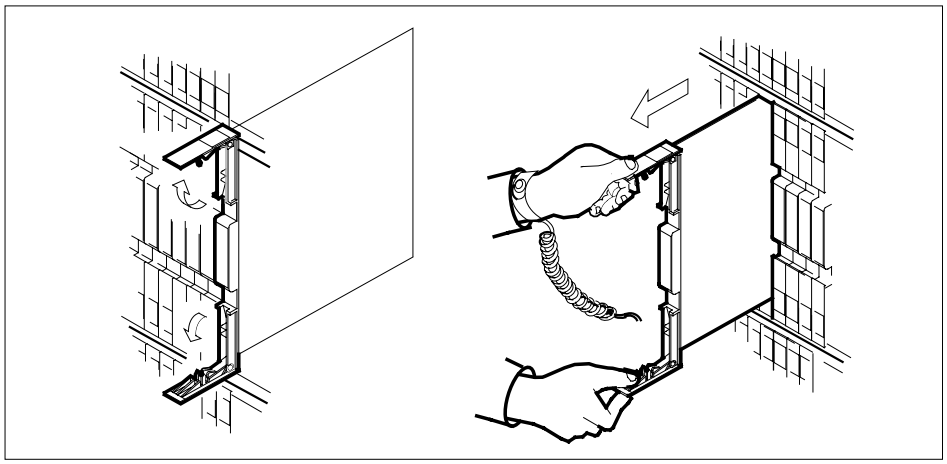

c Ensure the replacement card has the same PEC, including suffix, as the card you just removed.

7

DANGER
Equipment damage
Take these precautions when removing or inserting a card:

1. Do not apply direct pressure to the components.
2. Do not force the card into its slot.

Open the locking levers on the replacement card.

Align the card with the slots in the shelf and gently slide the card into the shelf.

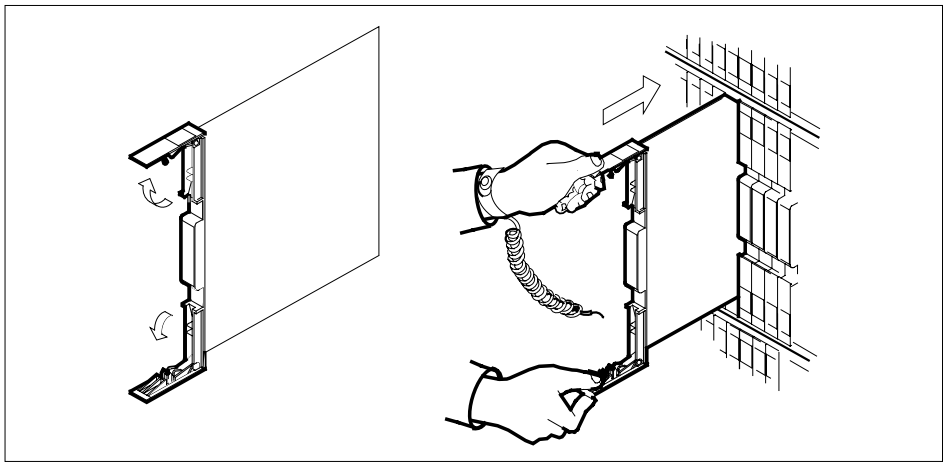

8 Seat and lock the card.

a Using your fingers or thumbs, push on the upper and lower edges of the faceplate to ensure the card is fully seated in the shelf.

b Close the locking levers.

NT3X83
in an RSC RMM (continued)

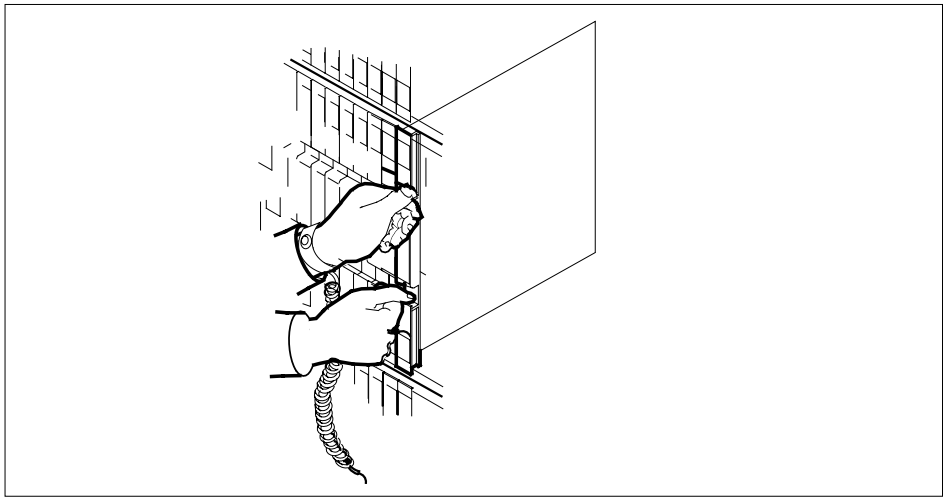

9 Use the following information to determine the next step in this procedure.

If you entered this procedure from	Do
an alarm clearing procedure	step 13
other	step 10

At the MAP display

10 Return the RMM to service by typing

>RTS

and pressing the Enter key.

If the RTS	Do
passed	step 11
failed	step 14

11 Send any faulty cards for repair according to local procedure.

12 Record the following items in office records:

- date the card was replaced
- serial number of the card
- symptoms that prompted replacement of the card

Go to step 15.

13 Return to the *Alarm Clearing Procedure* that directed you to this card replacement procedure. If necessary, go to the point where the faulty card list

NT3X83
in an RSC RMM (end)

was produced, identify the next faulty card on the list, and go to the appropriate replacement procedure in this manual for that card.

14 Obtain further assistance in replacing this card by contacting personnel responsible for higher level of support.

15 You have successfully completed this procedure. Return to the maintenance procedure that directed you to this card replacement procedure and continue as directed.

NT4X97 in an IOPAC RMM

Application

Use this procedure to replace the following card in an RMM.

PEC	Suffixes	Name
NT4X97	AA	Metallic Test Unit Controller

Common procedures

The common replacing a card procedure is referenced in this procedure.

Action

The following flowchart is only a summary of the procedure. To replace the card, use the instructions in the procedure that follows the flowchart.

NT4X97
in an IOPAC RMM (continued)

Summary of card replacement procedure for an NT4X97 card RMM

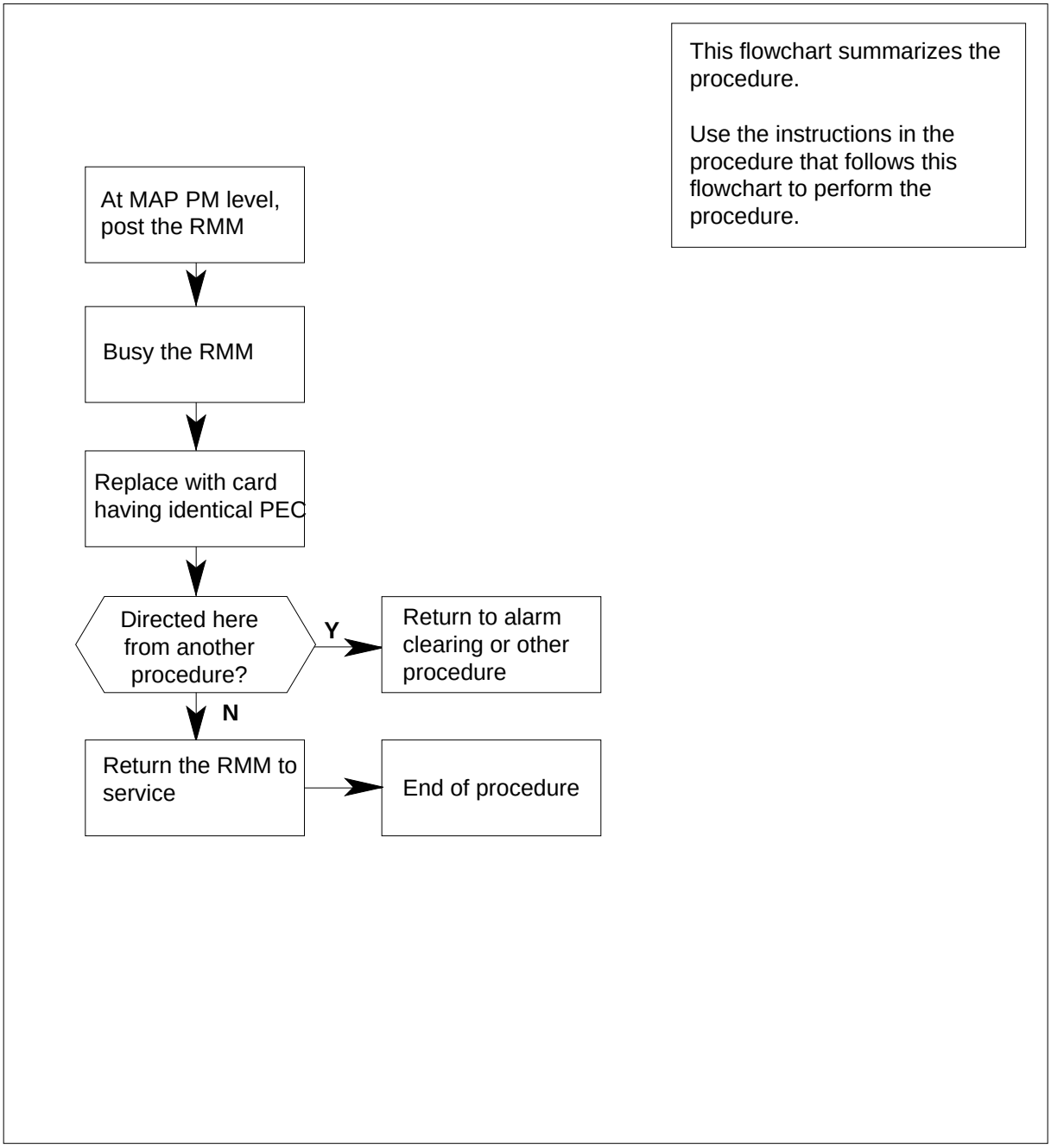

NT4X97
in an IOPAC RMM (continued)

Replacing an NT4X97 card RMM

At your current location

1 Proceed only if you have been directed to this card replacement procedure from a step in a maintenance procedure, are using the procedure for verifying or accepting cards, or have been directed to this procedure by your maintenance support group.

2 Obtain an NT4X97 replacement card. Ensure the replacement card has the same product equipment code (PEC), including suffix, as the card that is to be removed.

At the MAP terminal

3 Set the MAP display to the PM level and post the RMM by typing

>MAPCI;MTC;PM;POST RMM rmm_no

and pressing the Enter key.

where

rmm_no
is the number of the RMM where the card is to be removed

Example of MAP display:

```
 CM    MS     IOD     Net     PM     CCS     LNS   Trks    Ext  Appl
 .      .      .       .       .      .       .     .       .    .

RMM               SysB     ManB     OffL     CBsy     ISTb      InSv
 0 Quit    PM        0        0        0        0        0       130
 2 Post_   RMM       0        0        0        0        1        10
 3
 4         RMM  5  ISTb
 5 Trnsl
 6 Tst
 7 Bsy
 8 RTS
 9 OffL
10 LoadPM
11 Disp_
12 Next
13
14 QueryPM
15
16
17
18
```

4 Busy the RMM by typing

>BSY

and pressing the Enter key.

Example of a MAP display:

```
 CM      MS      IOD      Net     PM     CCS     LNS     Trks     Ext     Appl
 .       .        .        .    1ManB    .       .        .        .       .

RMM                SysB      ManB      OffL      CBsy      ISTb       InSv
 0 Quit    PM         4         1        10         0         0        130
 2 Post_   RMM        0         1         0         0         0         10
 3
 4         RMM  5  ManB
 5 Trnsl
 6 Tst
 7 Bsy
 8 RTS
 9 OffL
10 LoadPM
11 Disp_
12 Next
13
14 QueryPM
15
16
17
18
```

At the IOPAC site

5

CAUTION
Static discharge may cause damage to circuit packs
Put on a wrist strap and connect it to the frame of the RMM before removing any cards. This protects the RMM against service degradation caused by static electricity.

Replace the NT4X97 card using the common replacing a card procedure in this document. When you have completed the procedure, return here.

6 Use the following information to determine where to proceed.

If you entered this procedure from	Do
alarm clearing procedures	step 10
other	step 7

NT4X97 in an IOPAC RMM (end)

At the MAP terminal

7 Return the RMM to service by typing

>RTS

and pressing the Enter key.

If RTS	Do
passed	step 8
failed	step 11

8 Send any faulty cards for repair according to local procedure.

9 Record the date the card was replaced, the serial number of the card, and the symptoms the prompted replacement of the card. Go to step 12.

10 Return to the *Alarm Clearing Procedures* that directed you to this procedure. At the point where a faulty card list was produced, identify the next faulty card on the list and go to the appropriate card replacement procedure for that card in this manual.

11 Obtain further assistance in replacing this card by contacting operating company maintenance personnel.

12 You have successfully completed this procedure. Return to the maintenance procedure that directed you to this card replacement procedure and continue as directed.

NT4X97
in an RSC-S (PCM-30) Model A RMM

Application

Use this procedure to replace an NT4X97 card in an RSC-S RMM.

PEC	Suffixes	Name
NT4X97	AA	Line Test Unit (analog)

Common procedures

None

Action

The following flowchart is only a summary of the procedure. To replace the card, use the instructions in the procedure that follows the flowchart.

NT4X97
in an RSC-S (PCM-30) Model A RMM (continued)

Summary of card replacement procedure for an NT4X97 card in RSC-S RMM

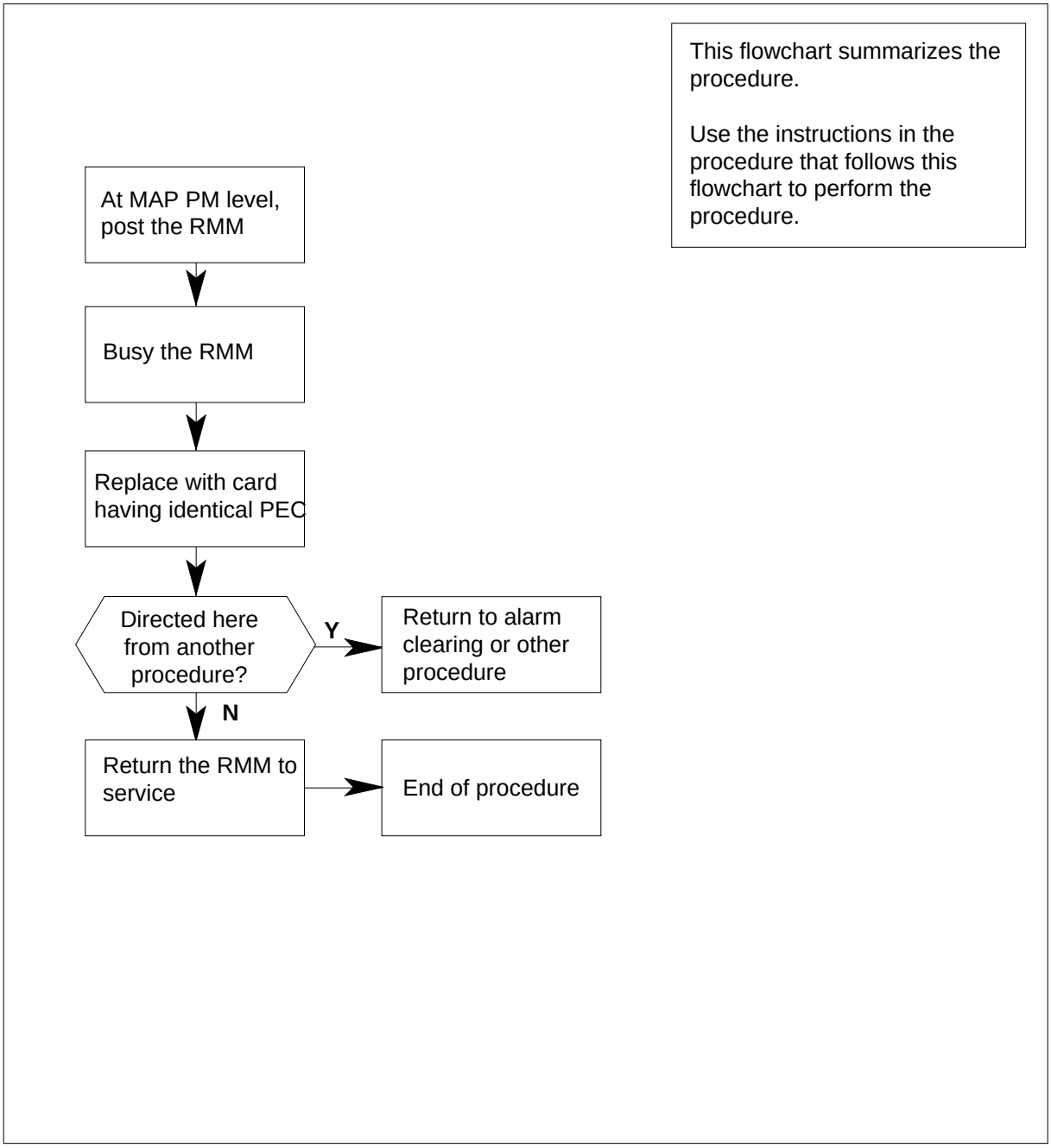

NT4X97
in an RSC-S (PCM-30) Model A RMM (continued)

Replacing an NT4X97 card in RSC-S RMM

At the MAP

1 Proceed only if you have been directed to this card replacement procedure from a step in a maintenance procedure, are using the procedure for verifying or accepting cards, or have been directed to this procedure by your maintenance support group.

2 Obtain an NT4X97 replacement card. Ensure the replacement card has the same product equipment code (PEC), including suffix, as the card that is to be removed.

At the MAP terminal

3 Set the MAP display to the PM level and post the RMM by typing

>MAPCI;MTC;PM;POST RMM rmm_no

and pressing the Enter key.

where

rmm_no
is the number of the RMM where the card is to be removed

Example of MAP display:

```
 CM    MS     IOD     Net     PM     CCS     LNS    Trks    Ext   Appl
 .      .      .       .       .      .       .      .       .      .
RMM              SysB     ManB     OffL     CBsy     ISTb      InSv
 0 Quit    PM        0        0        0        0        0       130
 2 Post_   RMM       0        0        0        0        0         0
 3
 4         RMM  5  INSV
 5 Trnsl
 6 Tst
 7 Bsy
 8 RTS
 9 OffL
10 LoadPM
11 Disp_
12 Next
13
14 QueryPM
15
16
17
18
```

4 Busy the RMM by typing

>BSY

NT4X97
in an RSC-S (PCM-30) Model A RMM (continued)

and pressing the Enter key.

Example of a MAP display:

```
 CM     MS     IOD     Net    PM    CCS    LNS    Trks    Ext    Appl
 .      .       .       .    1ManB  .      .       .       .      .
RMM              SysB     ManB     OffL     CBsy     ISTb      InSv
 0 Quit    PM       4        0       10        0        0       130
 2 Post_   RMM      0        1        0        0        0         0
 3
 4         RMM  5  ManB
 5 Trnsl
 6 Tst
 7 Bsy
 8 RTS
 9 OffL
10 LoadPM
11 Disp_
12 Next
13
14 QueryPM
15
16
17
18
```

At the RMM shelf

5

CAUTION
Static discharge may cause damage to circuit packs
Put on a wrist strap and connect it to the frame of the RMM before removing any cards. This protects the RMM against service degradation caused by static electricity.

Put on a wrist strap.

6 Remove the NT4X97 card as shown in the following figures.

a Locate the card to be removed on the appropriate shelf.

NT4X97
in an RSC-S (PCM-30) Model A RMM (continued)

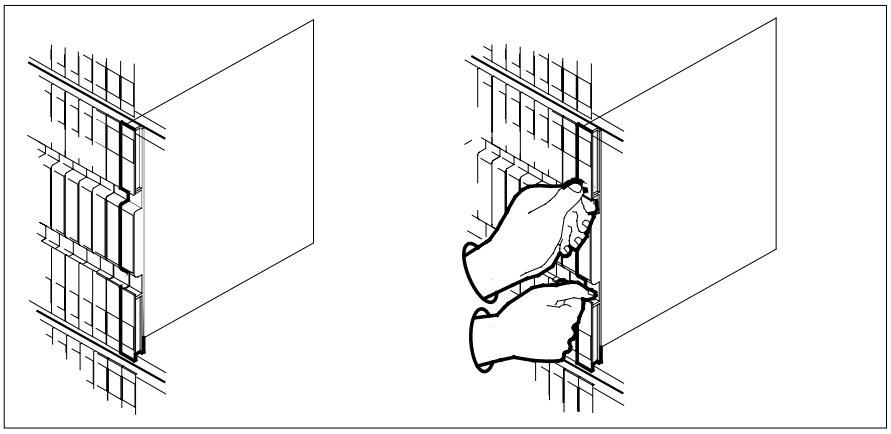

b Open the locking levers on the card to be replaced and gently pull the card toward you until it clears the shelf.

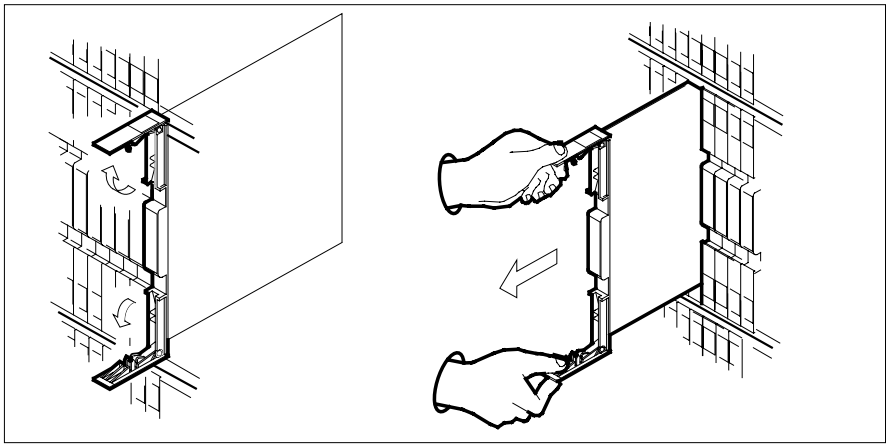

c Ensure the replacement card has the same PEC, including suffix, as the card you just removed.

7 Open the locking levers on the replacement card.

a Align the card with the slots in the shelf.

b Gently slide the card into the shelf.

NT4X97
in an RSC-S (PCM-30) Model A RMM (continued)

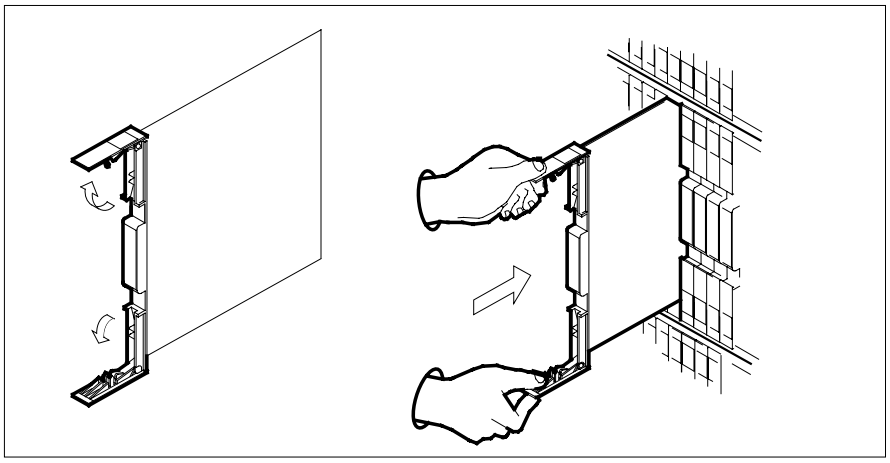

8

DANGER
Equipment damage
Take these precautions when removing or inserting a card:

1. Do not apply direct pressure to the components.
2. Do not force the card into its slot.

Seat and lock the card.

a Using your fingers or thumbs, push on the upper and lower edges of the faceplate to ensure the card is fully seated in the shelf.

b Close the locking levers.

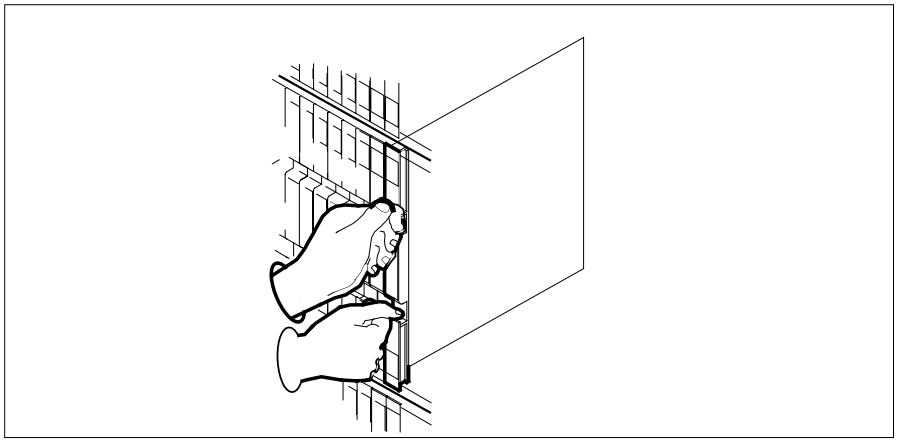

NT4X97
in an RSC-S (PCM-30) Model A RMM (end)

9 Use the following information to determine where to proceed.

If you entered this procedure from	Do
alarm clearing procedures	step 14
other	step 10

At the MAP terminal

10 Test the RMM by typing

>TST

and pressing the Enter key.

If TST	Do
passed	step 11
failed	step 14

11 Return the RMM to service by typing

>RTS

and pressing the Enter key.

If RTS	Do
passed	step 12
failed	step 15

12 Send any faulty cards for repair according to local procedure.

13 Record the date the card was replaced, the serial number of the card, and the symptoms the prompted replacement of the card. Go to step 16.

14 Return to the *Alarm Clearing Procedures* that directed you to this procedure. At the point where a faulty card list was produced, identify the next faulty card on the list and go to the appropriate card replacement procedure for that card in this manual.

15 Obtain further assistance in replacing this card by contacting operating company maintenance personnel.

16 You have successfully completed this procedure. Return to the maintenance procedure that directed you to this card replacement procedure and continue as directed.

NT4X97
in an RSC-S (PCM-30) Model B RMM

Application

Use this procedure to replace an NT4X97 card in an RSC-S RMM.

PEC	Suffixes	Name
NT4X97	AA	Line Test Unit (analog)

Common procedures

None

Action

The following flowchart is only a summary of the procedure. To replace the card, use the instructions in the procedure that follows the flowchart.

NT4X97
in an RSC-S (PCM-30) Model B RMM (continued)

Summary of card replacement procedure for an NT4X97 card in RSC-S RMM

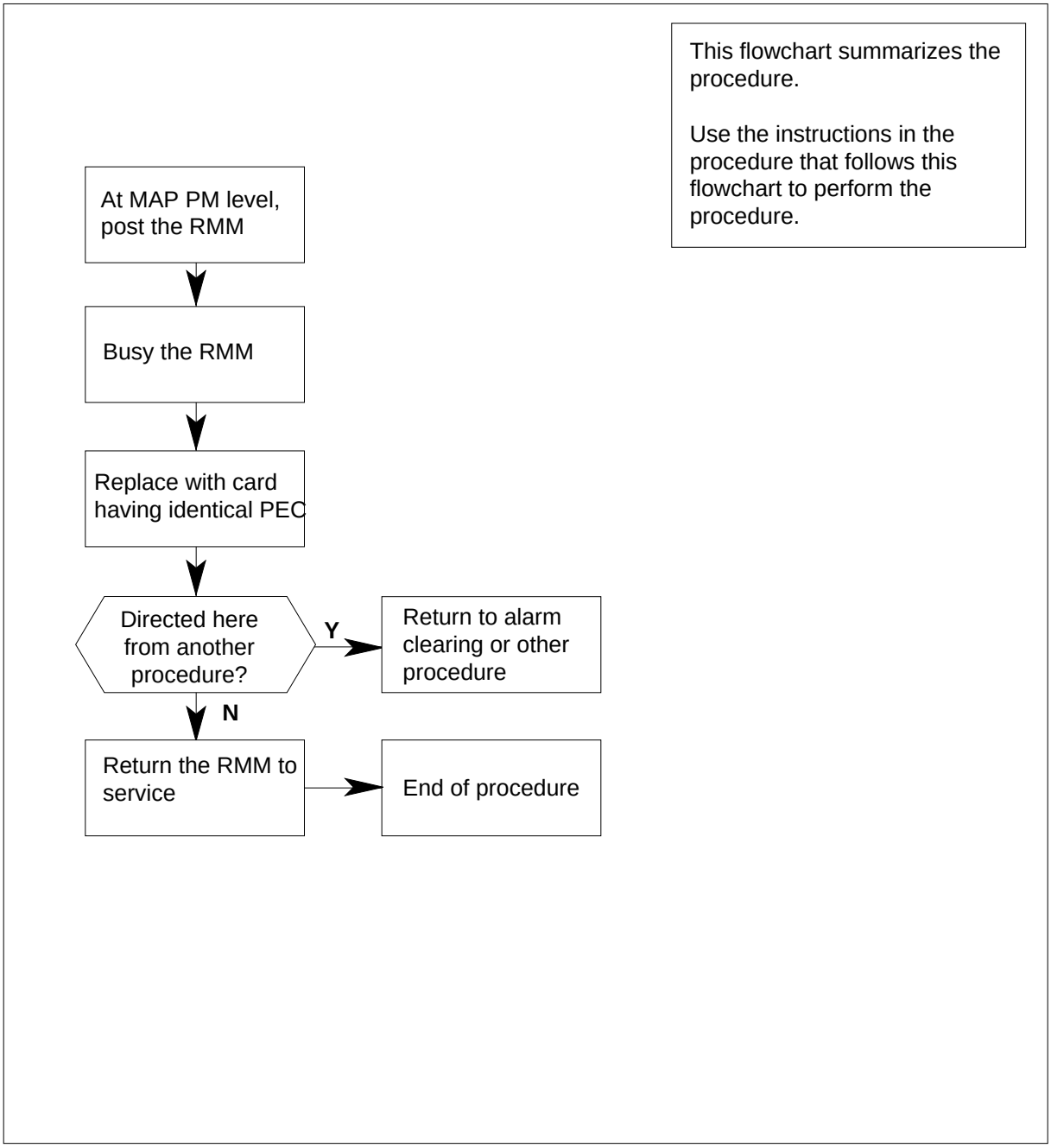

NT4X97
in an RSC-S (PCM-30) Model B RMM (continued)

Replacing an NT4X97 card in RSC-S RMM

At the MAP

1 Proceed only if you have been directed to this card replacement procedure from a step in a maintenance procedure, are using the procedure for verifying or accepting cards, or have been directed to this procedure by your maintenance support group.

2 Obtain an NT4X97 replacement card. Ensure the replacement card has the same product equipment code (PEC), including suffix, as the card that is to be removed.

At the MAP terminal

3 Set the MAP display to the PM level and post the RMM by typing

>MAPCI;MTC;PM;POST RMM rmm_no

and pressing the Enter key.

where

rmm_no
is the number of the RMM where the card is to be removed

Example of MAP display:

```
 CM    MS     IOD     Net     PM     CCS     LNS    Trks    Ext   Appl
 .      .      .       .       .      .       .      .       .      .
RMM              SysB     ManB     OffL     CBsy     ISTb      InSv
 0 Quit    PM        0        0        0        0        0       130
 2 Post_   RMM       0        0        0        0        0         0
 3
 4         RMM  5  INSV
 5 Trnsl
 6 Tst
 7 Bsy
 8 RTS
 9 OffL
10 LoadPM
11 Disp_
12 Next
13
14 QueryPM
15
16
17
18
```

4 Busy the RMM by typing

>BSY

and pressing the Enter key.

Example of a MAP display:

```
 CM     MS     IOD     Net    PM    CCS    LNS    Trks    Ext    Appl
 .      .       .       .    1ManB  .      .       .       .      .
RMM              SysB     ManB     OffL     CBsy     ISTb      InSv
 0 Quit    PM       4        0       10        0        0       130
 2 Post_   RMM      0        1        0        0        0         0
 3
 4         RMM  5  ManB
 5 Trnsl
 6 Tst
 7 Bsy
 8 RTS
 9 OffL
10 LoadPM
11 Disp_
12 Next
13
14 QueryPM
15
16
17
18
```

At the RMM shelf

5

CAUTION
Static discharge may cause damage to circuit packs
Put on a wrist strap and connect it to the frame of the RMM before removing any cards. This protects the RMM against service degradation caused by static electricity.

Put on a wrist strap.

6 Remove the NT4X97 card as shown in the following figures.

a Locate the card to be removed on the appropriate shelf.

NT4X97
in an RSC-S (PCM-30) Model B RMM (continued)

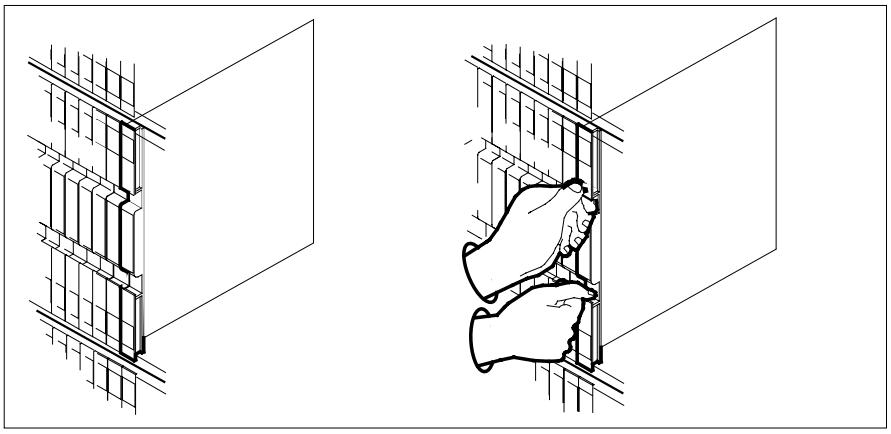

b Open the locking levers on the card to be replaced and gently pull the card toward you until it clears the shelf.

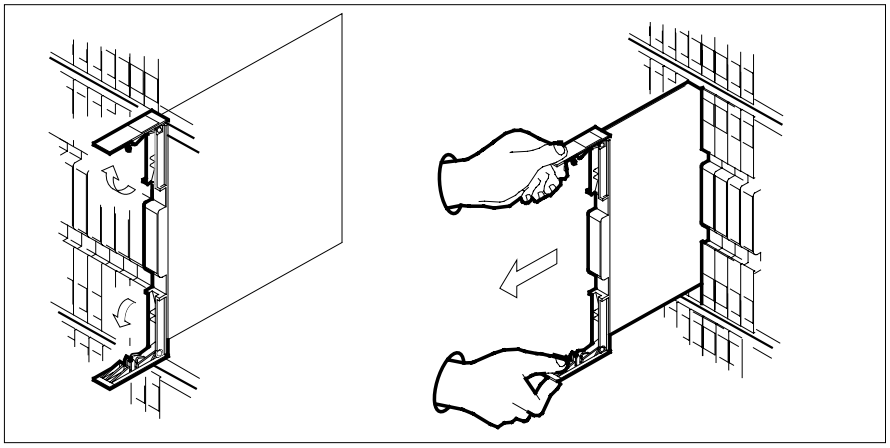

c Ensure the replacement card has the same PEC, including suffix, as the card you just removed.

7 Open the locking levers on the replacement card.

a Align the card with the slots in the shelf.

b Gently slide the card into the shelf.

NT4X97
in an RSC-S (PCM-30) Model B RMM (continued)

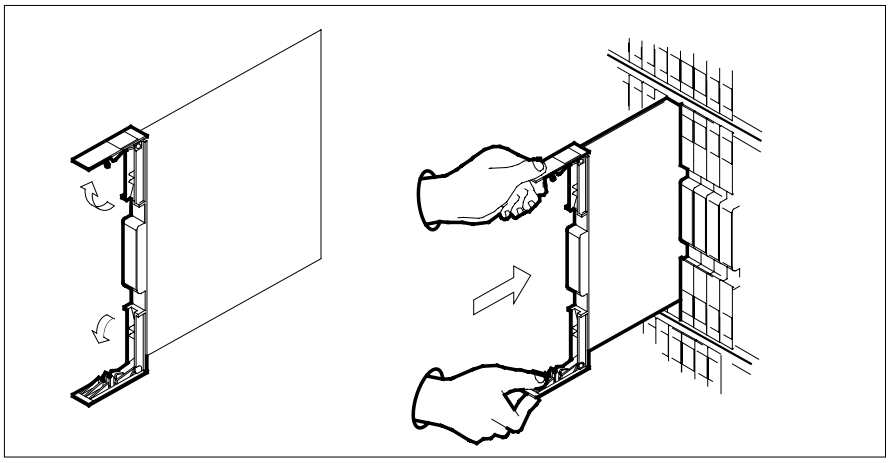

8

DANGER
Equipment damage
Take these precautions when removing or inserting a card:

1. Do not apply direct pressure to the components.
2. Do not force the card into its slot.

Seat and lock the card.

a Using your fingers or thumbs, push on the upper and lower edges of the faceplate to ensure the card is fully seated in the shelf.

b Close the locking levers.

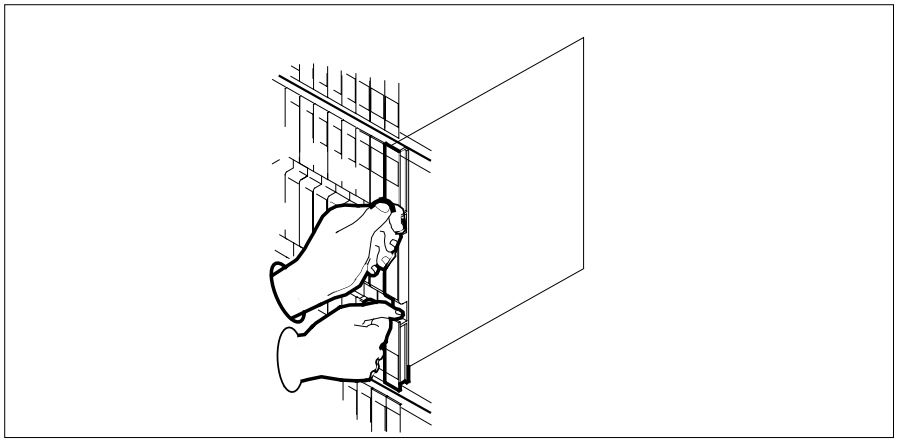

NT4X97 in an RSC-S (PCM-30) Model B RMM (end)

9 Use the following information to determine where to proceed.

If you entered this procedure from	Do
alarm clearing procedures	step 14
other	step 10

At the MAP terminal

10 Test the RMM by typing

>TST

and pressing the Enter key.

If TST	Do
passed	step 11
failed	step 14

11 Return the RMM to service by typing

>RTS

and pressing the Enter key.

If RTS	Do
passed	step 12
failed	step 15

12 Send any faulty cards for repair according to local procedure.

13 Record the date the card was replaced, the serial number of the card, and the symptoms the prompted replacement of the card. Go to step 16.

14 Return to the *Alarm Clearing Procedures* that directed you to this procedure. At the point where a faulty card list was produced, identify the next faulty card on the list and go to the appropriate card replacement procedure for that card in this manual.

15 Obtain further assistance in replacing this card by contacting operating company maintenance personnel.

16 You have successfully completed this procedure. Return to the maintenance procedure that directed you to this card replacement procedure and continue as directed.

NT4X98 in an IOPAC RMM

Application

Use this procedure to replace the following card in an RMM.

PEC	Suffixes	Name
NT4X98	BB	Metallic Test Unit (MTU) analog

Common procedures

The common replacing a card procedure is referenced in this procedure.

Action

The following flowchart is only a summary of the procedure. To replace the card, use the instructions in the procedure that follows the flowchart.

NT4X98
in an IOPAC RMM (continued)

Summary of card replacement procedure for an NT4X98 card RMM

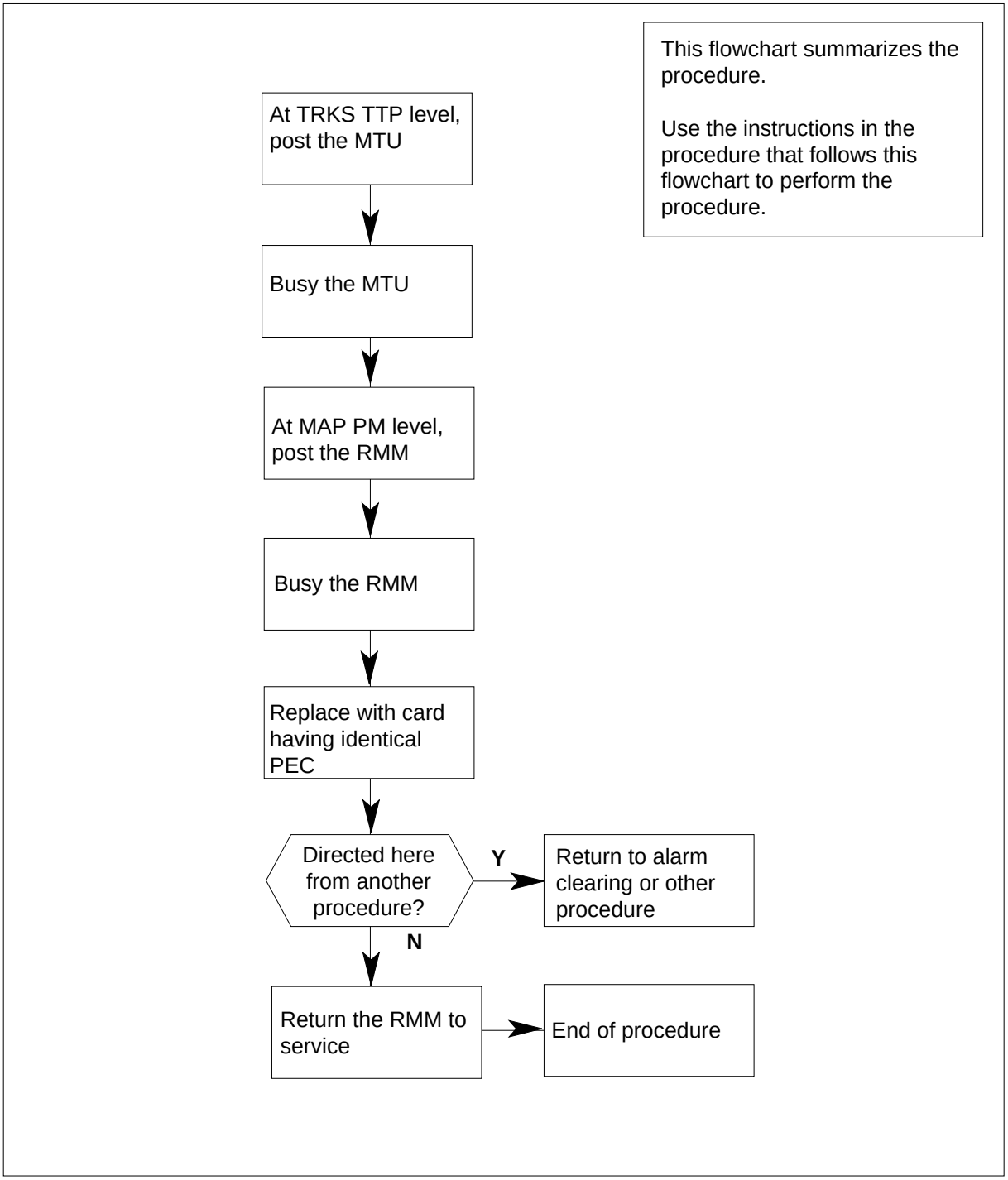

Replacing an NT4X98 card RMM

At your current location

1 Proceed only if you have been directed to this card replacement procedure from a step in a maintenance procedure, are using the procedure for verifying or accepting cards, or have been directed to this procedure by your maintenance support group.

2 Obtain an NT4X98 replacement card. Ensure the replacement card has the same product equipment code (PEC), including suffix, as the card that is to be removed.

At the MAP terminal

3 Set the MAP display to PM level and post the RMM by typing

`>MAPCI;MTC;TRKS;TTP;POST P RMM rmm_no ckt_no`

where

rmm_no
is the number of the RMM with the faulty MTU card

ckt_no
is the number of the faulty MTU card

and pressing the Enter key.

Example of a MAP display:

```
 CM     MS     IOD     Net     PM    CCS    LNS    Trks    Ext   Appl
  .      .       .      .       .      .      .      .       .      .

TTP
 0 Quit       POST    1            DELQ         BUSYQ          DIG
 2 Post_      TTP    6-009
 3 Seize_     CKT TYPE    PM NO.  COM LANG     STA  S  R  DOT TE RESULT
 4            MISC   RMM  0  16   MTU  0       LO
 5 Bsy_
 6 RTS_
 7 Tst_
 8
 9 CktInfo
10 CktLoc
11 Hold       TTP ID IS:   6-009
12 Next_      TTP:
13 Rls_       LAST CKTN  =  1
14 Ckt_       SHORT CLLI IS:  MTU
15 Trnslvf_   OK, CKT POSTED
16 Stksdr_
17 Pads_
18 Level_
```

NT4X98
in an IOPAC RMM (continued)

4 Busy the MTU by typing

>BSY; BSY INB

and pressing the Enter key.

Example of a MAP display:

```
 CM     MS     IOD     Net     PM    CCS    LNS    Trks   Ext    Appl
 .      .       .       .       .     .      .      .      .      .

TTP
 0 Quit       POST    1            DELQ         BUSYQ          DIG
 2 Post_      TTP    6-009
 3 Seize_     CKT TYPE    PM NO. COM LANG     STA  S  R  DOT TE RESULT
 4            MISC   RMM  0  16  MTU  0       INB
 5 Bsy_
 6 RTS_
 7 Tst_
 8
 9 CktInfo
10 CktLoc
11 Hold       TTP ID IS:   6-009
12 Next_      TTP:
13 Rls_       LAST CKTN  =  1
14 Ckt_       SHORT CLLI IS:  MTU
15 Trnslvf_   OK, CKT POSTED
16 Stksdr_
17 Pads_
18 Level_
```

5 Set the MAP display to the PM level and post the RMM by typing

>PM;POST RMM rmm_no

and pressing the Enter key.

where

rmm_no
is the number of the RMM where the card is to be removed

Example of a MAP display:

```
 CM    MS     IOD     Net     PM     CCS     LNS   Trks    Ext  Appl
 .      .      .       .       .      .       .     .       .    .

RMM               SysB     ManB     OffL     CBsy     ISTb      InSv
 0 Quit    PM        0        0        0        0        0       130
 2 Post_   RMM       0        0        0        0        1        10
 3
 4         RMM  5  ISTb
 5 Trnsl
 6 Tst
 7 Bsy
 8 RTS
 9 OffL
10 LoadPM
11 Disp_
12 Next
13
14 QueryPM
15
16
17
18
```

6 Busy the RMM by typing

>BSY

and pressing the Enter key.

Example of a MAP display:

```
 CM     MS     IOD     Net    PM    CCS    LNS    Trks    Ext    Appl
 .      .       .       .    1ManB   .      .       .       .      .

RMM               SysB     ManB     OffL     CBsy     ISTb      InSv
 0 Quit    PM        0        1       10        0        0       130
 2 Post_   RMM       0        1        0        0        0        10
 3
 4         RMM  5  ManB
 5 Trnsl
 6 Tst
 7 Bsy
 8 RTS
 9 OffL
10 LoadPM
11 Disp_
12 Next
13
14 QueryPM
15
16
17
18
```

NT4X98 in an IOPAC RMM (continued)

At the IOPAC site

7

CAUTION
Static discharge may cause damage to circuit packs
Put on a wrist strap and connect it to the frame of the RMM before removing any cards. This protects the RMM against service degradation caused by static electricity.

Replace the NT4X98 card using the common replacing a card procedure in this document. When you have completed the procedure, return here.

8 Use the following information to determine where to proceed.

If you entered this procedure from	Do
alarm clearing procedures	step 14
other	step 9

At the MAP terminal

9 Return the RMM to service by typing

>RTS

and pressing the Enter key.

If RTS	Do
passed	step 10
failed	step 15

10 Post the MTU by typing

>TRKS;TTP;POST P RMM rmm_no ckt_no

where

rmm_no
is the number of the RMM with the new MTU card

ckt_no
is the number of the new MTU card

and pressing the Enter key.

11 Return the MTU to service by typing

>BSY ALL;RTS ALL

and pressing the Enter key.

NT4X98
in an IOPAC RMM (end)

12 Send any faulty cards for repair according to local procedure.

13 Record the date the card was replaced, the serial number of the card, and the symptoms that prompted replacement of the card. Go to step 16.

14 Return to the *Alarm Clearing Procedures* that directed you to this procedure. At the point where a faulty card list was produced, identify the next faulty card on the list, and go to the appropriate card replacement procedure for that card in this manual.

15 Obtain further assistance in replacing this card by contacting operating company maintenance personnel.

16 You have successfully completed this procedure. Return to the maintenance procedure that directed you to this card replacement procedure and continue as directed.

NT4X98 in an RSC-S (PCM-30) Model B RMM

Application

Use this procedure to replace an NT4X98 card in an RSC-S RMM.

PEC	Suffixes	Name
NT4X98	AA	Line Test Unit (digital)

Common procedures

None

Action

The following flowchart is only a summary of the procedure. To replace the card, use the instructions in the procedure that follows the flowchart.

NT4X98
in an RSC-S (PCM-30) Model B RMM (continued)

Summary of card replacement procedure for an NT4X98 card in RSC-S RMM

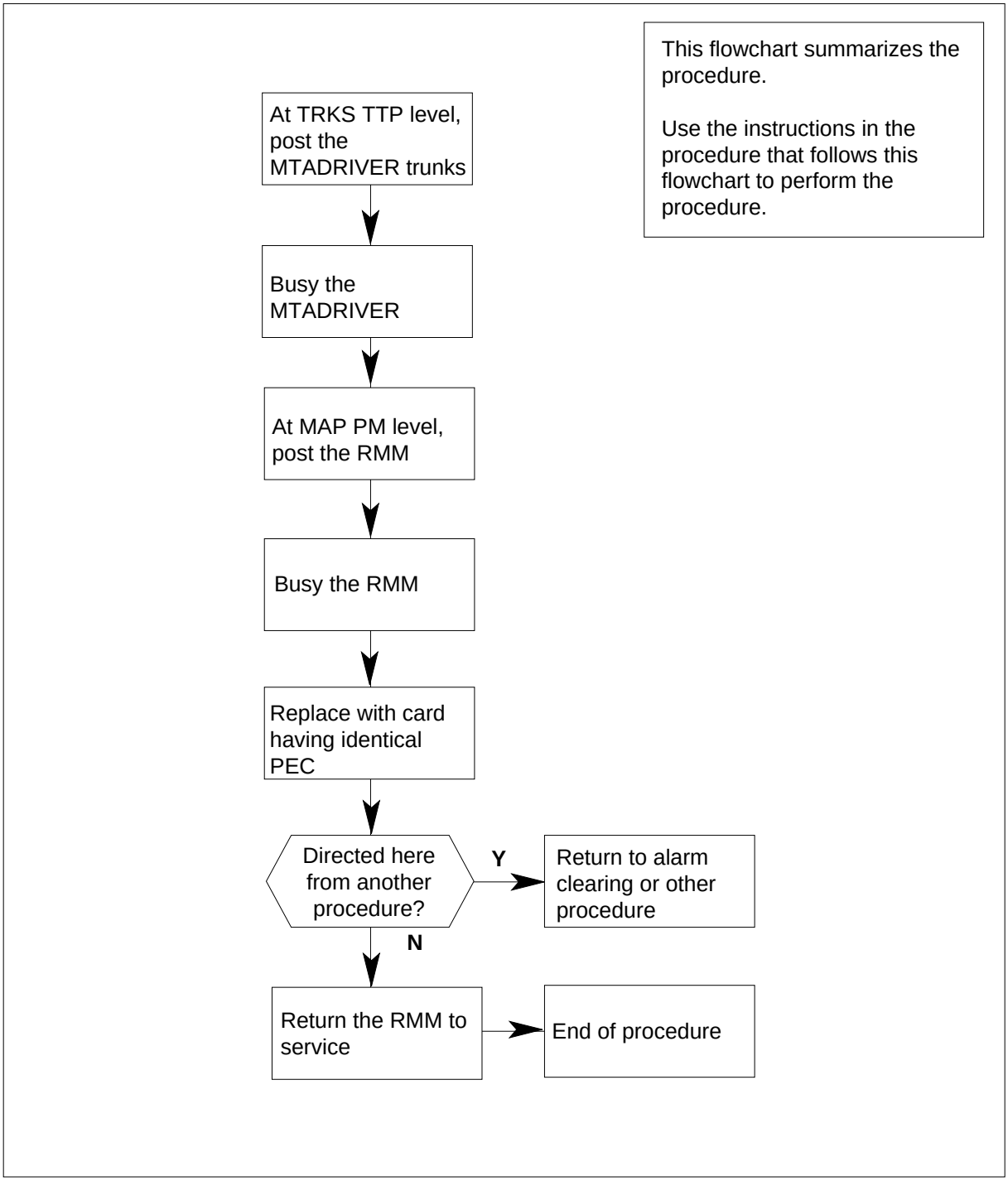

NT4X98
in an RSC-S (PCM-30) Model B RMM (continued)

Replacing an NT4X98 card in RSC-S RMM

1 Proceed only if you have been directed to this card replacement procedure from a step in a maintenance procedure, are using the procedure for verifying or accepting cards, or have been directed to this procedure by your maintenance support group.

2 Obtain an NT4X98 replacement card. Ensure the replacement card has the same product equipment code (PEC), including suffix, as the card that is to be removed.

At the MAP terminal

3 Set the MAP display to TTP level and post the RMM by typing

`>MAPCI;MTC;TRKS;TTP;POST P RMM rmm_no ckt_no`

where

rmm_no
is the number of the RMM with the faulty MTADRIVER card

ckt_no
is the number of the faulty MTADRIVER card

and pressing the Enter key.

Example of a MAP display:

```
 CM     MS     IOD     Net     PM    CCS    LNS    Trks    Ext   Appl
  .      .       .      .       .      .      .      .      .      .
TTP
 0 Quit       POST    1            DELQ         BUSYQ          DIG
 2 Post_      TTP    6-009
 3 Seize_     CKT TYPE    PM NO.  COM LANG     STA  S  R  DOT TE RESULT
 4            MISC   RMM  0  16   MATDRIVER  3 IDL
 5 Bsy_
 6 RTS_
 7 Tst_
 8
 9 CktInfo
10 CktLoc
11 Hold       TTP ID IS:   6-009
12 Next_      TTP:
13 Rls_       LAST CKTN  =  1
14 Ckt_       SHORT CLLI IS:  MTADRI
15 Trnslvf_   OK, CKT POSTED
16 Stksdr_
17 Pads_
18 Level_
```

NT4X98
in an RSC-S (PCM-30) Model B RMM (continued)

4 Busy the MTADRIVER by typing

>BSY; BSY INB

and pressing the Enter key.

Example of a MAP display:

```
 CM     MS     IOD     Net     PM    CCS    LNS    Trks   Ext    Appl
 .      .       .       .       .      .      .      .      .      .
TTP
 0 Quit       POST    1            DELQ         BUSYQ          DIG
 2 Post_      TTP    6-009
 3 Seize_     CKT TYPE    PM NO. COM LANG     STA  S  R  DOT TE RESULT
 4            MISC   RMM  0  16  MATDRIVER  3 IDL
 5 Bsy_
 6 RTS_
 7 Tst_
 8
 9 CktInfo
10 CktLoc
11 Hold       TTP ID IS:   6-009
12 Next_      TTP:
13 Rls_       LAST CKTN  =  1
14 Ckt_       SHORT CLLI IS:  MTADRI
15 Trnslvf_   OK, CKT POSTED
16 Stksdr_
17 Pads_
18 Level_
```

5 Set the MAP display to the PM level and post the RMM by typing

>PM;POST RMM rmm_no

and pressing the Enter key.

where

rmm_no
is the number of the RMM where the card is to be removed

Example of a MAP display:

NT4X98
in an RSC-S (PCM-30) Model B RMM (continued)

```
 CM     MS     IOD     Net     PM    CCS    LNS    Trks    Ext   Appl
  .      .      .       .      .      .      .      .       .     .
RMM              SysB     ManB     OffL     CBsy     ISTb      InSv
 0 Quit    PM       0        0        0        0        0       130
 2 Post_   RMM      0        0        0        0        0         0
 3
 4         RMM  5  INSV
 5 Trnsl
 6 Tst
 7 Bsy
 8 RTS
 9 OffL
10 LoadPM
11 Disp_
12 Next
13
14 QueryPM
15
16
17
18
```

6 Busy the RMM by typing

>BSY

and pressing the Enter key.

Example of a MAP display:

```
 CM     MS     IOD     Net     PM    CCS    LNS    Trks   Ext   Appl
 .      .      .       .     1ManB    .      .      .     .     .
RMM              SysB     ManB     OffL     CBsy     ISTb      InSv
 0 Quit    PM       4        0       10        0        0       130
 2 Post_   RMM      0        1        0        0        0         0
 3
 4         RMM  5  ManB
 5 Trnsl
 6 Tst
 7 Bsy
 8 RTS
 9 OffL
10 LoadPM
11 Disp_
12 Next
13
14 QueryPM
15
16
17
18
```

NT4X98
in an RSC-S (PCM-30) Model B RMM (continued)

At the RMM shelf

7

CAUTION
Static discharge may cause damage to circuit packs
Put on a wrist strap and connect it to the frame of the RMM before removing any cards. This protects the RMM against service degradation caused by static electricity.

Put on a wrist strap.

8 Remove the NT4X98 card as shown in the following figures.

a Locate the card to be removed on the appropriate shelf.

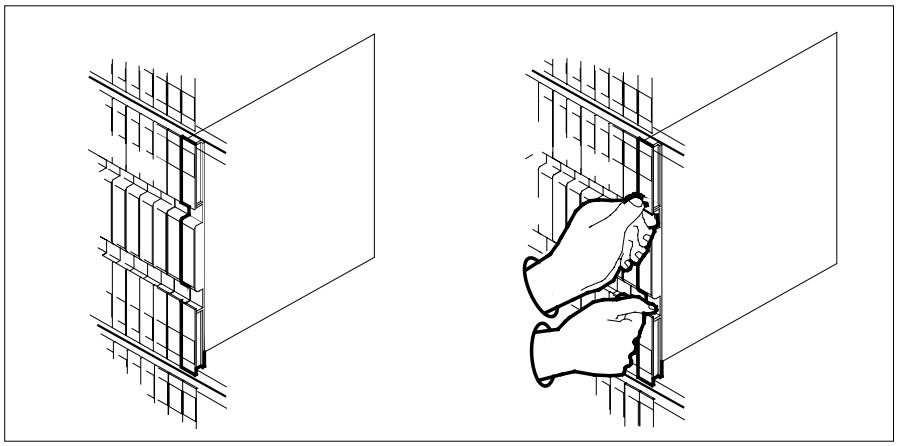

b Open the locking levers on the card to be replaced and gently pull the card toward you until it clears the shelf.

NT4X98
in an RSC-S (PCM-30) Model B RMM (continued)

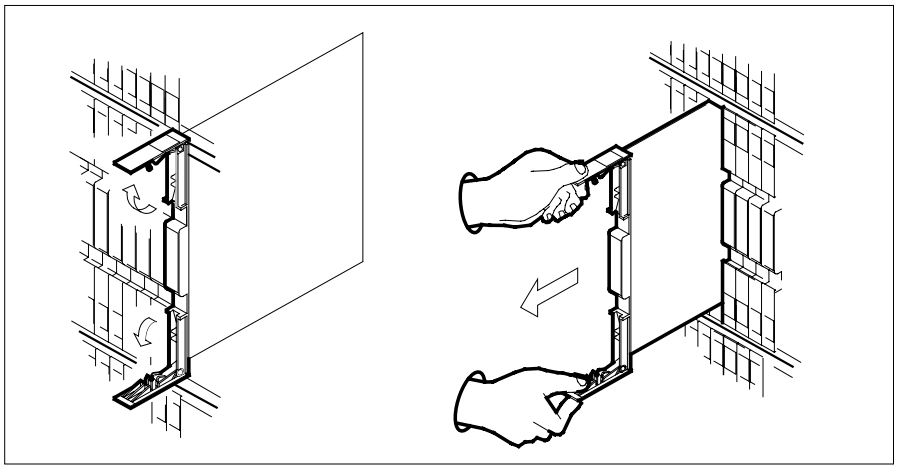

c Ensure the replacement card has the same PEC, including suffix, as the card you just removed.

9 Open the locking levers on the replacement card.

a Align the card with the slots in the shelf.

b Gently slide the card into the shelf.

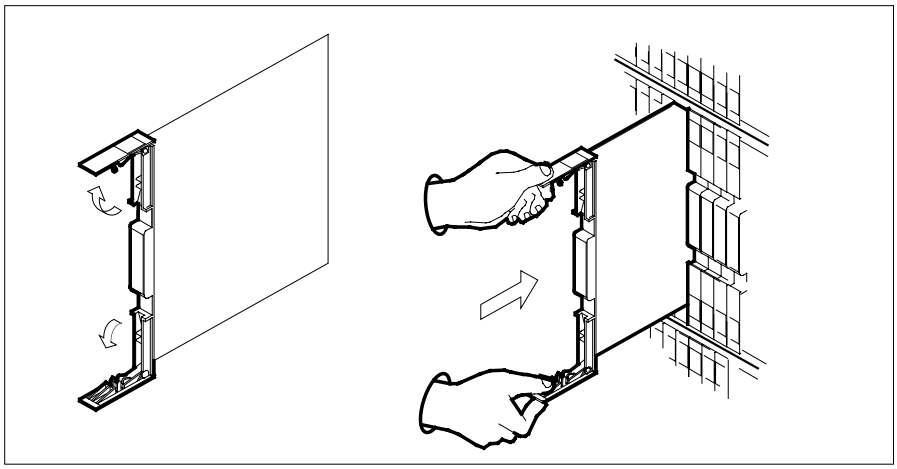

NT4X98
in an RSC-S (PCM-30) Model B RMM (continued)

10

DANGER
Equipment damage
Take these precautions when removing or inserting a card:

1. Do not apply direct pressure to the components.
2. Do not force the card into the slot.

Seat and lock the card.

a Using your fingers or thumbs, push on the upper and lower edges of the faceplate to ensure the card is fully seated in the shelf.

b Close the locking levers.

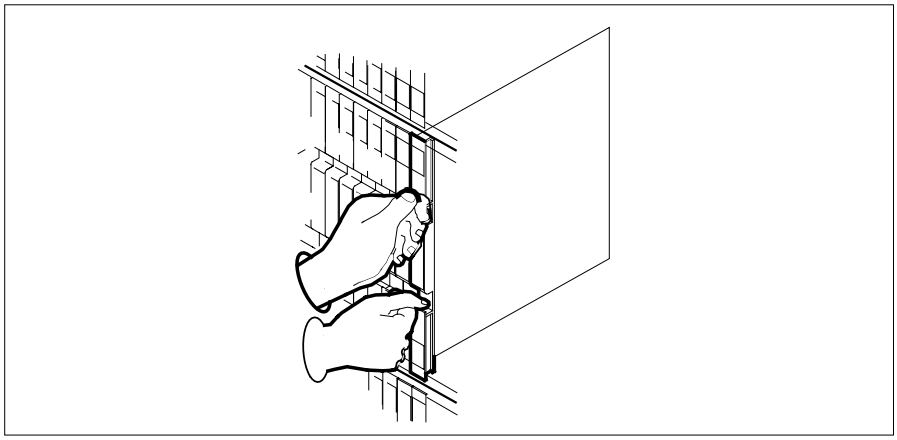

11 Use the following information to determine where to proceed.

If you entered this procedure from	Do
alarm clearing procedures	step 18
other	step 12

NT4X98 in an RSC-S (PCM-30) Model B RMM (end)

At the MAP terminal

12 Test the RMM by typing

>TST

and pressing the Enter key.

If TST	Do
passed	step 13
failed	step 18

13 Return the RMM to service by typing

>RTS

and pressing the Enter key.

If RTS	Do
passed	step 14
failed	step 19

14 Post the MTADRIVER by typing

>TRKS;TTP;POST P RMM rmm_no ckt_no

where

rmm_no
is the number of the RMM with the new MTADRIVER card

ckt_no
is the number of the new MTADRIVER card

and pressing the Enter key.

15 Return the MTADRIVER to service by typing

>BSY ALL;RTS ALL

and pressing the Enter key.

16 Send any faulty cards for repair according to local procedure.

17 Record the date the card was replaced, the serial number of the card, and the symptoms that prompted replacement of the card. Go to step 20.

18 Return to the *Alarm Clearing Procedures* that directed you to this procedure. At the point where a faulty card list was produced, identify the next faulty card on the list, and go to the appropriate card replacement procedure for that card in this manual.

19 Obtain further assistance in replacing this card by contacting operating company maintenance personnel.

20 You have successfully completed this procedure. Return to the maintenance procedure that directed you to this card replacement procedure and continue as directed.

NT6X17 in an IOPAC ILCM

Application

Use this procedure to replace the following card in an International line concentrating module (ILCM).

PEC	Suffixes	Name
NT6X17	AA, AB, AC	Type A line card
NT6X17	BA	World line card

Common procedures

The common replacing a line card procedure is referenced in this procedure.

Action

The following flowchart is only a summary of the procedure. To replace the card, use the instructions in the step-action procedure that follows the flowchart.

NT6X17
in an IOPAC ILCM (continued)

Summary of card replacement procedure for an NT6X17 card in an ILCM

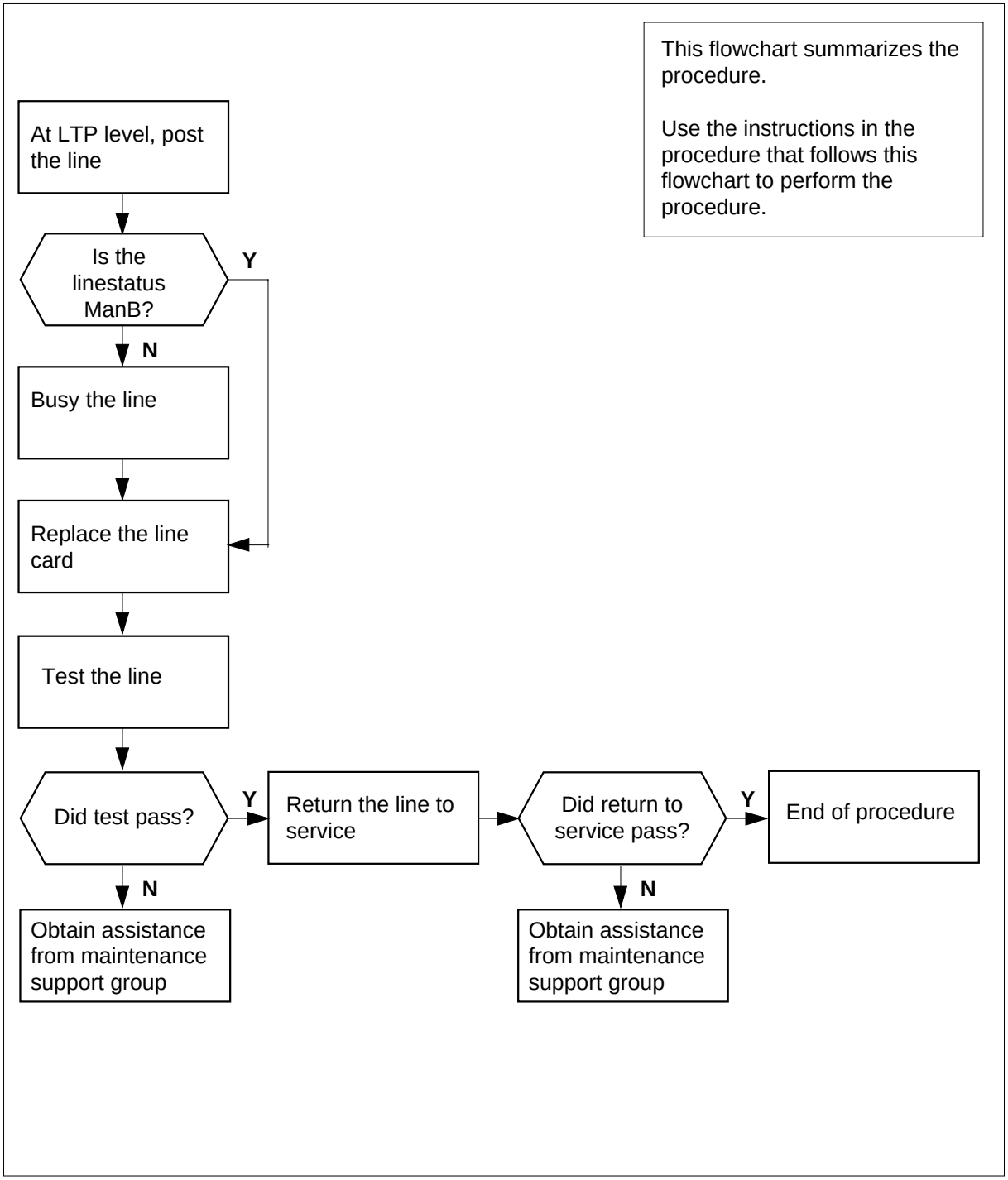

NT6X17 in an IOPAC ILCM (continued)

Replacing an NT6X17 in an ILCM

At the MAP terminal

1 Obtain a replacement card. Ensure the replacement card has the same product equipment code (PEC), including suffix, as the card to be removed.

2 Access the line test position (LTP) level of the MAP display and post the line associated with the card to be replaced by typing

`>MAPCI;MTC;LNS;LTP;POST L site lcm lsg ckt`

and pressing the Enter key.

where

site
is the name of the site where the IOPAC is located

lcm
is the number of the ILCM with the faulty card

lsg
is the number of the line subgroup with the faulty card

ckt
is the number of the circuit associated with the faulty card

Example of a MAP response:

```
LCC PTY RNG .....LEN.........  DN   STA F S LTA TE RESULT
1FR      REM1 00 0 03 03     7213355
```

3 Check the status of the posted line.

If the line status is	Do
manual busy (ManB)	step 5
not ManB	step 4

4 Busy the line by typing

`>BSY`

and pressing the Enter key.

At the IOPAC cabinet

5 Go to the common replacing a line card procedure in this document. When you have completed the procedure, return to this step.

NT6X17 in an IOPAC ILCM (end)

At the MAP terminal

6 Test the line card just replaced by typing

>DIAG

and pressing the Enter key.

If the DIAG	Do
passed	step 7
failed	step 10

7 Return the line card to service by typing

>RTS

and pressing the Enter key.

If RTS	Do
passed	step 8
failed	step 10

8 Send any faulty cards for repair according to local procedure.

9 Record the following items in office records:

- date the card was replaced
- serial number of the card
- symptoms that prompted replacement of the card

Go to step 11.

10 Obtain further assistance in replacing this card by contacting the personnel responsible for higher level of support.

11 You have successfully completed this procedure.

NT6X17 in an OPM

Application

Use this procedure to replace the following card in an OPM.

PEC	Suffixes	Name
NT6X17	AA, AB, AC	Standard Line Circuit Type A (POTS)

Common procedures

The common replacing a line card procedure is referenced in this procedure.

Action

The following flowchart is a summary of the procedure. To replace the card, use the instructions in the procedure that follows the flowchart.

NT6X17
in an OPM (continued)

Summary of replacing an NT6X17 card in an OPM

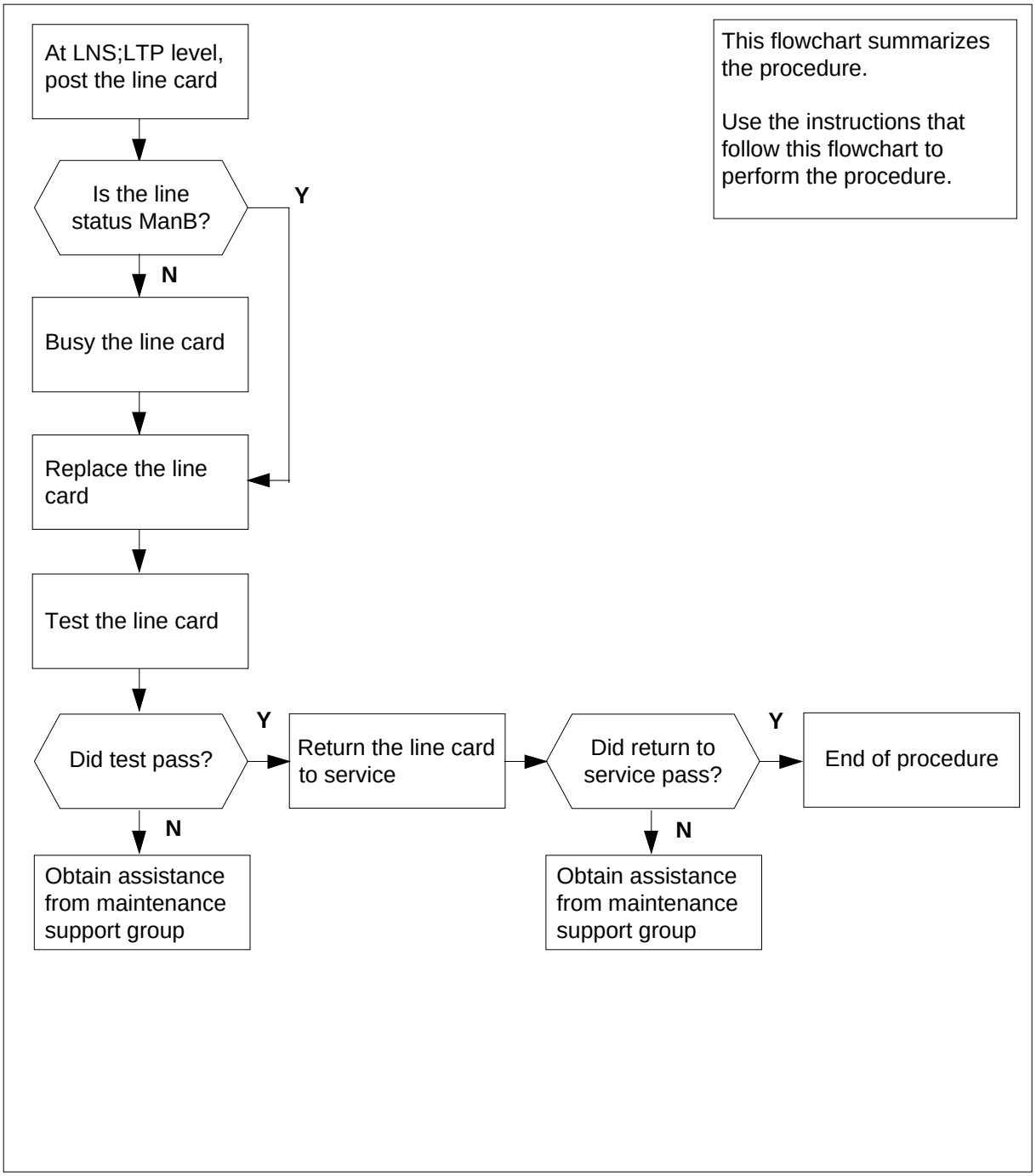

Replacing an NT6X17 card in an OPM

At your current location

1 Obtain a replacement card. Ensure that the replacement card has the same product equipment code (PEC), including suffix, as the card that is to be removed.

At the MAP terminal

2 Access the LTP level of the MAP terminal and post the line associated with the card to be replaced by typing

`>MAPCI;MTC;LNS;LTP;POST L site lcm lsg ckt`

and pressing the Enter key.

where

site
is the name of the site where the OPM is located

lcm
is the number of the OPM with the faulty card

lsg
is the number of the line subgroup with the faulty card

ckt
is the number of the circuit associated with the faulty card

Example of a MAP response:

```
LCC PTY RNG .....LEN.........  DN   STA F S LTA TE RESULT
1FR      REM1 00 0 03 03     7213355 MB
```

3 Check the status of the posted line.

If the line status is	Do
manual busy (ManB)	step 5
not ManB	step 4

4 Busy the line by typing

`>BSY`

and pressing the Enter key.

5 Go to the common replacing a line card procedure in this document. When you have completed the procedure, return to this point.

NT6X17 in an OPM (end)

At the MAP terminal

6 Test the line card just replaced by typing

`>DIAG`

and pressing the Enter key.

If DIAG	Do
passed	step 7
failed	step 10

7 Return the line card to service by typing

`>RTS`

and pressing the Enter key.

If RTS	Do
passed	step 8
failed	step 10

8 Send any faulty cards for repair according to local procedure.

9 Record the following items in office records:

- date the card was replaced
- serial number of the card
- symptoms that prompted replacement of the card

Go to step 11.

10 Obtain further assistance in replacing this card by contacting the personnel responsible for higher level of support.

11 You have successfully completed this procedure.

NT6X17 in an RLCM

Application

Use this procedure to replace the following card in an RLCM.

PEC	Suffixes	Name
NT6X17	AA, AB, AC	Standard Line Circuit Type A (POTS)
NT6X17	BA	World Line Card Type A

The NT6X17BA World Line Card Type A replaces the following cards:

- NT6X17AC, North America
- NT6X93AA, Turkey, Belize
- NT6X93BA, Caribbean
- NT6X93CA, China
- NT6X93EA, Australia
- NT6X99AA, UK ScopeDial
- NTMX29AA, British Telephone

Common procedures

The common replacing a line card procedure is referenced in this procedure.

Action

The following flowchart is a summary of the procedure. To replace the card, use the instructions in the procedure that follows the flowchart.

NT6X17
in an RLCM (continued)

Summary of replacing an NT6X17 card in an RLCM

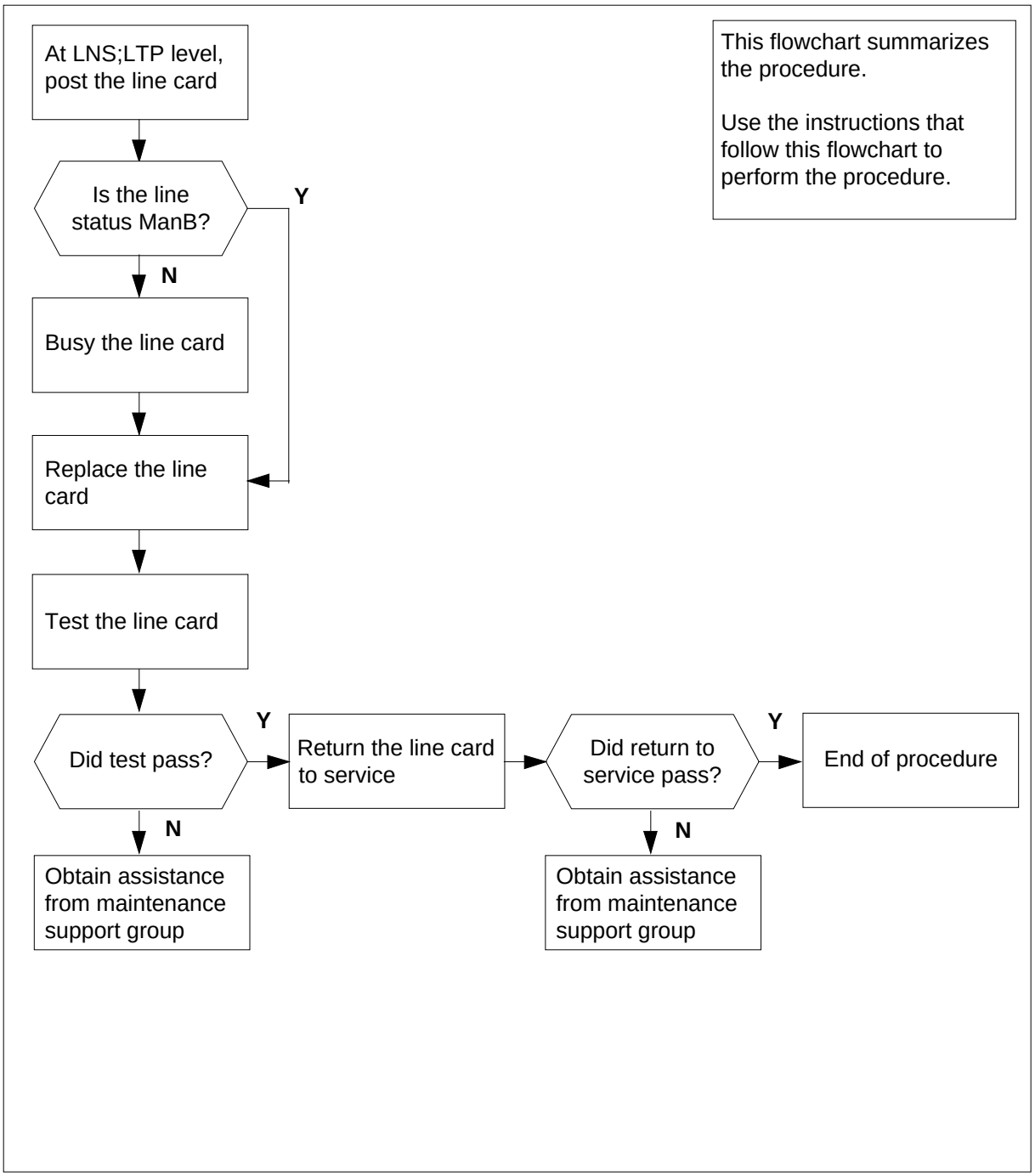

NT6X17 in an RLCM (continued)

Replacing an NT6X17 card in an RLCM

At your current location

1 Obtain a replacement card. Ensure that the replacement card has the same product equipment code (PEC), including suffix, as the card that is to be removed.

At the MAP terminal

2 Access the LTP level of the MAP terminal and post the line associated with the card to be replaced by typing

`>MAPCI;MTC;LNS;LTP;POST L site lcm lsg ckt`

and pressing the Enter key.

where

site
is the name of the site where the RLCM is located

lcm
is the number of the RLCM with the faulty card

lsg
is the number of the line subgroup with the faulty card

ckt
is the number of the circuit associated with the faulty card

Example of a MAP response:

```
LCC PTY RNG .....LEN.........  DN   STA F S LTA TE RESULT
1FR      REM1 00 0 03 03     7213355 MB
```

3 Check the status of the posted line.

If the line status is	Do
manual busy (ManB)	step 5
not ManB	step 4

4 Busy the line by typing

`>BSY`

and pressing the Enter key.

5 Go to the common replacing a line card procedure in this document. When you have completed the procedure, return to this point.

NT6X17 in an RLCM (end)

At the MAP terminal

6 Test the line card just replaced by typing

`>DIAG`

and pressing the Enter key.

If DIAG	Do
passed	step 7
failed	step 10

7 Return the line card to service by typing

`>RTS`

and pressing the Enter key.

If RTS	Do
passed	step 8
failed	step 10

8 Send any faulty cards for repair according to local procedure.

9 Record the following items in office records:

- date the card was replaced
- serial number of the card
- symptoms that prompted replacement of the card

Go to step 11.

10 Obtain further assistance in replacing this card by contacting the personnel responsible for higher level of support.

11 You have successfully completed this procedure.

NT6X17 in an RSC LCM

Application

Use this procedure to replace the following card in RSC LCM.

PEC	Suffixes	Name
NT6X17	AC	Standard line card type A (POTS)
NT6X17	BA	World line card type A

Common procedures

None

Action

The following flowchart is a summary of the procedure. To replace the card, use the instructions in the procedure that follows the flowchart.

NT6X17
in an RSC LCM (continued)

Summary of card replacement procedure for NT6X17 card in RSC LCM

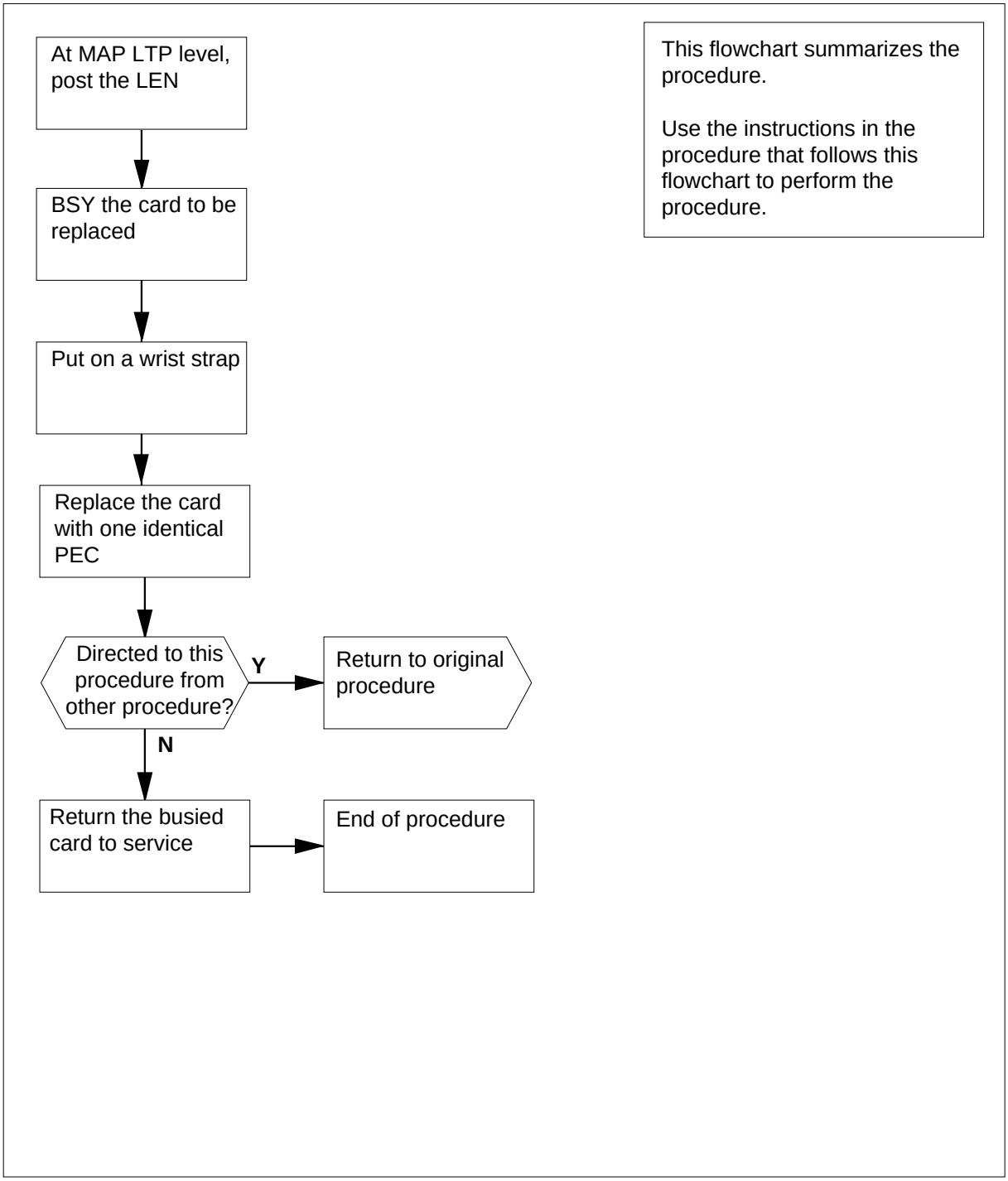

Replacing an NT6X17 card in RSC LCM

At your current location

1 Proceed only if you were either directed to this card replacement procedure from a step in a maintenance procedure, are using the procedure for verifying or accepting cards, or were directed to this procedure by your maintenance support group.

2 Obtain a replacement card. Ensure the replacement card has the same product equipment code (PEC) including suffix, as the card that is to be removed.

At the MAP display

3 Post the LEN of the card to be replaced by typing

```
>MAPCI;MTC;LNS;LTP;POST L site lcm_no lsg_no ckt_no
```

and pressing the Enter key.

where

site
is the site name given to the remote location

lcm_no
is the number of the LCM with the faulty card

lsg_no
is the number of the LSG with the faulty card

ckt_no
is the number of the circuit associated with the faulty card

Example of a MAP display:

NT6X17
in an RSC LCM (continued)

```
 CM    MS    IOD    Net    PM    CCS    LNS    Trks    Ext    Appl
 .     .     .      .      .     .      .      .       .      .
LTP
 0 Quit       Post       DELQ       BUSYQ        PREFIX
 2 Post_
 3            LCC PTY RNG....LEN.. ...DN     STA F S LTA TE RESULT
 4            CKT TYPE FL REM1 00 0 03 03 4931082 IDL
 5 BSY
 6 RTS
 7 DIAG
 8
 9 AIMStat
10 CKTLOC
11 Hold
12 Next_
13
14
15
16 Prefix
17 LCO
18 Level
```

4 Busy the NT6X17 line card by typing

>BSY

and pressing the Enter key.

Example of a MAP display:

```
 CM    MS    IOD    Net    PM    CCS    LNS    Trks    Ext   Appl
 .     .     .      .      .     .      .      .       .     .
LTP
 0 Quit       Post       DELQ       BUSYQ        PREFIX
 2 Post_
 3            LCC PTY RNG....LEN......DN     STA F S LTA TE RESULT
 4            CKT TYPE FL REM1 00 0 03 03 4931082 MB
 5 BSY
 6 RTS
 7 DIAG
 8
 9 AIMStat
10 CKTLOC
11 Hold
12 Next_
13
14
15
16 Prefix
17 LCO
18 Level
```

NT6X17
in an RSC LCM (continued)

At the LCE frame

5

WARNING
Card damage—transport
Take these precautions to protect circuit cards from electrical and mechanical damage during transport:

When handling a circuit card not in an electrostatic discharge (ESD) protective container, stand on a conductive floor mat and wear a wrist strap connected through a 1-megohm resistor, to a suitable grounded object such as a metal workbench or a DMS frame (Northern Telecom Corporate Standard 5028).

Store and transport circuit cards in an ESD protective container.

WARNING
Static electricity damage
Before removing any cards, put on a wrist strap and connect it to the wrist strap grounding point on the left side of the frame supervisory panel of the LCM. This protects equipment against damage caused by static electricity.

DANGER
Equipment damage
Take these precautions when removing or inserting a card:

1. Do not apply direct pressure to the components.
2. Do not force the card into its slot.

CAUTION
Special tools required
Card shrouds and removal tools are required for removing cards from the line drawers. For descriptions of these tools, refer to the notes at the end of this procedure.

NT6X17
in an RSC LCM (continued)

DANGER
Hot materials
Exercise care when handling a line card. The line feed resistor may be hot.

Put on a wrist strap.

Conduct the following procedure.

a Face the drawer shelf and grasp the handle at the bottom of the drawer with your right hand.

b Push up on the drawer latch with your thumb and pull the drawer out until fully withdrawn. It is fully withdrawn when the drawer stop is at the top, to prevent further travel.

c Maintain a slight pull on the handle and lift the faceplate of the drawer approximately 2.5 cm (1 inch).

d While holding the drawer in this position, push the bottom of the drawer nearest the shelf with your left hand, to a position about one 1 cm (.5 inch) to the right.

e Hold the drawer in this position with your left hand and lower the faceplate of the drawer by releasing the grip of your right hand.

f Ensure a card shroud and line card extractor are available.

Note: Card shrouds are required for inserting or removing cards in line drawers. Two sizes are available for use with three-inch and/or six-inch cards.

Descriptions of these shrouds are as follows:

- Line card insertion/withdrawal tool (3")
  - — QTH56A (apparatus code)
  - — A0298291 (common product code)
- Line card insertion/withdrawal tool (6")
  - — QTH58A (apparatus code)
  - — A0313317 (common product code)
- Card removal tools are required for removing cards from line drawers. Two sizes are available.
- Descriptions of these tools are as follows:
- Card removal tool (3-inch or larger)
  - — QTH57A (apparatus code)
  - — A0298292 (common product code)
- Large grip tool for 4-inch or larger cards is NT tool ITA9953

6 Remove the line card to be replaced by using the following steps:

NT6X17
in an RSC LCM (continued)

a Slide a card shroud over the card to be removed and an adjacent card. If there is not an adjacent card on either side, do not use the card shroud.

b Grasp the edge of the card with a line card extractor at a point midway between the top and bottom edges. Hold the extractor in your right hand.

c Squeeze the handles of the extractor together to grasp the card tightly.

d Hold the front cover of the line drawer to steady it with your left hand.

e Pull the extractor away from the drawer and the card will come unplugged from its socket on the drawer backplane.

f Continue pulling the card with the extractor until the card is clear of the shroud.

g Insert the removed card into ESD container and store per local procedures.

7 Replace the faulty card by using the following steps:

a Remove the replacement card from the ESD container.

b Slide the card in the shroud guide slots towards the drawer backplane.

c Hold the front cover of the line drawer with your left hand, to steady it.

d Grasp the top and bottom edges of the card with the fingers of your right hand.

e Push the card towards the backplane until it plugs fully into the backplane socket.

8 Use the following information to determine the next step in this procedure.

If you entered this procedure from	Do
an alarm clearing procedure	step 13
other	step 9

At the MAP display

9 Test the NT6X17 line card by typing

```
>DIAG
```

and pressing the Enter key.

If DIAG	Do
passed	step 10
failed	step 15

10 Return the NT6X17 card to service by typing

```
>RTS
```

NT6X17 in an RSC LCM (end)

and pressing the Enter key.

If RTS	Do
passed	step 11
failed	step 15

11 Send any faulty cards for repair according to local procedure.

12 Record the following items in office records:

- date the card was replaced
- serial number of the card
- symptoms that prompted replacement of the card

13 Go to step 16.

14 Return to the *Alarm Clearing Procedure* that directed you to this card replacement procedure. If necessary, go to the point where the faulty card list was produced, identify the next faulty card on the list, and go to the appropriate replacement procedure in this manual for that card.

15 Obtain further assistance in replacing this card by contacting personnel responsible for a higher level of support.

16 You have successfully completed this procedure. Return to the maintenance procedure that directed you to this card replacement procedure and continue as directed.

NT6X17 in an RSC-S (DS-1) Model A LCME

Application

Use this procedure to replace an NT6X17 card in an RSC-S LCME.

PEC	Suffixes	Name
NT6X17	AA, AB, AC	Standard Line Card Type A (POTS)
NT6X17	BA	World Line Card Type A

The NT6X17BA World Line Card Type A replaces the following cards:

- NT6X17AC, North America
- NT6X93AA, Turkey, Belize
- NT6X93BA, Caribbean
- NT6X93CA, China
- NT6X93EA, Australia
- NT6X99AA, UK ScopeDial
- NTMX29AA, British Telephone

Common procedures

None

Action

The following flowchart is only a summary of the procedure. To replace the card, use the instructions in the procedure that follows the flowchart.

NT6X17
in an RSC-S (DS-1) Model A LCME (continued)

Summary of card replacement procedure for an NT6X17 card in RSC-S LCME

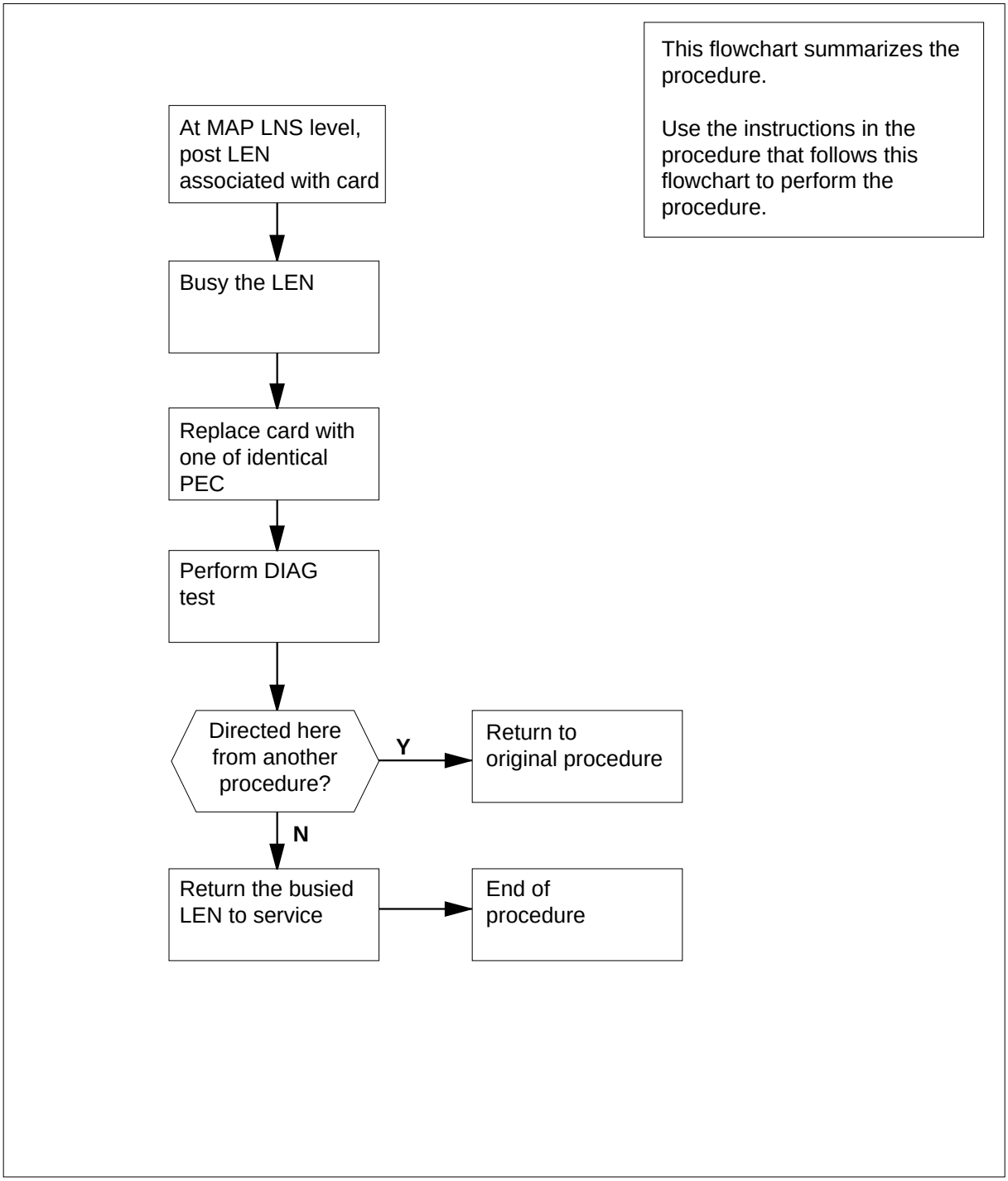

NT6X17
in an RSC-S (DS-1) Model A LCME (continued)

Replacing an NT6X17 card in RSC-S LCME

At the MAP

1 Proceed only if you have been directed to this card replacement procedure from a step in a maintenance procedure, are using the procedure for verifying or accepting cards, or have been directed to this procedure by your maintenance support group.

2 Obtain an NT6X17 replacement card. Ensure the replacement card has the same product equipment code (PEC), including suffix, as the card that is to be removed.

At the MAP terminal

3 Post the LEN of the card to be replaced by typing

```
> mapci;mtc;lns;ltp;post l site lcme_no unit_no lsg_no ckt_no
```

and pressing the Enter key.

where

site
is the location name of the LCME with the faulty card

lcme_no
is the number of the LCME with the faulty card

unit_no
is the number of the LCME unit with the faulty card

lsg_no
is the number of the LSG with the faulty card

ckt_no
is the number of the circuit associated with the faulty card

Example of a MAP display:

NT6X17
in an RSC-S (DS-1) Model A LCME (continued)

```
 CM    MS    IOD    Net    PM    CCS    LNS    Trks    Ext    Appl
 .     .     .      .      .     .      .      .       .      .

LTP
 0 Quit      Post       DELQ       BUSYQ        PREFIX
 2 Post_
 3           LCC PTY RNG...LEN....DN   STA  F  S  LTA  TE  RESULT
 4           1FR HOST 00 0 03 03 4931082 IDL
 5 BSY
 6 RTS
 7 DIAG
 8
 9 AIMStat
10 CKTLOC
11 Hold
12 Next_
13
14
15
16 Prefix
17 LCO
18 Level
```

4 Busy the NT6X17 line card by typing

>BSY

and pressing the Enter key.

Example of a MAP display:

```
 CM    MS    IOD    Net    PM    CCS    LNS    Trks     Ext     Appl
 .     .     .      .      .     .      .      .        .       .

LTP
 0 Quit       Post       DELQ       BUSYQ        PREFIX
 2 Post_
 3            LCC PTY RNG....LEN......DN     STA F S LTA TE RESULT
 4            1FR HOST 00 0 03 03 4931082 MB
 5 BSY
 6 RTS
 7 DIAG
 8
 9 AIMStat
10 CKTLOC
11 Hold
12 Next_
13
14
15
16 Prefix
17 LCO
18 Level
```

NT6X17
in an RSC-S (DS-1) Model A LCME (continued)

At the LCE frame

5

WARNING
Card damage—transport
Take the following precautions to protect circuit cards from electrical and mechanical damage during transport:

When handling a circuit card not in an electrostatic discharge (ESD) protective container, stand on a conductive floor mat and wear a wriststrap, connected through a 1-megohm resistor, to a suitably grounded object, such as a metal workbench or a DMS switch frame (Northern Telecom [Nortel] Corporate Standard 5028). Store and transport circuit cards in an ESD protective container.

WARNING
Static electricity damage
Before removing any cards, put on a wriststrap and connect it to the wriststrap grounding point on the left side of the frame supervisory panel (FSP) of the LCME. This protects the equipment against damage caused by static electricity.

DANGER
Equipment damage
Take the following precautions when removing or inserting a card:

1. Do not apply direct pressure to the components.
2. Do not force the card into the slot.

DANGER
Hot materials
Exercise care when handling the line card. The line feed resistor may be very hot.

NT6X17
in an RSC-S (DS-1) Model A LCME (continued)

CAUTION
Special tools required
Card shrouds and removal tools are required for removing cards from the line drawers. For descriptions of these tools, refer to the following notes.

Put on a wriststrap.

Note: Card shrouds are required for inserting or removing cards in line drawers. Two sizes are available for use with 3-inch and 6-inch cards, as shown in the following table.

Line card insertion / withdrawal tool for	Apparatus code	Common product code
3-inch cards	QTH56A	A0298291
6-inch cards	QTH58A	A0313317

Note: Card removal tools are required for removing cards from line drawers. Two sizes are available, as shown in the following table.

Card removal tool for	Apparatus code	Common product code
3—4 inch cards	QTH57A	A0298292
Note: For 4-inch or larger cards, use the large grip tool ITA9953.		

6 Prepare to remove the faulty card identified in step 1 by opening the line drawer and following these substeps:

a Face the drawer shelf and grasp the handle at the bottom of the drawer with your right hand.

b Push up on the drawer latch with your thumb and pull the drawer out until fully withdrawn. It is fully withdrawn when the drawer stop, at the top, prevents further travel.

c Maintain a slight pull on the handle and lift the faceplate of the drawer approximately 2.5 cm (1.0 in).

d While holding the drawer in this position, push the bottom of the drawer nearest the shelf with your left hand to a position about 1.0 cm (0.5 in) to the right.

e Hold the drawer in this position with your left hand and lower the faceplate of the drawer by releasing the grip of your right hand.

NT6X17
in an RSC-S (DS-1) Model A LCME (continued)

f Ensure a card shroud and line card extractor are available.

7 Remove the line card to be replaced by using the following substeps:

a Slide a card shroud over the card to be removed and an adjacent card. If there is not an adjacent card on either side, do not use the card shroud.

b Grasp the edge of the card with a line card extractor at a point midway between the top and bottom edges. Hold the extractor in your right hand.

c Squeeze the handles of the extractor together to grasp the card tightly.

d Hold the front cover of the line drawer to steady it using your left hand.

e Pull the extractor away from the drawer, and the card will become unplugged from its socket on the drawer backplane.

f Continue pulling the card with the extractor until the card is clear of the shroud.

g Insert the card removed into the ESD container and store using local procedures.

8 Replace the faulty card using the following substeps:

a Remove the replacement card from the ESD container.

b Slide the card in the shroud guide slots toward the drawer backplane.

c Hold the front cover of the line drawer with your left hand to steady it.

d Grasp the top and bottom edges of the card with the fingers of your right hand.

e Push the card toward the backplane until it plugs fully into the backplane socket.

9 Use the following information to determine where to proceed.

If you entered this procedure from	Do
alarm clearing procedures	step 14
other	step 10

At the MAP terminal

10 Test the NT6X17 line card by typing

`>DIAG`

and pressing the Enter key.

If DIAG	Do
passed	step 11
failed	step 14

NT6X17 in an RSC-S (DS-1) Model A LCME (end)

11 Return the NT6X17 card to service by typing

>RTS

and pressing the Enter key.

If RTS	Do
passed	step 12
failed	step 15

12 Send any faulty cards for repair according to local procedure.

13 Record the date the card was replaced, the serial number of the card, and the symptoms that prompted replacement of the card. Go to step 16.

14 Return to the procedure that directed you to this procedure. At the point where a faulty card list was produced, identify the next faulty card on the list and go to the appropriate card replacement procedure for that card in this manual.

15 Obtain further assistance in replacing this card by contacting operating company maintenance personnel.

16 You have successfully completed this procedure. Return to the maintenance procedure that directed you to this card replacement procedure and continue as directed.

NT6X17 in an RSC-S (DS-1) Model B LCME

Application

Use this procedure to replace an NT6X17 card in an RSC-S LCME.

PEC	Suffixes	Name
NT6X17	AA, AB, AC	Standard Line Card Type A (POTS)
NT6X17	BA	World Line Card Type A

The NT6X17BA World Line Card Type A replaces the following cards:

- NT6X17AC, North America
- NT6X93AA, Turkey, Belize
- NT6X93BA, Caribbean
- NT6X93CA, China
- NT6X93EA, Australia
- NT6X99AA, UK ScopeDial
- NTMX29AA, British Telephone

Common procedures

None

Action

The following flowchart is only a summary of the procedure. To replace the card, use the instructions in the procedure that follows the flowchart.

NT6X17
in an RSC-S (DS-1) Model B LCME (continued)

Summary of card replacement procedure for an NT6X17 card in RSC-S LCME

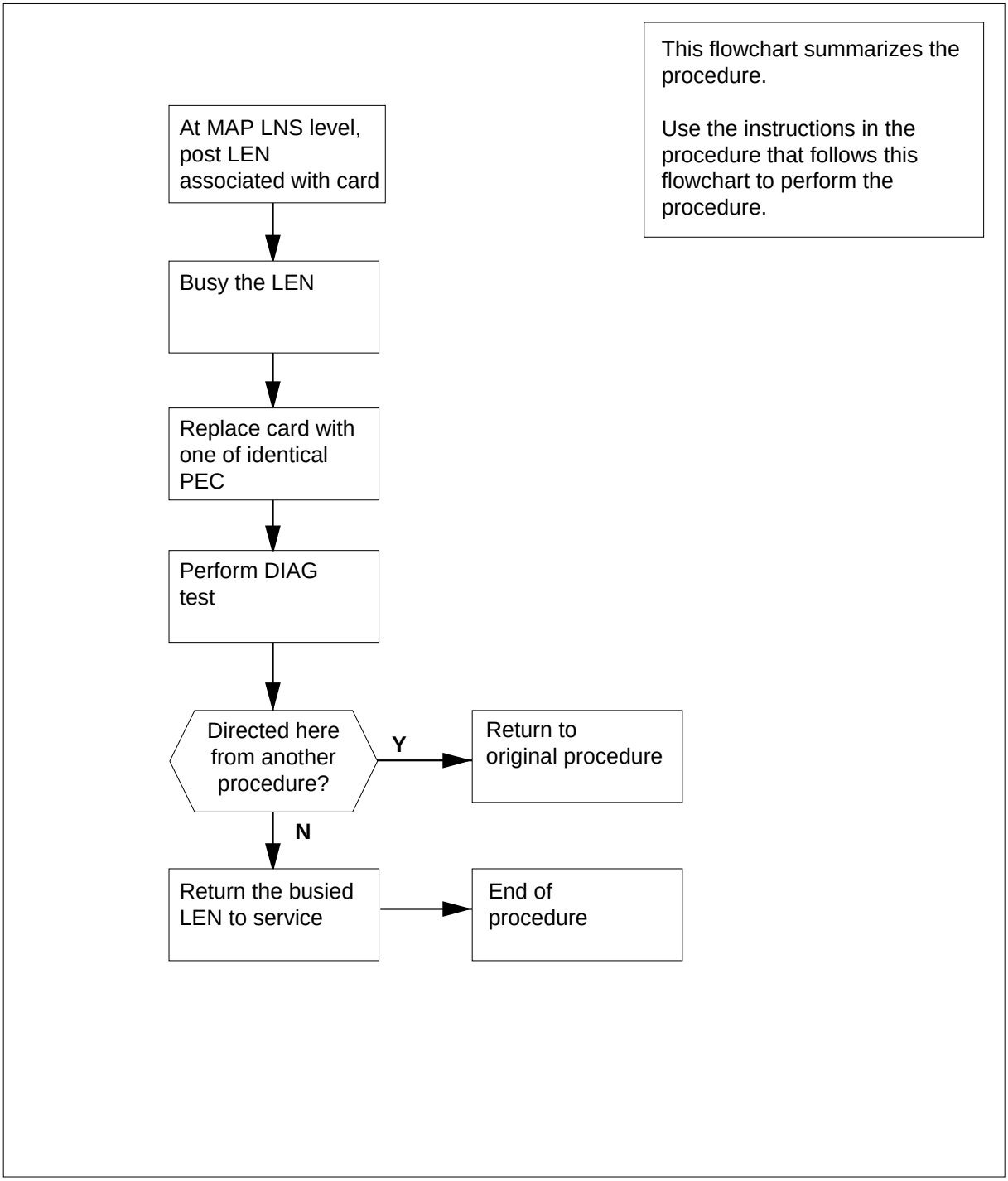

NT6X17 in an RSC-S (DS-1) Model B LCME (continued)

Replacing an NT6X17 card in RSC-S LCME

At the MAP

1 Proceed only if you have been directed to this card replacement procedure from a step in a maintenance procedure, are using the procedure for verifying or accepting cards, or have been directed to this procedure by your maintenance support group.

2 Obtain an NT6X17 replacement card. Ensure the replacement card has the same product equipment code (PEC), including suffix, as the card that is to be removed.

At the MAP terminal

3 Post the LEN of the card to be replaced by typing

```
> mapci;mtc;lns;ltp;post l site lcme_no unit_no lsg_no ckt_no
```

and pressing the Enter key.

where

site
is the location name of the LCME with the faulty card

lcme_no
is the number of the LCME with the faulty card

unit_no
is the number of the LCME unit with the faulty card

lsg_no
is the number of the LSG with the faulty card

ckt_no
is the number of the circuit associated with the faulty card

Example of a MAP display:

NT6X17
in an RSC-S (DS-1) Model B LCME (continued)

```
 CM    MS    IOD    Net    PM    CCS    LNS    Trks    Ext    Appl
 .      .     .       .     .      .       .      .       .       .

LTP
 0 Quit      Post       DELQ       BUSYQ        PREFIX
 2 Post_
 3           LCC PTY RNG...LEN....DN   STA  F  S  LTA  TE  RESULT
 4           1FR HOST 00 0 03 03 4931082 IDL
 5 BSY
 6 RTS
 7 DIAG
 8
 9 AIMStat
10 CKTLOC
11 Hold
12 Next_
13
14
15
16 Prefix
17 LCO
18 Level
```

4 Busy the NT6X17 line card by typing

>BSY

and pressing the Enter key.

Example of a MAP display:

```
 CM    MS    IOD    Net    PM    CCS    LNS    Trks     Ext     Appl
 .      .     .       .     .      .       .      .        .       .

LTP
 0 Quit       Post       DELQ       BUSYQ        PREFIX
 2 Post_
 3            LCC PTY RNG....LEN......DN     STA F S LTA TE RESULT
 4            1FR HOST 00 0 03 03 4931082 MB
 5 BSY
 6 RTS
 7 DIAG
 8
 9 AIMStat
10 CKTLOC
11 Hold
12 Next_
13
14
15
16 Prefix
17 LCO
18 Level
```

NT6X17
in an RSC-S (DS-1) Model B LCME (continued)

At the LCE frame

5

WARNING
Card damage—transport
Take the following precautions to protect circuit cards from electrical and mechanical damage during transport:

When handling a circuit card not in an electrostatic discharge (ESD) protective container, stand on a conductive floor mat and wear a wriststrap connected, through a 1-megohm resistor, to a suitably grounded object, such as a metal workbench or a DMS switch frame (Northern Telecom [Nortel] Corporate Standard 5028). Store and transport circuit cards in an ESD protective container.

WARNING
Static electricity damage
Before removing any cards, put on a wriststrap and connect it to the wriststrap grounding point on the left side of the modular supervisory panel (MSP) of the LCME. This protects the equipment against damage caused by static electricity.

DANGER
Equipment damage
Take the following precautions when removing or inserting a card:

1. Do not apply direct pressure to the components.
2. Do not force the cards into the slots.

DANGER
Hot materials
Exercise care when handling the line card. The line feed resistor may be very hot.

NT6X17
in an RSC-S (DS-1) Model B LCME (continued)

CAUTION
Special tools required
Card shrouds and removal tools are required for removing cards from the line drawers. For descriptions of these tools, refer to the following notes.

Put on a wriststrap.

Note: Card shrouds are required for inserting or removing cards in line drawers. Two sizes are available for use with 3-inch and 6-inch cards, as shown in the following table.

Line card insertion / withdrawal tool for	Apparatus code	Common product code
3-inch cards	QTH56A	A0298291
6-inch cards	QTH58A	A0313317

Note: Card removal tools are required for removing cards from line drawers. Two sizes are available, as shown in the following table.

Card removal tool for	Apparatus code	Common product code
3—4 inch cards	QTH57A	A0298292
Note: For 4-inch or larger cards, use the large grip tool ITA9953.		

6 Prepare to remove the faulty card identified in step 1 by opening the line drawer and following these substeps:

a Face the drawer shelf and grasp the handle at the bottom of the drawer with your right hand.

b Push up on the drawer latch with your thumb and pull the drawer out until fully withdrawn. It is fully withdrawn when the drawer stop, at the top, prevents further travel.

c Maintain a slight pull on the handle and lift the faceplate of the drawer approximately 2.5 cm (1.0 in).

d While holding the drawer in this position, push the bottom of the drawer nearest the shelf with your left hand to a position about 1.0 cm (0.5 in) to the right.

e Hold the drawer in this position with your left hand and lower the faceplate of the drawer by releasing the grip of your right hand.

NT6X17
in an RSC-S (DS-1) Model B LCME (continued)

f Ensure a card shroud and line card extractor are available.

7 Remove the line card to be replaced by using the following substeps:

a Slide a card shroud over the card to be removed and an adjacent card. If there is not an adjacent card on either side, do not use the card shroud.

b Grasp the edge of the card with a line card extractor at a point midway between the top and bottom edges. Hold the extractor in your right hand.

c Squeeze the handles of the extractor together to grasp the card tightly.

d Hold the front cover of the line drawer to steady it using your left hand.

e Pull the extractor away from the drawer, and the card will become unplugged from its socket on the drawer backplane.

f Continue pulling the card with the extractor until the card is clear of the shroud.

g Insert the card removed into the ESD container and store using local procedures.

8 Replace the faulty card using the following substeps:

a Remove the replacement card from the ESD container.

b Slide the card in the shroud guide slots toward the drawer backplane.

c Hold the front cover of the line drawer with your left hand to steady it.

d Grasp the top and bottom edges of the card with the fingers of your right hand.

e Push the card toward the backplane until it plugs fully into the backplane socket.

9 Use the following information to determine where to proceed.

If you entered this procedure from	Do
alarm clearing procedures	step 14
other	step 10

At the MAP terminal

10 Test the NT6X17 line card by typing

`>DIAG`

and pressing the Enter key.

If DIAG	Do
passed	step 11
failed	step 14

NT6X17 in an RSC-S (DS-1) Model B LCME (end)

11 Return the NT6X17 card to service by typing

>RTS

and pressing the Enter key.

If RTS	Do
passed	step 12
failed	step 15

12 Send any faulty cards for repair according to local procedure.

13 Record the date the card was replaced, the serial number of the card, and the symptoms that prompted replacement of the card. Go to step 16.

14 Return to the procedure that directed you to this procedure. At the point where a faulty card list was produced, identify the next faulty card on the list and go to the appropriate card replacement procedure for that card in this manual.

15 Obtain further assistance in replacing this card by contacting operating company maintenance personnel.

16 You have successfully completed this procedure. Return to the maintenance procedure that directed you to this card replacement procedure and continue as directed.

NT6X17 in a STAR or RLD

Application

Use this procedure to replace the following card in a STAR or remote line drawer (RLD).

PEC	Suffixes	Name
NT6X17	AA, AB, AC	Standard Line Circuit Type A (POTS)
NT6X17	BA	World Line Card Type A

The NT6X17BA World Line Card Type A replaces the NT6X17AC in North America.

Common procedures

The common replacing a line card procedure is referenced in this procedure.

Action

The following flowchart is a summary of the procedure. To replace the card, use the instructions in the procedure that follows the flowchart.

NT6X17
in a STAR or RLD (continued)

Summary of replacing an NT6X17 card in a STAR or RLD

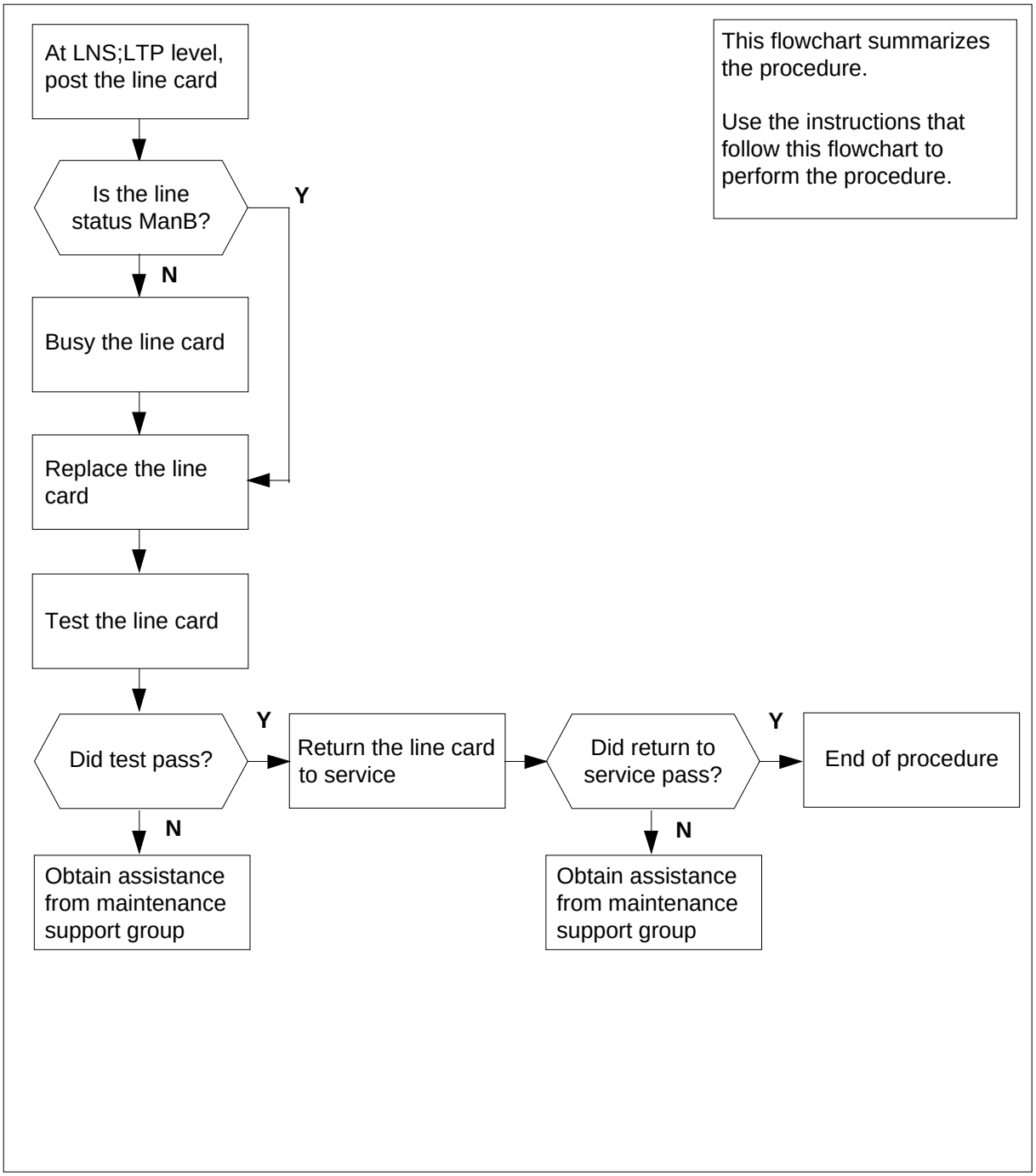

Replacing an NT6X17 card in a STAR or RLD

At your current location

1 Get a replacement card. Make sure the replacement card has the same product equipment code (PEC), including suffix, as the card that is to be removed.

At the MAP terminal

2 To access the LTP level of the MAP terminal and post the line associated with the card to be replaced, type

`>MAPCI;MTC;LNS;LTP;POST L site frame unit lsg ckt`

and press the Enter key.

where

site
is the name of the site where the STAR is located

frame
is the frame number of the STAR with the faulty card

unit
is 0 for the STAR

lsg
is the number of the line subgroup with the faulty card (0-35)

ckt
is the number of the circuit associated with the faulty card (0-31)

Example of a MAP response:

```
LCC PTY RNG .....LEN.........  DN   STA F S LTA TE RESULT
RES      REM1 00 0 03 03     7213355 MB
```

3 Check the status of the posted line.

If the line status is	Do
manual busy (ManB)	step 5
not ManB	step 4

4 To busy the line, type

`>BSY`

and press the Enter key.

5 Go to the common replacing a line card procedure in this document. When you have completed the procedure, return to this point.

NT6X17 in a STAR or RLD (end)

At the MAP terminal

6 To test the line card just replaced, type

>DIAG

and press the Enter key.

If DIAG	Do
passes	step 7
fails	step 10

7 To return the line card to service, type

>RTS

and press the Enter key.

If RTS	Do
passes	step 8
fails	step 10

8 Send any faulty cards for repair according to local procedure.

9 Record the following items in office records:

- date the card was replaced
- serial number of the card
- indications that prompted replacement of the card

Go to step 11.

10 Get additional assistance in replacing this card by contacting the personnel responsible for higher level of support.

11 You have correctly completed this procedure.

NT6X18 in an IOPAC ILCM

Application

Use this procedure to replace the following card in an International line concentrating module (ILCM).

PEC	Suffixes	Name
NT6X18	AA, AB	Line card type B (Coin/Ground Start)
NT6X18	BA	World Line Card Type B

Common procedures

The common replacing a line card procedure is referenced in this procedure.

Action

The following flowchart is only a summary of the procedure. To replace the card, use the instructions in the step-action procedure that follows the flowchart.

NT6X18
in an IOPAC ILCM (continued)

Summary of card replacement procedure for an NT6X18 in an ILCM

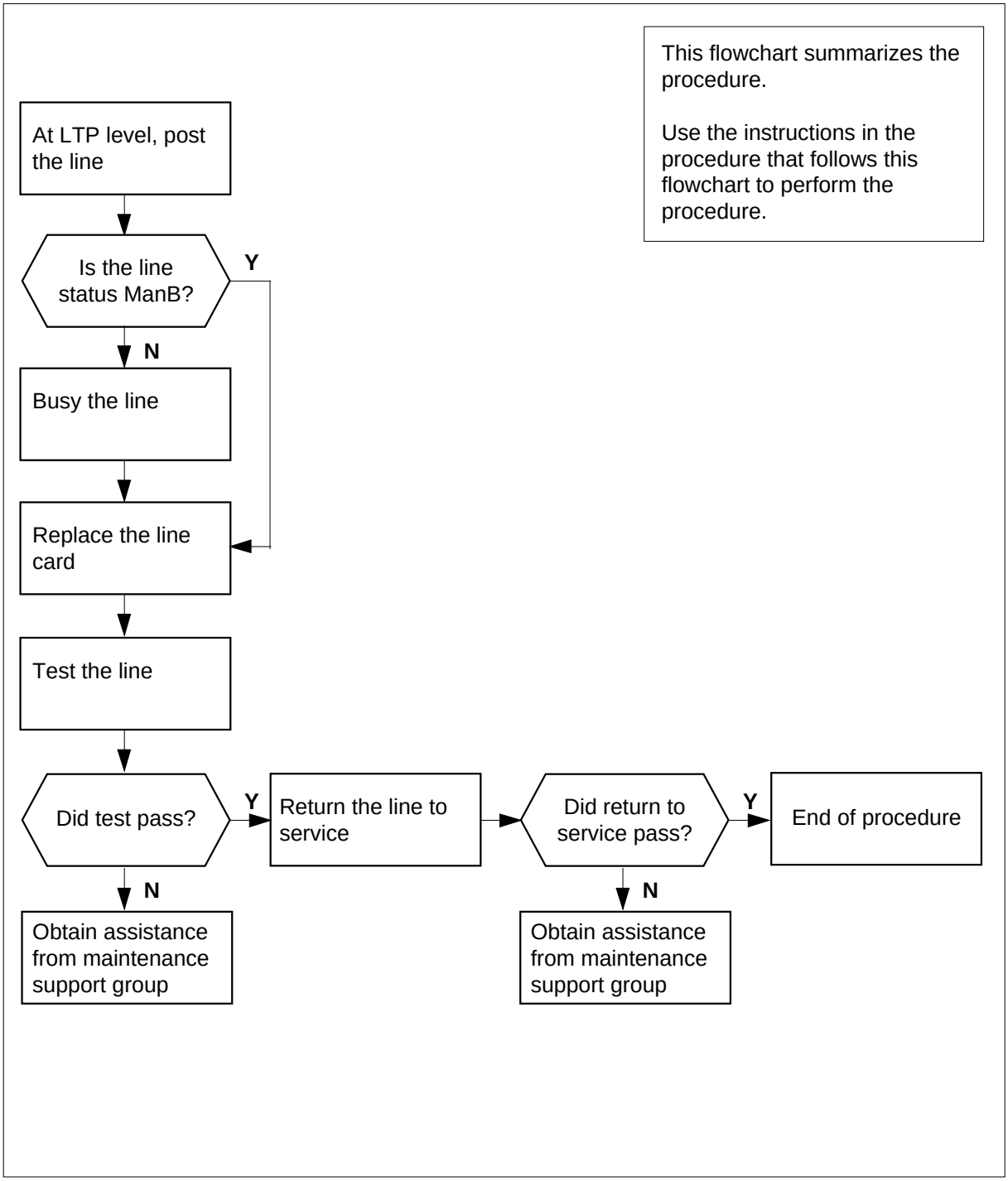

NT6X18 in an IOPAC ILCM (continued)

Replacing an NT6X18 in an ILCM

At the MAP

1 Obtain a replacement card. Ensure the replacement card has the same product equipment code (PEC), including suffix, as the card that is to be removed.

At the MAP terminal

2 Access the line test position (LTP) level of the MAP display and post the line associated with the card to be replaced by typing

`>MAPCI;MTC;LNS;LTP;POST L site lcm lsg ckt`

and pressing the Enter key.

where

site
is the name of the site where the IOPAC is located

lcm
is the number of the ILCM with the faulty card

lsg
is the number of the line subgroup with the faulty card

ckt
is the number of the circuit associated with the faulty card

Example of a MAP response:

```
LCC PTY RNG .....LEN.........  DN   STA F S LTA TE RESULT
1FR      REM1 00 0 03 03     7213355 MB
```

3 Check the status of the posted line.

If the line status is	Do
manual busy (ManB)	step 5
not Man B	step 4

4 Busy the line by typing

`>BSY`

and pressing the Enter key.

At the IOPAC cabinet

5 Go to the common replacing a line card procedure in this document. When you have completed the procedure, return to this step.

NT6X18 in an IOPAC ILCM (end)

At the MAP terminal

6 Test the line card just replaced by typing

>DIAG

and pressing the Enter key.

If the DIAG	Do
passed	step 7
failed	step 10

7

ATTENTION

There is a new diagnostics test for NT6X18AA/AB cards. This NT6 18 card may be good. See the NT6X18 line card description in the general maintenance section of this book for information on running an enhanced diagnostics.

Return the line card to service by typing

>RTS

and pressing the Enter key.

If RTS	Do
passed	step 8
failed	step 10

8 Send any faulty cards for repair according to local procedure.

9 Record the following items in office records:

- date the card was replaced
- serial number of the card
- symptoms that prompted replacement of the card

Go to step 11.

10 Obtain further assistance in replacing this card by contacting the personnel responsible for higher level of support.

11 You have successfully completed this procedure.

NT6X18 in an OPAC LCM

Application

Use this procedure to replace the following card in a line concentrating module (LCM).

PEC	Suffixes	Name
NT6X18	AA, AB	Line card type B (Coin/Ground Start)
NT6X18	BA	World Line Card Type B

Common procedures

The common replacing a line card procedure is referenced in this procedure.

Action

The following flowchart is only a summary of the procedure. To replace the card, use the instructions in the step-action procedure that follows the flowchart.

NT6X18
in an OPAC LCM (continued)

Summary of card replacement procedure for an NT6X18 in an LCM

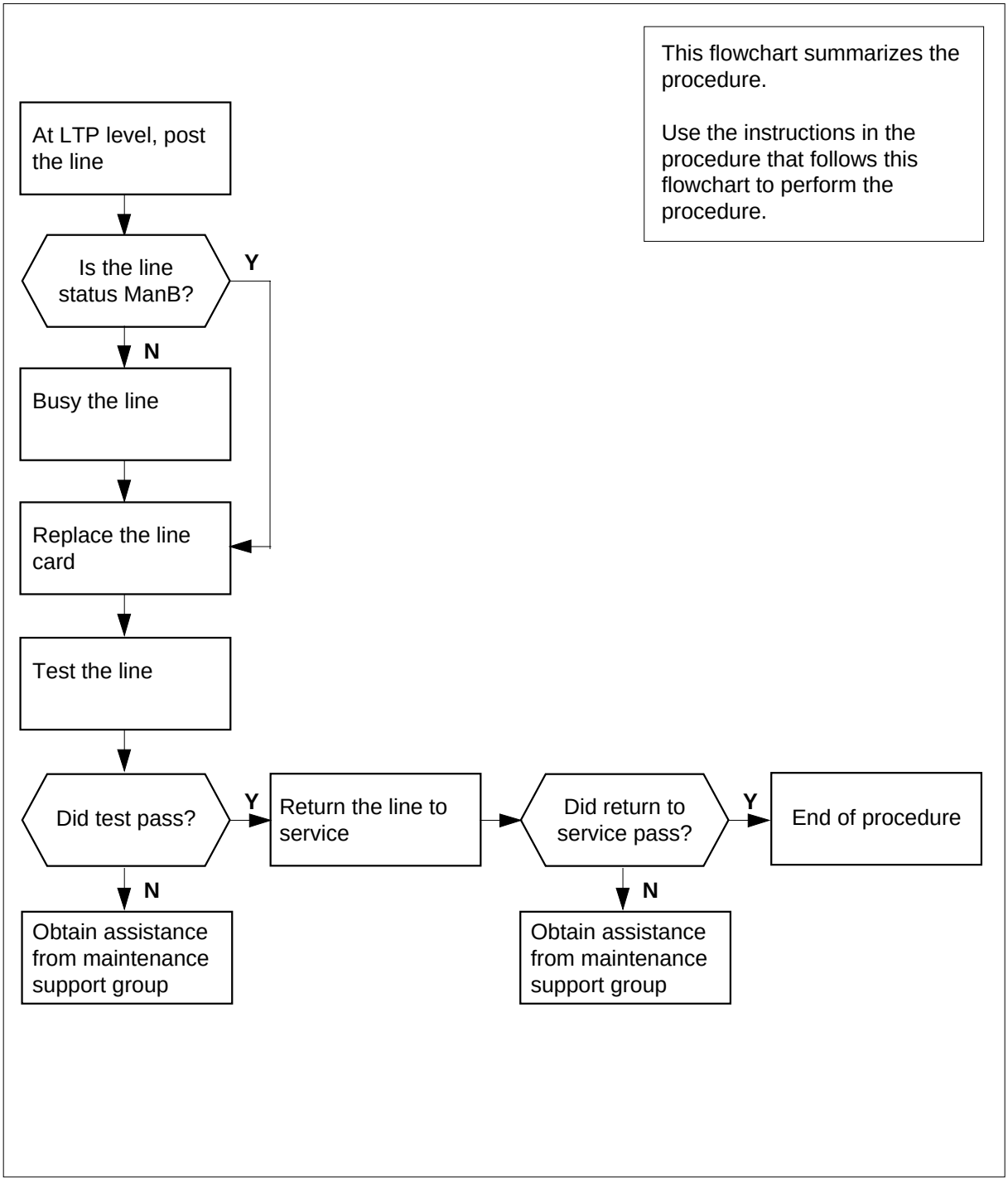

Replacing an NT6X18 in an LCM

At the MAP

1 Obtain a replacement card. Ensure the replacement card has the same product equipment code (PEC), including suffix, as the card that is to be removed.

At the MAP terminal

2 Access the line test position (LTP) level of the MAP display and post the line associated with the card to be replaced by typing

```
>MAPCI;MTC;LNS;LTP;POST L site rlcm lsg ckt
```

and pressing the Enter key.

where

site
is the name of the site where the OPAC is located

rlcm
is the number of the OPAC with the faulty card

lsg
is the number of the line subgroup with the faulty card

ckt
is the number of the circuit associated with the faulty card

Example of a MAP response:

```
LCC PTY RNG .....LEN.........  DN   STA F S LTA TE RESULT
1FR      REM1 00 0 03 03     7213355 MB
```

3 Check the status of the posted line.

If the line status is	Do
manual busy (ManB)	step 5
not Man B	step 4

4 Busy the line by typing

```
>BSY
```

and pressing the Enter key.

At the LCM

5 Go to the common replacing a line card procedure in this document. When you have completed the procedure, return here.

NT6X18 in an OPAC LCM (end)

At the MAP terminal

6 Test the line card just replaced by typing

>DIAG

and pressing the Enter key.

If the DIAG	Do
passed	step 7
failed	step 10

7

ATTENTION

There is a new diagnostics test for NT6X18AA/AB cards. This NT6X18 card may be good. See the NT6X18 line card description in the general maintenance section of this book for information on running an enhanced diagnostics.

Return the line card to service by typing

>RTS

and pressing the Enter key.

If RTS	Do
passed	step 8
failed	step 10

8 Send any faulty cards for repair according to local procedure.

9 Record the following items in office records:

- date the card was replaced
- serial number of the card
- symptoms that prompted replacement of the card

Go to step 11.

10 Obtain further assistance in replacing this card by contacting the personnel responsible for higher level of support.

11 You have successfully completed this procedure.

NT6X18 in an OPM

Application

Use this procedure to replace the following card in an OPM.

PEC	Suffixes	Name
NT6X18	AA, AB	Line Card Type B (Coin/Ground Start)
NT6X18	BA	World Line Card Type B

Common procedures

The common replacing a line card procedure is referenced in this procedure.

Action

The following flowchart is a summary of the procedure. To replace the card, use the instructions in the procedure that follows the flowchart.

NT6X18
in an OPM (continued)

Summary of replacing an NT6X18 card in an OPM

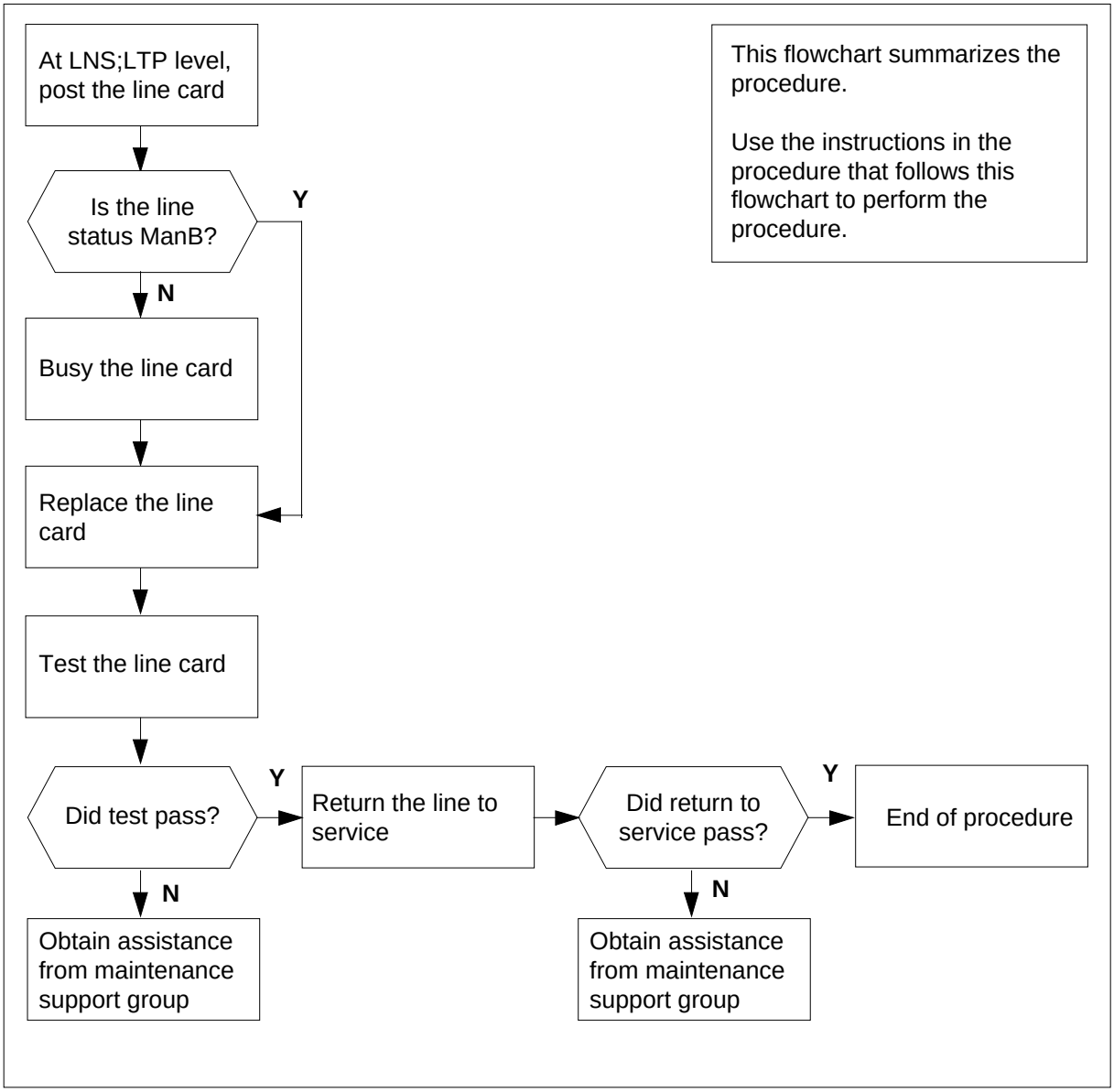

Replacing an NT6X18 card in an OPM

At your current location

1 Obtain a replacement card. Ensure that the replacement card has the same product equipment code (PEC), including suffix, as the card that is to be removed.

At the MAP terminal

2 Access the LTP level of the MAP and post the line associated with the card to be replaced by typing

`>MAPCI;MTC;LNS;LTP;POST L site lcm lsg ckt`

and pressing the Enter key.

where

site
is the name of the site where the OPM is located

lcm
is the number of the OPM with the faulty card

lsg
is the number of the line subgroup with the faulty card

ckt
is the number of the circuit associated with the faulty card

Example of a MAP response:

```
LCC PTY RNG .....LEN.........  DN   STA F S LTA TE RESULT
1FR         REM1 00 0 03 03   7213355 MB
```

3 Check the status of the posted line.

If the line status is	Do
manual busy (ManB)	step 5
not ManB	step 4

4 Busy the line by typing

`>BSY`

and pressing the Enter key.

5 Go to the common replacing a line card procedure in this document. When you have completed the procedure, return to this point.

NT6X18 in an OPM (end)

At the MAP terminal

6

ATTENTION
There is a new diagnostics test for NT6X18AA/AB cards. This NT6X18 card may be good. See the NT6X18 line card description in the general maintenance section of this book for information on running an enhanced diagnostics.

Test the line card just replaced by typing

>DIAG

and pressing the Enter key.

If DIAG	Do
passed	step 7
failed	step 10

7 Return the line card to service by typing

>RTS

and pressing the Enter key.

If RTS	Do
passed	step 8
failed	step 10

8 Send any faulty cards for repair according to local procedure.

9 Record the following items in office records:

- date the card was replaced
- serial number of the card
- symptoms that prompted replacement of the card

Go to step 11.

10 Obtain further assistance in replacing this card by contacting the personnel responsible for higher level of support.

11 You have successfully completed this procedure.

NT6X18 in an RLCM

Application

Use this procedure to replace the following card in an RLCM.

PEC	Suffixes	Name
NT6X18	AA, AB	Line Card Type B (Coin/Ground Start)
NT6X18	BA	World Line Card Type B

Common procedures

The common replacing a line card procedure is referenced in this procedure.

Action

The following flowchart is a summary of the procedure. To replace the card, use the instructions in the procedure that follows the flowchart.

NT6X18
in an RLCM (continued)

Summary of replacing an NT6X18 card in an RLCM

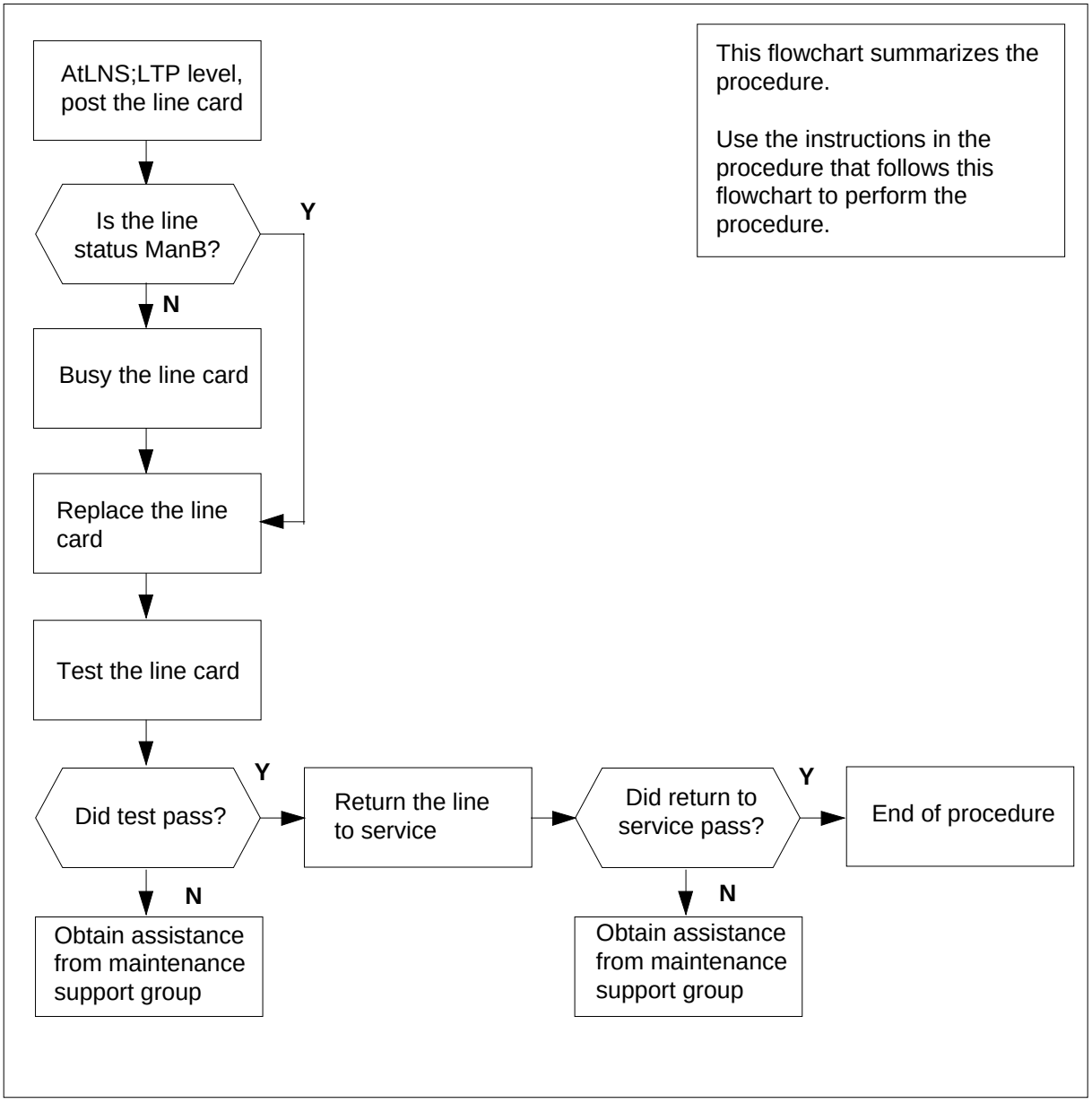

Replacing an NT6X18 card in an RLCM

At your current location

1 Obtain a replacement card. Ensure that the replacement card has the same product equipment code (PEC), including suffix, as the card that is to be removed.

At the MAP terminal

2 Access the LTP level of the MAP and post the line associated with the card to be replaced by typing

`>MAPCI;MTC;LNS;LTP;POST L site lcm lsg ckt`

and pressing the Enter key.

where

site
is the name of the site where the RLCM is located

lcm
is the number of the RLCM with the faulty card

lsg
is the number of the line subgroup with the faulty card

ckt
is the number of the circuit associated with the faulty card

Example of a MAP response:

```
LCC PTY RNG .....LEN.........  DN   STA F S LTA TE RESULT
1FR         REM1 00 0 03 03   7213355 MB
```

3 Check the status of the posted line.

If the line status is	Do
manual busy (ManB)	step 5
not ManB	step 4

4 Busy the line by typing

`>BSY`

and pressing the Enter key.

5 Go to the common replacing a line card procedure in this document. When you have completed the procedure, return to this point.

NT6X18 in an RLCM (end)

At the MAP terminal

6

> **ATTENTION**
> There is a new diagnostics test for NT6X18AA/AB cards. This NT6X18 card may be good. See the NT6X18 line card description in the general maintenance section of this book for information on running an enhanced diagnostics.

Test the line card just replaced by typing

>DIAG

and pressing the Enter key.

If DIAG	Do
passed	step 7
failed	step 10

7 Return the line card to service by typing

>RTS

and pressing the Enter key.

If RTS	Do
passed	step 8
failed	step 10

8 Send any faulty cards for repair according to local procedure.

9 Record the following items in office records:

- date the card was replaced
- serial number of the card
- symptoms that prompted replacement of the card

Go to step 11.

10 Obtain further assistance in replacing this card by contacting the personnel responsible for higher level of support.

11 You have successfully completed this procedure.

NT6X18 in an RSC LCM

Application

Use this procedure to replace the following card in an RSC LCM.

PEC	Suffixes	Name
NT6X18	AA, AB	Line Card Type B (Coin/Ground Start)
NT6X18	BA	World Line Card Type B

Common procedures

None

Action

The following flowchart is a summary of the procedure. To replace the card, use the instructions in the procedure that follows the flowchart.

NT6X18
in an RSC LCM (continued)

Summary of card replacement procedure for NT6X18 card in an RSC LCM

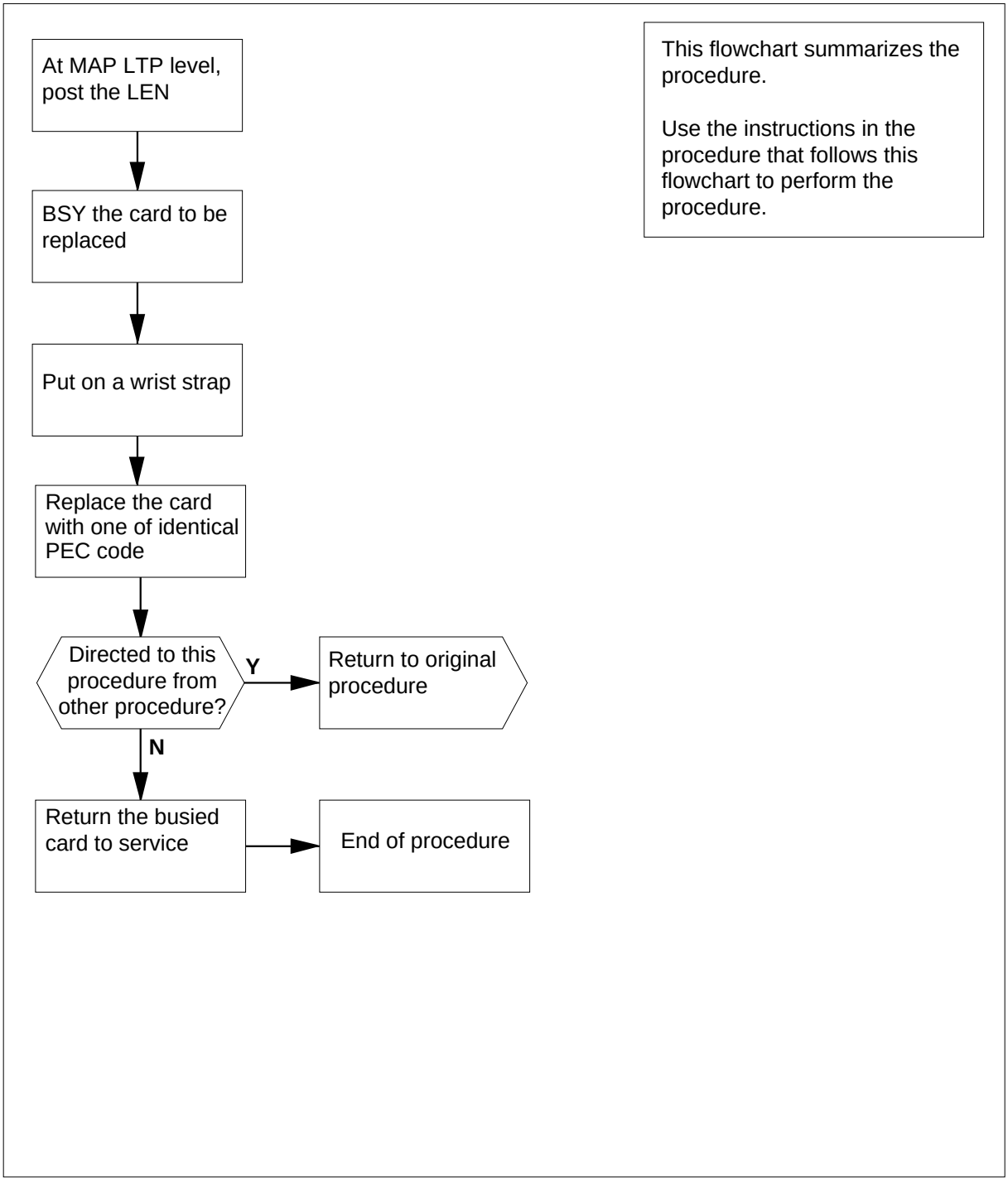

NT6X18 in an RSC LCM (continued)

Replacing an NT6X18 card in an RSC LCM

At your current location

1 Proceed only if you were either directed to this card replacement procedure from a step in a maintenance procedure, are using the procedure for verifying or accepting cards, or were directed to this procedure by your maintenance support group.

2 Obtain a replacement card. Ensure the replacement card has the same product equipment code (PEC) including suffix, as the card to be removed.

At the MAP

3 Post the LEN of the card to be replaced by typing

```
>MAPCI;MTC;LNS;LTP;POST L SITE lcm_no lsg_no ckt_no
```

and pressing the Enter key.

where

site
is the site name given to the remote location

lcm_no
is the number of the LCM with the faulty card

lsg_no
is the number of the LSG with the faulty card

ckt_no
is the number of the circuit associated with the faulty card

Example of a MAP display:

NT6X18 in an RSC LCM (continued)

```
 CM    MS    IOD    Net    PM     CCS     LNS   Trks    Ext    Appl
  .     .     .      .      .      .       .      .      .       .
LTP
 0 Quit       Post       DELQ       BUSYQ        PREFIX
 2 Post_
 3           LCC PTY RNG....LEN......DN     STA  F  S  LTA  TE RESULT
 4           CKT TYPE FL   REM1 00 0 03 03 4931082 IDL
 5 BSY
 6 RTS
 7 DIAG
 8
 9 AIMStat
10 CKTLOC
11 Hold
12 Next_
13
14
15
16 Prefix
17 LCO
18 Level
```

4 Busy the NT6X18 line card by typing

>BSY

and pressing the Enter key.

Example of a MAP display:

```
 CM    MS    IOD    Net    PM     CCS     LNS   Trks    Ext    Appl
  .     .     .      .      .      .       .      .      .       .
LTP
 0 Quit       Post       DELQ       BUSYQ        PREFIX
 2 Post_
 3           LCC PTY RNG....LEN......DN     STA  F  S  LTA  TE RESULT
 4           CKT TYPE FL   REM1 00 0 03 03 4931082 MB
 5 BSY
 6 RTS
 7 DIAG
 8
 9 AIMStat
10 CKTLOC
11 Hold
12 Next_
13
14
15
16 Prefix
17 LCO
18 Level
```

NT6X18
in an RSC LCM (continued)

At the LCE frame

5

WARNING
Card damage—transport
Take the following precautions to protect circuit cards from electrical and mechanical damage when transporting them.

When handling a circuit card not in an electrostatic discharge (ESD) protective container, stand on a conductive floor mat and wear a wrist strap connected, through a 1-megohm resistor, to a suitably grounded object, such as a metal workbench or a DMS frame (Northern Telecom Corporate Standard 5028).

Store and transport circuit cards in an ESD protective container.

WARNING
Static electricity damage
Before removing any cards, put on a wrist strap and connect it to the wrist strap grounding point on the left side of the frame supervisory panel of the LCM. This protects the equipment against damage caused by static electricity.

DANGER
Equipment damage
Take these precautions when removing or inserting a card:

1. Do not apply direct pressure to the components.
2. Do not force the cards into the slots.

CAUTION
Special tools required
Card shrouds and removal tools are required for removing cards from the line drawers. For descriptions of these tools, refer to the notes at the end of this procedure.

Put on a wrist strap.

NT6X18
in an RSC LCM (continued)

6

DANGER
Hot materials
Exercise care when handling the line card. The line feed resistor may be hot.

Open the line drawer using the following steps:

a Face the drawer shelf and grasp the handle at the bottom of the drawer with your right hand.

b Push up on the drawer latch with your thumb and pull the drawer out until fully withdrawn. It is fully withdrawn when the drawer stop is at the top, to prevent further travel.

c Maintain a slight pull on the handle and lift the faceplate of the drawer approximately 2.5 cm (1 inch).

d While holding the drawer in this position, push the bottom of the drawer nearest the shelf with your left hand, to a position about one 1 cm (.5 inch) to the right.

e Hold the drawer in this position with your left hand and lower the faceplate of the drawer by releasing the grip of your right hand.

f Ensure that a card shroud and line card extractor are available.

Note: Card shrouds are required for inserting or removing cards in line drawers. Two sizes are available for use with 3-inch and 6-inch cards, as shown in the following table.

Line card insertion / withdrawal tool for	Apparatus code	Common product code
3-inch cards	QTH56A	A0298291
6-inch cards	QTH58A	A0313317

Note: Card removal tools are required for removing cards from line drawers. Two sizes are available, as shown in the following table.

Card removal tool for	Apparatus code	Common product code
3—4 inch cards	QTH57A	A0298292
Note: For 4-inch or larger cards, use the large grip tool ITA9953.		

NT6X18 in an RSC LCM (continued)

7 Remove the line card to be replaced by using the following steps:

Slide a card shroud over the card to be removed and an adjacent card. If there is not an adjacent card on either side, do not use the card shroud.

Grasp the edge of the card with a line card extractor at a point midway between the top and bottom edges. Hold the extractor in your right hand.

Squeeze the handles of the extractor together to grasp the card tightly.

Hold the front cover of the line drawer to steady it with your left hand.

Pull the extractor away from the drawer and the card will come unplugged from its socket on the drawer backplane.

Continue pulling the card with the extractor until the card is clear of the shroud.

Insert the removed card into ESD container and store per local procedures.

8 Replace the faulty card by using the following steps:

a Remove the replacement card from the ESD container.

b Slide the card in the shroud guide slots towards the drawer backplane.

c Hold the front cover of the line drawer with your left hand, to steady it.

d Grasp the top and bottom edges of the card with the fingers of your right hand.

e Push the card towards the backplane until it plugs fully into the backplane socket.

9 Use the following information to determine the next step in this procedure.

If you entered this procedure from	Do
an alarm clearing procedure	step14
other	step10

At the MAP terminal

10 Test the NT6X18 line card by typing

`>DIAG`

and pressing the Enter key.

If DIAG	Do
passed	step11
failed	step14

Note: If the suffix of the NT6X18 card is -AA or -AB, and the line is identified as ground start (GND=Y in table LNINV), run the diagnostics again if the initial diagnostics fails. This action is possible by adding the Service order (Servord) option NPGD, Negate Partial Ground Start

NT6X18 in an RSC LCM (end)

Diagnostics. This option allows the line to be tested against a smaller subset of ground start diagnostics. Therefore, when option NPGD is set in table LENLINES, loop detector, reversal relay, and ground start relay tests are skipped.

11 Return the NT6X18 card to service by typing

>RTS

and pressing the Enter key.

If RTS	Do
passed	step12
failed	step 15

12 Send any faulty cards for repair according to local procedure.

13 Record the following items in office records:

- date the card was replaced
- serial number of the card
- symptoms that prompted replacement of card

Go to step 16.

14 Return to the *Alarm Clearing Procedure* that directed you to this procedure. At the point where the faulty card list was produced, identify the next faulty card on the list and go to the appropriate card replacement procedure for that card in this manual.

15 Obtain further assistance in replacing this card by contacting personnel responsible for a higher level of support.

16 You have successfully completed this procedure. Return to the maintenance procedure that directed you to this card replacement procedure and continue as directed.

NT6X18 in an RSC-S (DS-1) Model A LCME

Application

Use this procedure to replace an NT6X18 card in an RSC-S LCME.

PEC	Suffixes	Name
NT6X18	AA, AB	Line Card Type B (Coin/Ground Start)
NT6X18	BA	World Line Card Type B

The NT6X18BA World Line Card Type B replaces the following cards:

- NT6X18AA, North America
- NT6X94AB, Turkey, Belize, Guyana
- NT6X94BB, Caribbean
- NT6X94CA, China
- NT6X94DA, Morocco
- NT6X33AA, Japan Type A

Common procedures

None

Action

The following flowchart is only a summary of the procedure. To replace the card, use the instructions in the procedure that follows the flowchart.

NT6X18
in an RSC-S (DS-1) Model A LCME (continued)

Summary of card replacement procedure for an NT6X18 card in RSC-S LCME

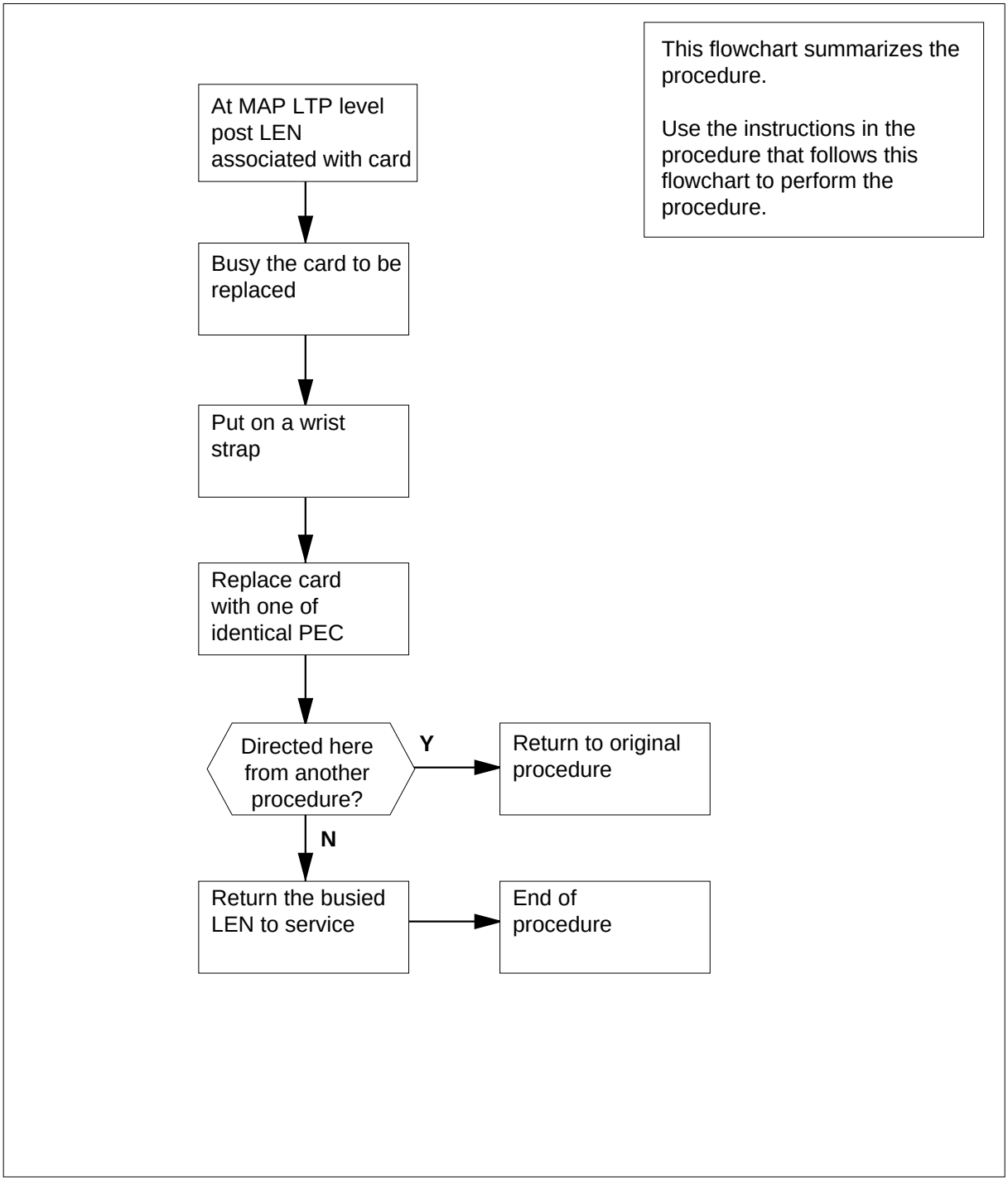

Replacing an NT6X18 card in RSC-S LCME

At the MAP

1 Proceed only if you have been directed to this card replacement procedure from a step in a maintenance procedure, are using the procedure for verifying or accepting cards, or have been directed to this procedure by your maintenance support group.

2 Obtain a replacement card. Ensure the replacement card has the same product equipment code (PEC), including suffix, as the card that is to be removed.

At the MAP terminal

3 Post the LEN of the card to be replaced by typing

```
>mapci;mtc;lns;ltp;post l site lcme_no unit_no lsg_no ckt_no
```

and pressing the Enter key.

where

site
is the location name of the LCME with the faulty card

lcme_no
is the number of the LCME with the faulty card

unit_no
is the number of the LCME unit with the faulty card

lsg_no
is the number of the LSG with the faulty card

ckt_no
is the number of the circuit associated with the faulty card

Example of a MAP display:

NT6X18
in an RSC-S (DS-1) Model A LCME (continued)

```
 CM    MS    IOD    Net    PM    CCS    LNS    Trks    Ext    Appl
 .      .     .       .     .      .       .      .       .      .

LTP
 0 Quit   Post       DELQ       BUSYQ        PREFIX
 2 Post_
 3        LCC PTY RNG....LEN......    DN   STA F S LTA TE RESULT
 4        CKT TYPE FL    HOST 00 0 03 03  NO DIRN  IDL
 5 BSY
 6 RTS
 7 DIAG
 8
 9 AIMStat
10 CKTLOC
11 Hold
12 Next_
13
14
15
16 Prefix
17 LCO
18 Level
```

4 Busy the NT6X18 line card by typing

>BSY

and pressing the Enter key.

Example of a MAP display:

```
 CM    MS    IOD    Net    PM    CCS    LNS    Trks    Ext    Appl
 .      .      .      .     .      .      .       .      .      .

LTP
 0 Quit    Post       DELQ       BUSYQ        PREFIX
 2 Post_
 3         LCC PTY RNG....LEN......  DN     STA F S LTA TE RESULT
 4         CDF FL    HOST 00 0 03 03 4931082 MB
 5 BSY
 6 RTS
 7 DIAG
 8
 9 AIMStat
10 CKTLOC
11 Hold
12 Next_
13
14
15
16 Prefix
17 LCO
18 Level
```

NT6X18
in an RSC-S (DS-1) Model A LCME (continued)

At the LCE frame

5

WARNING
Card damage—transport
Take these precautions to protect the circuit cards from electrical and mechanical damage while transporting cards.

When handling a circuit card not in an electrostatic discharge (ESD) protective container, stand on a conductive floor mat and wear a wrist strap connected, through a 1-megohm resistor, to a suitably grounded object, such as a metal workbench or a DMS switch frame.

Store and transport circuit cards in an ESD protective container.

DANGER
Equipment damage
Take these precautions when removing or inserting a card:

1. Do not apply direct pressure to the components.
2. Do not force the card into the slot.

Put on a wrist strap.

6

DANGER
Hot materials
Exercise care when handling the line card. The line feed resistor may be very hot.

CAUTION
Special tools required
Card shrouds and removal tools are required for removing cards from the line drawers.

NT6X18
in an RSC-S (DS-1) Model A LCME (continued)

Descriptions of these shrouds follow.

Line card insertion / withdrawal tool for	Apparatus code	Common product code
3-inch cards	QTH56A	A0298291
6-inch cards	QTH58A	A0313317

Note: Card removal tools are required for removing cards from line drawers. Two sizes are available. Descriptions of these tools follow.

Card removal tool for	Apparatus code	Common product code
3—4 inch cards	QTH57A	A0298292
Note: For 4-inch or larger cards, use the large grip tool ITA9953.		

Remove the faulty card by opening the line drawer that was determined in step 1 and following these substeps:

a Face the drawer shelf and grasp the handle at the bottom of the drawer with your right hand.

b Push up on the drawer latch with your thumb and pull out the drawer until fully withdrawn. It is fully withdrawn when the drawer stop, at the top, prevents further travel.

c Maintain a slight pull on the handle and lift the faceplate of the drawer approximately 2.5 cm (1 in).

d While holding the drawer in this position push the bottom of the drawer, nearest the shelf with your left hand to a position about 1 cm (.5 in) to the right.

e Hold the drawer in this position with your left hand and lower the faceplate of the drawer by releasing the grip of your right hand.

f Ensure a card shroud and line card extractor are available.

7 Remove the line card to be replaced by using the following substeps:

a Slide a card shroud over the card to be removed and an adjacent card. If there is not an adjacent card on either side, do not use the card shroud.

b Grasp the edge of the card with a line card extractor at a point midway between the top and bottom edges. Hold the extractor in your right hand.

c Squeeze the handles of the extractor together to grasp the card tightly.

NT6X18
in an RSC-S (DS-1) Model A LCME (continued)

d Hold the front cover of the line drawer to steady it using your left hand.

e Pull the extractor away from the drawer, and the card will become unplugged from its socket on the drawer backplane.

f Continue pulling the card with the extractor until the card is clear of the shroud.

g Insert the card removed into the ESD container and store using local procedures.

8 Replace the faulty card using the following substeps:

a Remove the replacement card from the ESD container.

b Slide the card in the shroud guide slots toward the drawer backplane.

c Hold the front cover of the line drawer with your left hand to steady it.

d Grasp the top and bottom edges of the card with the fingers of your right hand.

e Push the card toward the backplane until it plugs fully into the backplane socket.

9 Use the following information to determine where to proceed.

If you entered this procedure from	Do
alarm clearing procedures	step 14
other	step 10

At the MAP terminal

10 Test the NT6X18 line card by typing

```
>DIAG
```

and pressing the Enter key.

If DIAG	Do
passed	step 11
failed	step 14

Note: If the suffix of the NT6X18 card is AA or AB, and the line is identified as ground start (GND=Y in table LNINV), rerun diagnostics if the initial diagnostics fails. This action is possible by adding service order (SERVORD) option NPGD (negate partial ground start diagnostics). This option allows the line to be tested against a smaller subset of ground start diagnostics. Therefore, when option NPGD is set in table LENLINES, loop detector, reversal relay, and ground start relay are omitted. For more information about SERVORD and NPGD, refer to the *XPM Translations Guide*.

NT6X18 in an RSC-S (DS-1) Model A LCME (end)

11

ATTENTION

There is a new diagnostics test for NT6X18AA/AB cards. This NT6X18 card may be good. See the notes on line cards in the general maintenance section of this book for information on running an enhanced diagnostics.

Return the NT6X18 card to service by typing

>RTS

and pressing the Enter key.

If RTS	Do
passed	step 12
failed	step 13

12 Send any faulty cards for repair according to local procedure.

13 Record the date the card was replaced, the serial number of the card, and the symptoms that prompted replacement of the card. Go to step 16.

14 Return the procedure that directed you to this procedure. At the point where a faulty card list was produced, identify the next faulty card on the list and go to the appropriate card replacement procedure for that card in this manual.

15 Obtain further assistance in replacing this card by contacting operating company maintenance personnel.

16 You have successfully completed this procedure. Return to the maintenance procedure that directed you to this card replacement procedure and continue as directed.

NT6X18 in an RSC-S (DS-1) Model B LCME

Application

Use this procedure to replace an NT6X18 card in an RSC-S LCME.

PEC	Suffixes	Name
NT6X18	AA, AB	Line Card Type B (Coin/Ground Start)
NT6X18	BA	World Line Card Type B

The NT6X18BA World Line Card Type B replaces the following cards:

- NT6X18AA, North America
- NT6X94AB, Turkey, Belize, Guyana
- NT6X94BB, Caribbean
- NT6X94CA, China
- NT6X94DA, Morocco
- NT6X33AA, Japan Type A

Common procedures

None

Action

The following flowchart is only a summary of the procedure. To replace the card, use the instructions in the procedure that follows the flowchart.

NT6X18
in an RSC-S (DS-1) Model B LCME (continued)

Summary of card replacement procedure for an NT6X18 card in RSC-S LCME

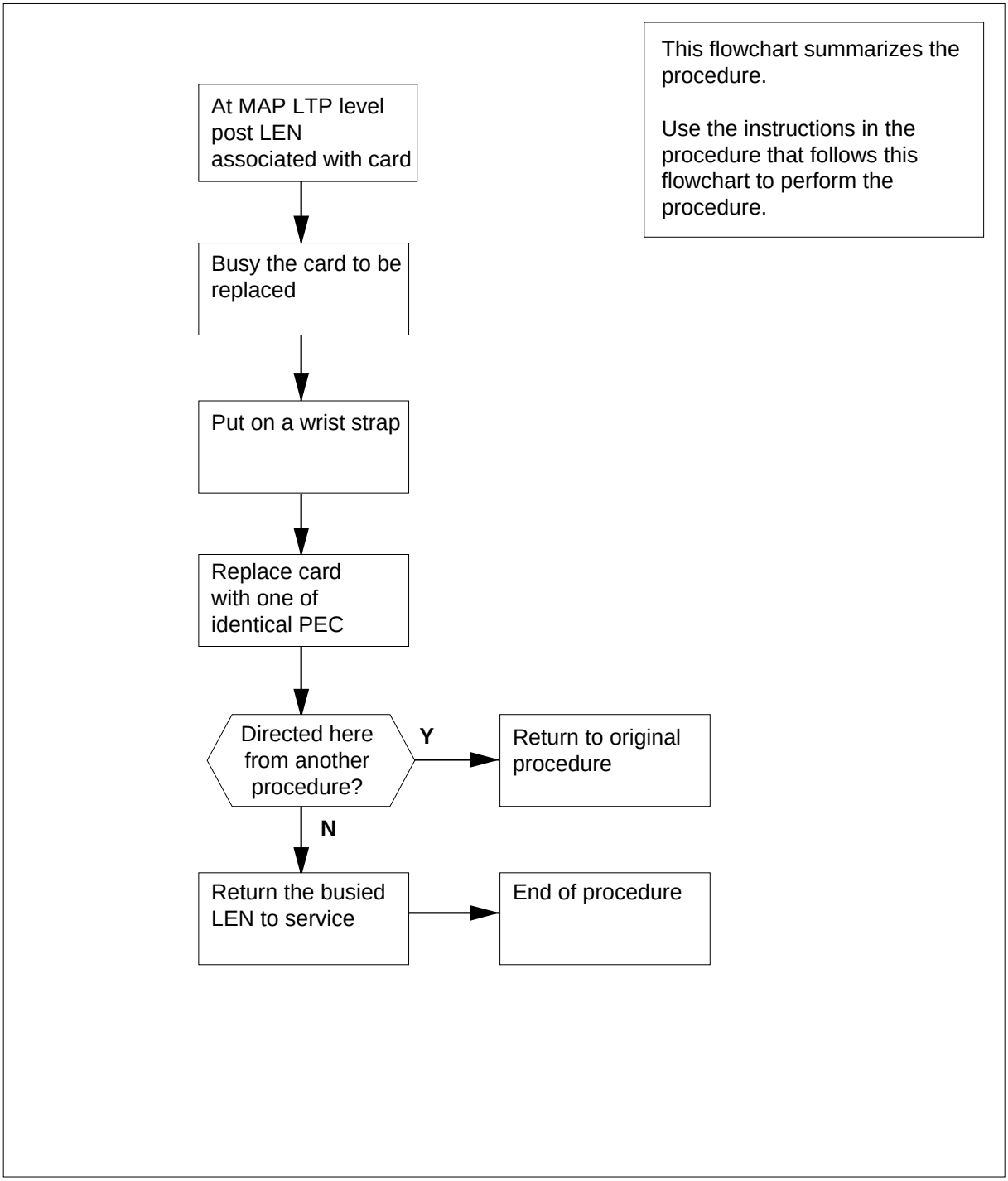

NT6X18 in an RSC-S (DS-1) Model B LCME (continued)

Replacing an NT6X18 card in RSC-S LCME

At the MAP

1 Proceed only if you have been directed to this card replacement procedure from a step in a maintenance procedure, are using the procedure for verifying or accepting cards, or have been directed to this procedure by your maintenance support group.

2 Obtain a replacement card. Ensure the replacement card has the same product equipment code (PEC), including suffix, as the card that is to be removed.

At the MAP terminal

3 Post the LEN of the card to be replaced by typing

```
>mapci;mtc;lns;ltp;post l site lcme_no unit_no lsg_no ckt_no
```

and pressing the Enter key.

where

site
is the location name of the LCME with the faulty card

lcme_no
is the number of the LCME with the faulty card

unit_no
is the number of the LCME unit with the faulty card

lsg_no
is the number of the LSG with the faulty card

ckt_no
is the number of the circuit associated with the faulty card

Example of a MAP display:

NT6X18
in an RSC-S (DS-1) Model B LCME (continued)

```
 CM    MS    IOD    Net    PM    CCS    LNS    Trks    Ext    Appl
 .      .     .       .     .      .       .      .       .      .

LTP
 0 Quit   Post       DELQ       BUSYQ        PREFIX
 2 Post_
 3        LCC PTY RNG....LEN......    DN   STA F S LTA TE RESULT
 4        CKT TYPE FL    HOST 00 0 03 03  NO DIRN  IDL
 5 BSY
 6 RTS
 7 DIAG
 8
 9 AIMStat
10 CKTLOC
11 Hold
12 Next_
13
14
15
16 Prefix
17 LCO
18 Level
```

4 Busy the NT6X18 line card by typing

>BSY

and pressing the Enter key.

Example of a MAP display:

```
 CM    MS    IOD    Net    PM    CCS    LNS    Trks    Ext    Appl
 .      .      .      .     .      .      .       .      .      .

LTP
 0 Quit    Post       DELQ       BUSYQ        PREFIX
 2 Post_
 3         LCC PTY RNG....LEN......  DN     STA F S LTA TE RESULT
 4         CDF FL    HOST 00 0 03 03 4931082 MB
 5 BSY
 6 RTS
 7 DIAG
 8
 9 AIMStat
10 CKTLOC
11 Hold
12 Next_
13
14
15
16 Prefix
17 LCO
18 Level
```

NT6X18
in an RSC-S (DS-1) Model B LCME (continued)

At the LCE frame

5

WARNING
Card damage—transport
Take these precautions to protect the circuit cards from electrical and mechanical damage while transporting cards.

When handling a circuit card not in an electrostatic discharge (ESD) protective container, stand on a conductive floor mat and wear a wrist strap connected, through a 1-megohm resistor, to a suitably grounded object, such as a metal workbench or a DMS switch frame.

Store and transport circuit cards in an ESD protective container.

DANGER
Equipment damage
Take these precautions when removing or inserting a card:

1. Do not apply direct pressure to the components.
2. Do not force the card into the slot.

Put on a wrist strap.

6

DANGER
Hot materials
Exercise care when handling the line card. The line feed resistor may be very hot.

CAUTION
Special tools required
Card shrouds and removal tools are required for removing cards from the line drawers.

NT6X18
in an RSC-S (DS-1) Model B LCME (continued)

Descriptions of these shrouds follow.

Line card insertion / withdrawal tool for	Apparatus code	Common product code
3-inch cards	QTH56A	A0298291
6-inch cards	QTH58A	A0313317

Note: Card removal tools are required for removing cards from line drawers. Two sizes are available. Descriptions of these tools follow.

Card removal tool for	Apparatus code	Common product code
3-4 inch cards	QTH57A	A0298292
Note: For 4-inch or larger cards, use the large grip tool ITA9953.		

Remove the faulty card by opening the line drawer that was determined instep 1 and following these substeps:

a Face the drawer shelf and grasp the handle at the bottom of the drawer with your right hand.

b Push up on the drawer latch with your thumb and pull out the drawer until fully withdrawn. It is fully withdrawn when the drawer stop, at the top, prevents further travel.

c Maintain a slight pull on the handle and lift the faceplate of the drawer approximately 2.5 cm (1 in).

d While holding the drawer in this position push the bottom of the drawer, nearest the shelf with your left hand to a position about 1 cm (.5 in) to the right.

e Hold the drawer in this position with your left hand and lower the faceplate of the drawer by releasing the grip of your right hand.

f Ensure a card shroud and line card extractor are available.

7 Remove the line card to be replaced by using the following substeps:

a Slide a card shroud over the card to be removed and an adjacent card. If there is not an adjacent card on either side, do not use the card shroud.

b Grasp the edge of the card with a line card extractor at a point midway between the top and bottom edges. Hold the extractor in your right hand.

c Squeeze the handles of the extractor together to grasp the card tightly.

d Hold the front cover of the line drawer to steady it using your left hand.

e Pull the extractor away from the drawer, and the card will become unplugged from its socket on the drawer backplane.

NT6X18 in an RSC-S (DS-1) Model B LCME (continued)

f Continue pulling the card with the extractor until the card is clear of the shroud.

g Insert the card removed into the ESD container and store using local procedures.

8 Replace the faulty card using the following substeps:

a Remove the replacement card from the ESD container.

b Slide the card in the shroud guide slots toward the drawer backplane.

c Hold the front cover of the line drawer with your left hand to steady it.

d Grasp the top and bottom edges of the card with the fingers of your right hand.

e Push the card toward the backplane until it plugs fully into the backplane socket.

9 Use the following information to determine where to proceed.

If you entered this procedure from	Do
alarm clearing procedures	step 14
other	step 10

At the MAP terminal

10

ATTENTION
There is a new diagnostics test for NT6X18AA/AB cards. This NT6X18 card may be good. See the notes on line cards in the general maintenance section of this book for information on running an enhanced diagnostics.

Test the NT6X18 line card by typing

```
>DIAG
```

and pressing the Enter key.

If DIAG	Do
passed	step 11
failed	step 14

Note: If the suffix of the NT6X18 card is AA or AB, and the line is identified as ground start (GND=Y in table LNINV), rerun diagnostics if the initial diagnostics fails. This action is possible by adding service order (SERVORD) option NPGD (negate partial ground start diagnostics). This option allows the line to be tested against a smaller subset of ground start

NT6X18 in an RSC-S (DS-1) Model B LCME (end)

diagnostics. Therefore, when option NPGD is set in table LENLINES, loop detector, reversal relay, and ground start relay are omitted. For more information about SERVORD and NPGD, refer to the *XPM Translations Guide*.

11 Return the NT6X18 card to service by typing

>RTS

and pressing the Enter key.

If RTS	Do
passed	step 12
failed	step 13

12 Send any faulty cards for repair according to local procedure.

13 Record the date the card was replaced, the serial number of the card, and the symptoms that prompted replacement of the card. Go to step 16.

14 Return the procedure that directed you to this procedure. At the point where a faulty card list was produced, identify the next faulty card on the list and go to the appropriate card replacement procedure for that card in this manual.

15 Obtain further assistance in replacing this card by contacting operating company maintenance personnel.

16 You have successfully completed this procedure. Return to the maintenance procedure that directed you to this card replacement procedure and continue as directed.

NT6X18 in a STAR or RLD

Application

Use this procedure to replace the following card in a STAR or remote line drawer (RLD).

PEC	Suffixes	Name
NT6X18	AA, AB	Line Card Type B (Coin/Ground Start)
NT6X18	BA	World Line Card Type B

Common procedures

The common replacing a line card procedure is referenced in this procedure.

Action

The following flowchart is a summary of the procedure. To replace the card, use the instructions in the procedure that follows the flowchart.

NT6X18 in a STAR or RLD (continued)

Summary of replacing an NT6X18 card in a STAR or RLD

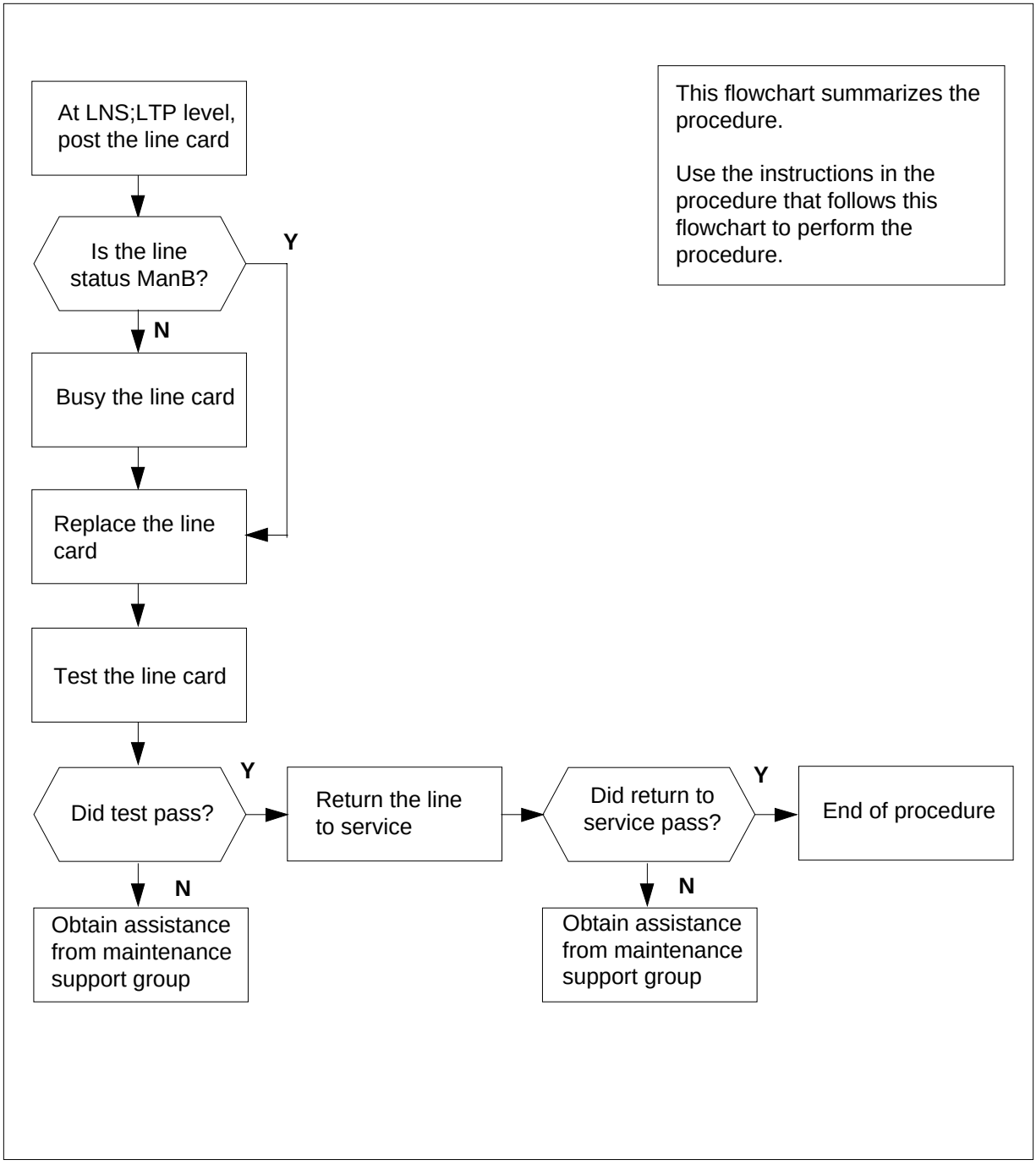

NT6X18 in a STAR or RLD (continued)

Replacing an NT6X18 card in a STAR or RLD

At your current location

1 Get a replacement card. Ensure the replacement card has the same product equipment code (PEC), including suffix, as the card that is to be removed.

At the MAP terminal

2 To access the LTP level of the MAP and post the line associated with the card to be replaced, type

`>MAPCI;MTC;LNS;LTP;POST L site frame unit lsg ckt`

and press the Enter key.

where

site
is the name of the site where the STAR is located

frame
is the number of the STAR with the faulty card

unit
is 0 for the STAR

lsg
is the number of the line subgroup with the faulty card (0-35)

ckt
is the number of the circuit associated with the faulty card (0-31)

Example of a MAP response:

```
LCC PTY RNG .....LEN.........  DN   STA F S LTA TE RESULT
RES          REM1 00 0 03 03   7213355 MB
```

3 Check the status of the posted line.

If the line status is	Do
manual busy (ManB)	step 5
not ManB	step 4

4 To busy the line, type

`>BSY`

and press the Enter key.

5 Go to the common replacing a line card procedure in this document. When you have completed the procedure, return to this point.

NT6X18 in a STAR or RLD (end)

At the MAP terminal

6

> **ATTENTION**
> There is an enhanced diagnostics test for NT6X18AA and NT6XAB cards. This NT6X18 card may be good. See the description of the NT6X18 line card in the “Star Remote System hardware" chapter in this manual for information on enhanced diagnostics.

To test the line card just replaced, type

>DIAG

and press the Enter key.

If DIAG	Do
passes	step 7
fails	step 10

7 To return the line card to service, type

>RTS

and press the Enter key.

If RTS	Do
passes	step 8
fails	step 10

8 Send any faulty cards for repair according to local procedure.

9 Record the following items in office records:

- date the card was replaced
- serial number of the card
- indications that prompted replacement of the card

Go to step 11.

10 Get additional help in replacing this card by contacting the personnel responsible for a higher level of support.

11 You have correctly completed this procedure.

NT6X19 in an IOPAC ILCM

Application

Use this procedure to replace the following card in an International line concentrating module (ILCM).

PEC	Suffixes	Name
NT6X19	AA	Message waiting line card

Common procedures

The common replacing a line card procedure is referenced in this procedure.

Action

The following flowchart is only a summary of the procedure. To replace the card, use the instructions in the step-action procedure that follows the flowchart.

NT6X19
in an IOPAC ILCM (continued)

Summary of card replacement procedure for NT6X19 card in an ILCM

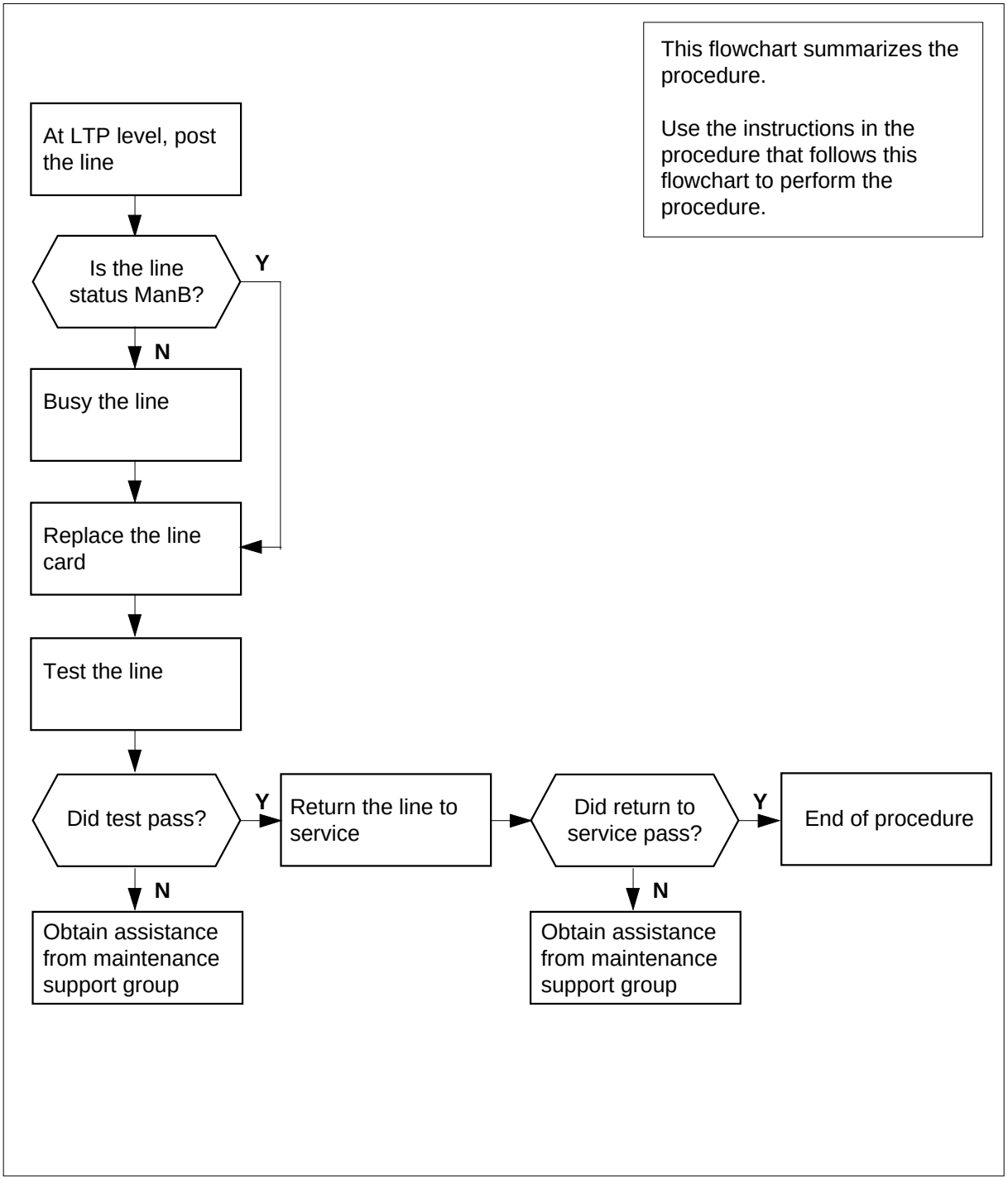

Replacing an NT6X19 in an ILCM

At your Current Location

1 Obtain a replacement card. Ensure the replacement card has the same product equipment code (PEC), including suffix, as the card that is to be removed.

At the MAP terminal

2 Access the line test position (LTP) level of the MAP terminal and post the line associated with the card to be replaced by typing

`>MAPCI;MTC;LNS;LTP;POST L site lcm lsg ckt`

and pressing the Enter key.

where

site
is the name of the site where the IOPAC is located

lcm
is the number of the ILCM with the faulty card

lsg
is the number of the line subgroup with the faulty card

ckt
is the number of the circuit associated with the faulty card

Example of a MAP response:

```
LCC PTY RNG .....LEN........  DN   STA F S LTA TE RESULT
1FR      REM1 00 0 03 03   7213355
```

3 Check the status of the posted line.

If the line status is	Do
manual busy (ManB)	step 5
not ManB	step 4

4 Busy the line by typing

`>BSY`

and pressing the Enter key.

At the IOPAC cabinet

5 Go to thecommon replacing a line card procedure in this document. When you have completed the procedure, return to this step.

NT6X19 in an IOPAC ILCM (end)

At the MAP terminal

6 Test the line card just replaced by typing

>DIAG

and pressing the Enter key.

If the DIAG	Do
passed	step 7
failed	step 10

7 Return the line card to service by typing

>RTS

and pressing the Enter key.

If RTS	Do
passed	step 8
failed	step 10

8 Send any faulty cards for repair according to local procedure.

9 Record the following items in office records:

- date the card was replaced
- serial number of the card
- symptoms that prompted replacement of the card

Go to step 11.

10 Obtain further assistance in replacing this card by contacting the personnel responsible for higher level of support.

11 You have successfully completed this procedure.

NT6X19 in an OPM

Application

Use this procedure to replace the following card in an OPM.

PEC	Suffixes	Name
NT6X19	AA	Message Waiting Line Card

Common procedures

The common replacing a line card procedure is referenced in this procedure.

Action

The following flowchart is a summary of the procedure. To replace the card, use the instructions in the procedure that follows the flowchart.

NT6X19
in an OPM (continued)

Summary of replacing an NT6X19 card in an OPM

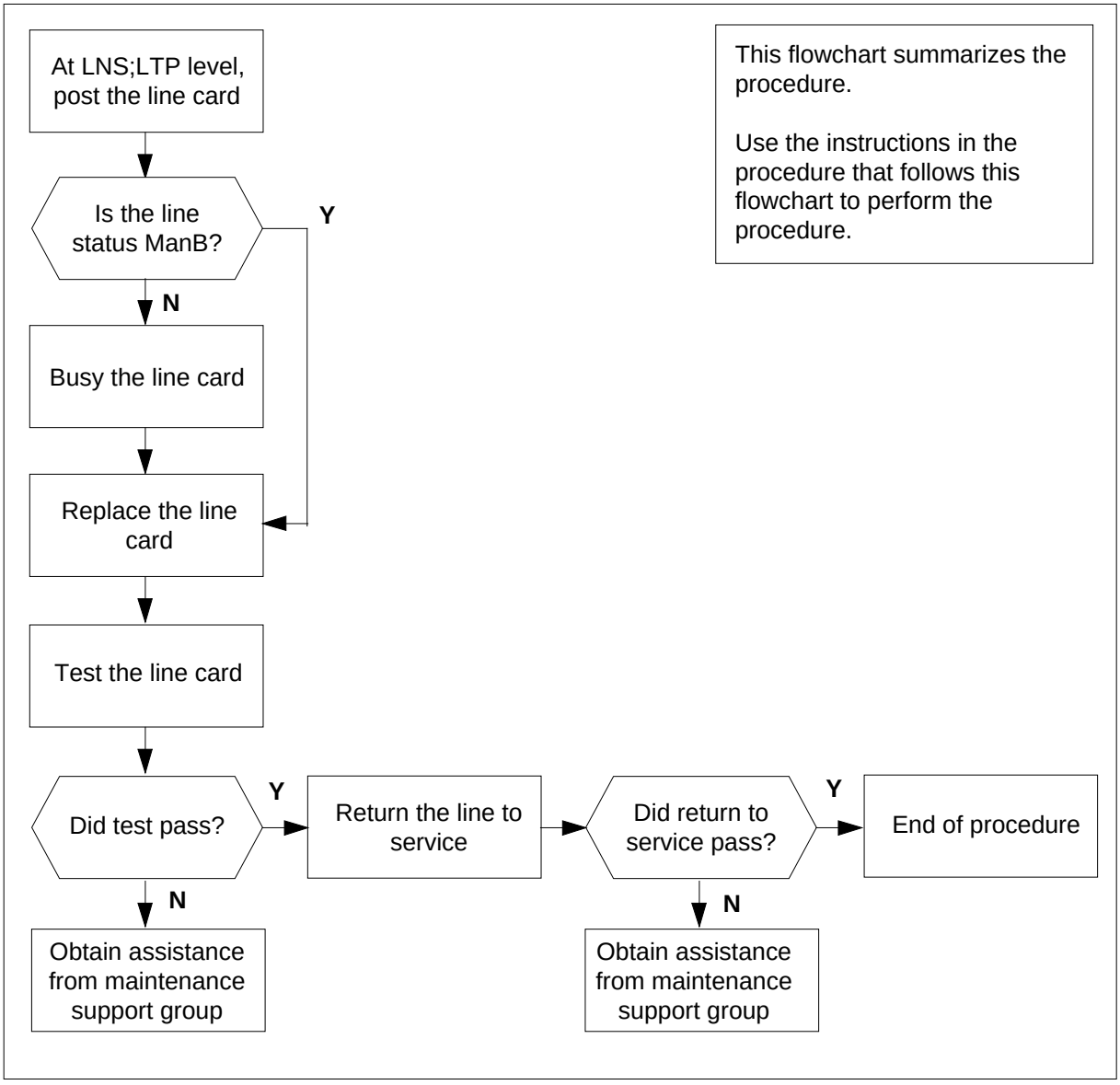

Replacing an NT6X19 card in an OPM

At your current location

1 Obtain a replacement card. Ensure that the replacement card has the same product equipment code (PEC), including suffix, as the card that is to be removed.

At the MAP terminal

2 Access the LTP level of the MAP and post the line associated with the card to be replaced by typing

`>MAPCI;MTC;LNS;LTP;POST L site lcm lsg ckt`

and pressing the Enter key.

where

site
is the name of the site where the OPM is located

lcm
is the number of the OPM with the faulty card

lsg
is the number of the line subgroup with the faulty card

ckt
is the number of the circuit associated with the faulty card

Example of a MAP response:

```
LCC PTY RNG .....LEN.......... DN   STA F S LTA TE RESULT
1FR      REM1 00 0 03 03     7213355 MB
```

3 Check the status of the posted line.

If the line status is	Do
manual busy (ManB)	step 5
not ManB	step 4

4 Busy the line by typing

`>BSY`

and pressing the Enter key.

5 Go to the common replacing a line card procedure in this document. When you have completed the procedure, return to this point.

NT6X19 in an OPM (end)

At the MAP terminal

6 Test the line card just replaced by typing

`>DIAG`

and pressing the Enter key.

If DIAG	Do
passed	step 7
failed	step 10

7 Return the line card to service by typing

`>RTS`

and pressing the Enter key.

If RTS	Do
passed	step 8
failed	step 10

8 Send any faulty cards for repair according to local procedure.

9 Record the following items in office records:

- date the card was replaced
- serial number of the card
- symptoms that prompted replacement of the card

Go to step 11.

10 Obtain further assistance in replacing this card by contacting the personnel responsible for higher level of support.

11 You have successfully completed this procedure.

NT6X19 in an RLCM

Application

Use this procedure to replace the following card in an RLCM.

PEC	Suffixes	Name
NT6X19	AA	Message Waiting Line Card

Common procedures

The common replacing a line card procedure is referenced in this procedure.

Action

The following flowchart is a summary of the procedure. To replace the card, use the instructions in the procedure that follows the flowchart.

NT6X19
in an RLCM (continued)

Summary of replacing an NT6X19 card in an RLCM

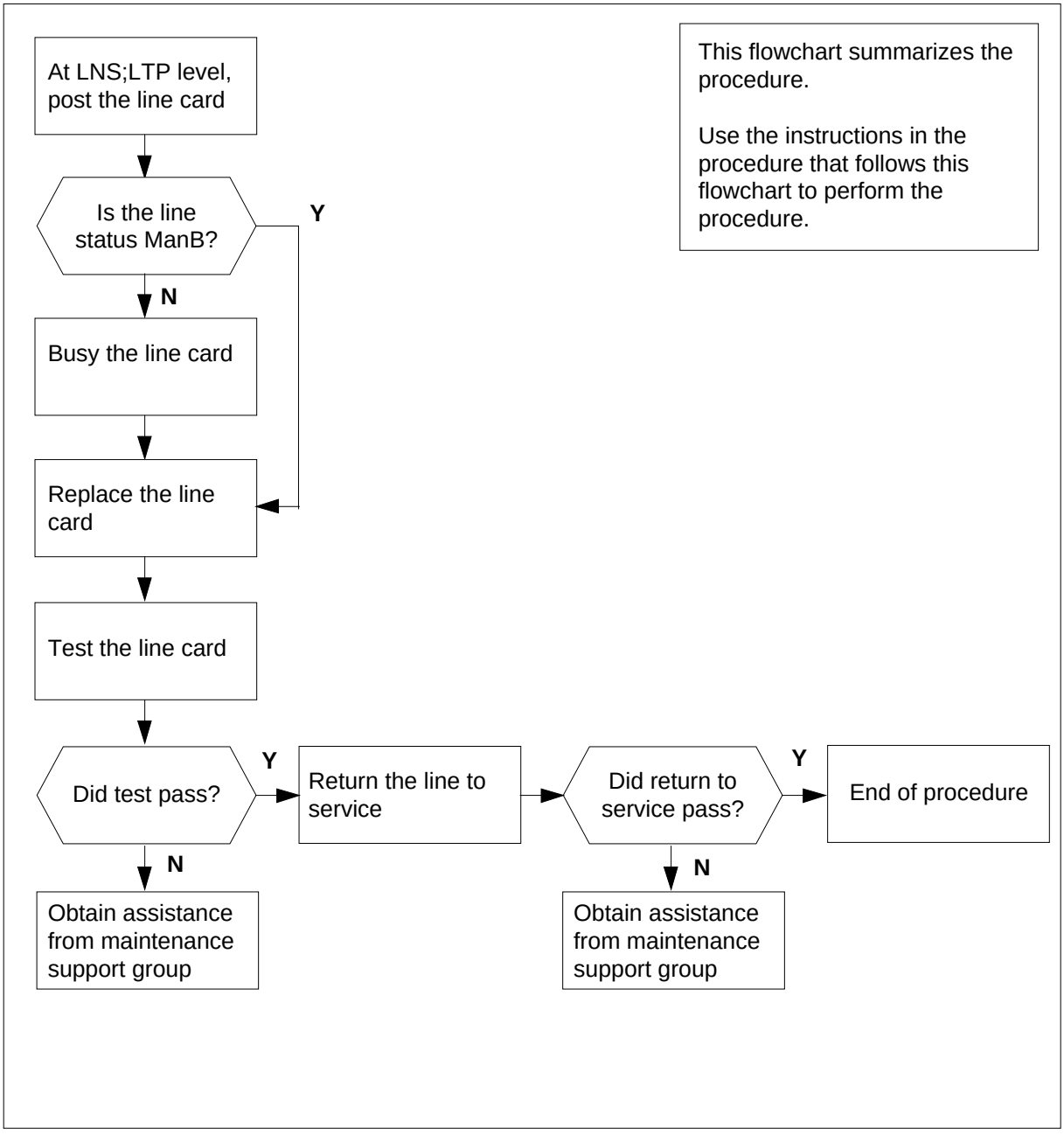

Replacing an NT6X19 card in an RLCM

At your current location

1 Obtain a replacement card. Ensure that the replacement card has the same product equipment code (PEC), including suffix, as the card that is to be removed.

At the MAP terminal

2 Access the LTP level of the MAP and post the line associated with the card to be replaced by typing

`>MAPCI;MTC;LNS;LTP;POST L site lcm lsg ckt`

and pressing the Enter key.

where

site
is the name of the site where the RLCM is located

lcm
is the number of the RLCM with the faulty card

lsg
is the number of the line subgroup with the faulty card

ckt
is the number of the circuit associated with the faulty card

Example of a MAP response:

```
LCC PTY RNG .....LEN.......... DN   STA F S LTA TE RESULT
1FR      REM1 00 0 03 03     7213355 MB
```

3 Check the status of the posted line.

If the line status is	Do
manual busy (ManB)	step 5
not ManB	step 4

4 Busy the line by typing

`>BSY`

and pressing the Enter key.

5 Go to the common replacing a line card procedure in this document. When you have completed the procedure, return to this point.

NT6X19 in an RLCM (end)

At the MAP terminal

6 Test the line card just replaced by typing

`>DIAG`

and pressing the Enter key.

If DIAG	Do
passed	step 7
failed	step 10

7 Return the line card to service by typing

`>RTS`

and pressing the Enter key.

If RTS	Do
passed	step 8
failed	step 10

8 Send any faulty cards for repair according to local procedure.

9 Record the following items in office records:

- date the card was replaced
- serial number of the card
- symptoms that prompted replacement of the card

Go to step 11.

10 Obtain further assistance in replacing this card by contacting the personnel responsible for higher level of support.

11 You have successfully completed this procedure.

NT6X19 in an RSC LCM

Application

Use this procedure to replace the following card in an RSC LCM.

PEC	Suffixes	Name
NT6X19	AA, AB	Message waiting line circuit

Common procedures

None

Action

The following flowchart is a summary of the procedure. To replace the card, use the instructions in the procedure that follows the flowchart.

NT6X19
in an RSC LCM (continued)

Summary of card replacement procedure for NT6X19 card in an RSC LCM

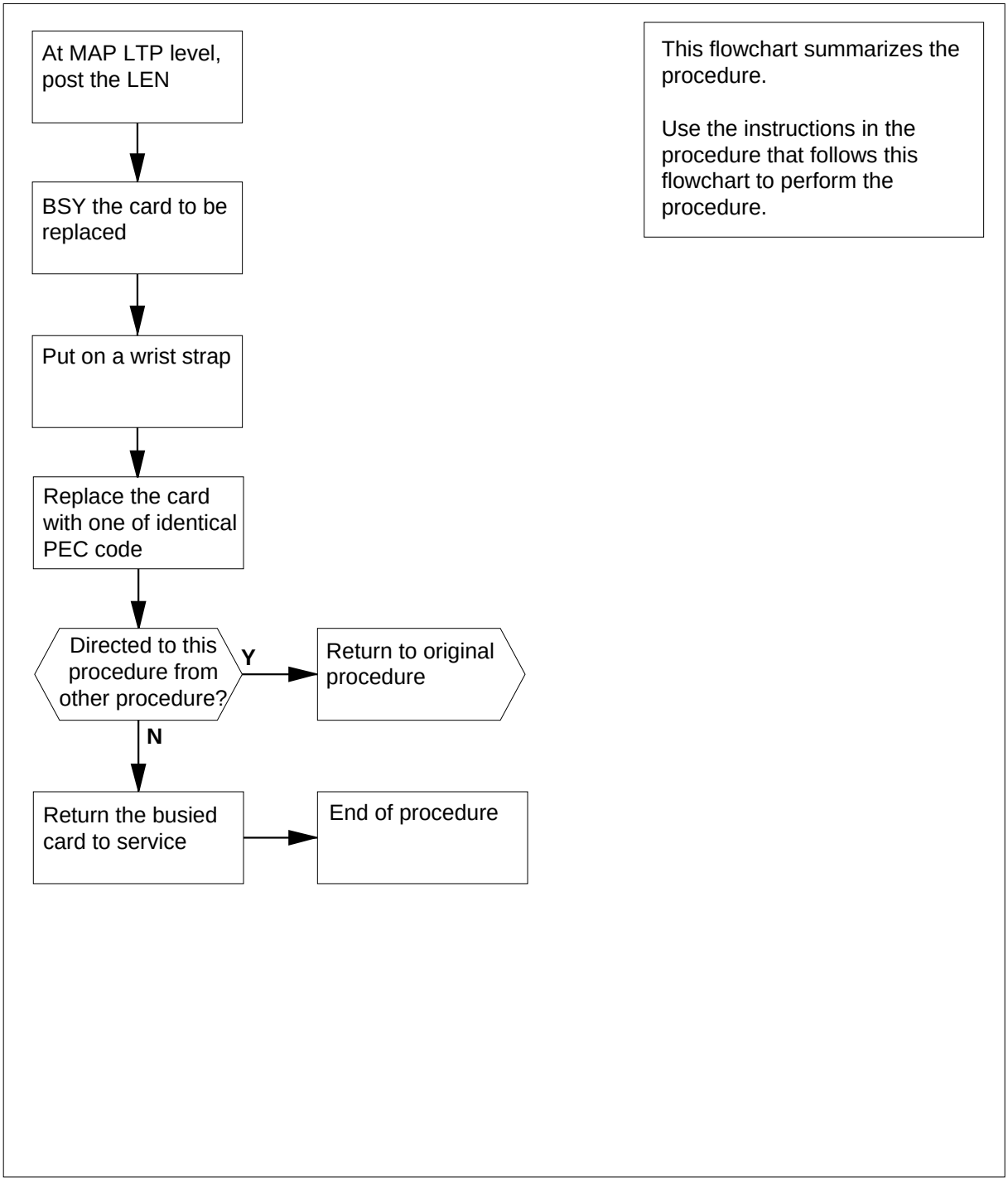

Replacing an NT6X19 card in an RSC LCM

At your Current Location

1 Proceed only if you were either directed to this card replacement procedure from a step in a maintenance procedure, are using the procedure for verifying or accepting cards, or were directed to this procedure by your maintenance support group.

2 Obtain a replacement card. Ensure the replacement card has the same product equipment code (PEC) including suffix, as the card that is to be removed.

At the MAP terminal

3 Post the LEN of the card to be replaced by typing

```
>MAPCI;MTC;LNS;LTP;POST L site lcm_no lsg_no ckt_no
```

and pressing the Enter key.

where

site
is the site name given to the remote location

lcm_no
is the number of the LCM with the faulty card

lsg_no
is the number of the LSG with the faulty card

ckt_no
is the number of the circuit associated with the faulty card

Example of a MAP display:

NT6X19
in an RSC LCM (continued)

```
 CM    MS    IOD    Net    PM     CCS     LNS   Trks    Ext    Appl
  .     .     .      .      .      .       .      .      .       .
LTP
 0 Quit       Post       DELQ       BUSYQ        PREFIX
 2 Post_
 3          LCC PTY RNG....LEN......DN     STA  F  S  LTA  TE RESULT
      CKT TYPE FL REM1 00 0 03 03 4931082 IDL
 5 BSY
 6 RTS
 7 DIAG
 8
 9 AIMStat
10 CKTLOC
11 Hold
12 Next_
13
14
15
16 Prefix
17 LCO
18 Level
```

4 Busy the NT6X19 line card by typing

>BSY

and pressing the Enter key.

Example of a MAP display:

```
 CM    MS    IOD    Net    PM     CCS     LNS   Trks    Ext    Appl
  .     .     .      .      .      .       .      .      .       .
LTP
 0 Quit       Post       DELQ       BUSYQ        PREFIX
 2 Post_
 3          LCC PTY RNG....LEN......DN     STA  F  S  LTA  TE RESULT
      CKT TYPE FL REM1 00 0 03 03 4931082 MB
 5 BSY
 6 RTS
 7 DIAG
 8
 9 AIMStat
10 CKTLOC
11 Hold
12 Next_
13
14
15
16 Prefix
17 LCO
18 Level
```

NT6X19
in an RSC LCM (continued)

At the LCE frame

5

WARNING
Card damage—transport
Take the following precautions to protect circuit cards from electrical and mechanical damage when transporting them:

When handling a circuit card not in an electrostatic discharge (ESD) protective container, stand on a conductive floor mat and wear a wrist strap connected, through a 1-megohm resistor, to a suitably grounded object, such as a metal workbench or a DMS frame (Northern Telecom Corporate Standard 5028).

Store and transport circuit cards in an ESD protective container.

WARNING
Static electricity damage
Before removing any cards, put on a wrist strap and connect it to the wrist strap grounding point on the left side of the frame supervisory panel of the LCM. This protects the equipment against damage caused by static electricity.

DANGER
Equipment damage
Take these precautions when removing or inserting a card:

1. Do not apply direct pressure to the components.
2. Do not force the cards into the slots.

CAUTION
Special tools required
Card shrouds and removal tools are required for removing cards from the line drawers. For descriptions of these tools, refer to the notes at the end of this procedure.

Put on a wrist strap.

NT6X19 in an RSC LCM (continued)

6

DANGER
Hot materials
Exercise care when handling the line card. The line feed resistor may be hot.

Open the line drawer using the following steps:

a Face the drawer shelf and grasp the handle at the bottom of the drawer with your right hand.

b Push up on the drawer latch with your thumb and pull the drawer out until fully withdrawn. It is fully withdrawn when the drawer stop at the top, to prevent further travel.

c Maintain a slight pull on the handle and lift the faceplate of the drawer approximately 2.5 cm (1 inch).

d While holding the drawer in this position, push the bottom of the drawer nearest the shelf with your left hand, to a position about one 1 cm (.5 inch) to the right.

e Hold the drawer in this position with your left hand and lower the faceplate of the drawer by releasing the grip of your right hand.

f Ensure a card shroud and line card extractor are available.

Note: Card shrouds are required for inserting or removing cards in line drawers. Two sizes are available for use with 3-inch and 6-inch cards, as shown in the following table.

Line card insertion / withdrawal tool for	Apparatus code	Common product code
3-inch cards	QTH56A	A0298291
6-inch cards	QTH58A	A0313317

Note: Card removal tools are required for removing cards from line drawers. Two sizes are available, as shown in the following table.

Card removal tool for	Apparatus code	Common product code
3—4 inch cards	QTH57A	A0298292
Note: For 4-inch or larger cards, use the large grip tool ITA9953.		

NT6X19 in an RSC LCM (continued)

7 Remove the line card to be replaced by using the following steps:

a Slide a card shroud over the card to be removed and an adjacent card. If there is not an adjacent card on either side, do not use the card shroud.

b Grasp the edge of the card with a line card extractor at a point midway between the top and bottom edges. Hold the extractor in your right hand.

c Squeeze the handles of the extractor together to grasp the card tightly.

d Hold the front cover of the line drawer to steady it with your left hand.

e Pull the extractor away from the drawer and the card will come unplugged from its socket on the drawer backplane.

f Continue pulling the card with the extractor until the card is clear of the shroud.

g Insert the removed card into an ESD container and store per local procedures.

8 Replace the faulty card by using the following steps:

a Remove the replacement card from the ESD container.

b Slide the card in the shroud guide slots towards the drawer backplane.

c Hold the front cover of the line drawer with your left hand to steady it.

d Grasp the top and bottom edges of the card with the fingers of your righ hand.

e Push the card towards the backplane until it plugs fully into the backplane socket.

9 Use the following information to determine the next step in this procedure.

If you entered this procedure from	Do
an alarm clearing procedure	step14
other	step10

At the MAP terminal

10 Test the NT6X19 line card by typing

>DIAG

and pressing the Enter key.

If DIAG	Do
passed	step11
failed	step14

11 Return the NT6X19 card to service by typing

>RTS

NT6X19
in an RSC LCM (end)

and pressing the Enter key.

If RTS	Do
passed	step12
failed	step 15

12 Send any faulty cards for repair according to local procedure.

13 Record the following items in office records:

- date the card was replaced
- serial number of the card
- symptoms that prompted replacement of card

Go to step 16.

14 Return to the *Alarm Clearing Procedures* that directed you to this procedure. At the point where the faulty card list was produced, identify the next faulty card on the list and go to the appropriate card replacement procedure for that card in this manual.

15 Obtain further assistance in replacing this card by contacting personnel responsible for a higher level of support.

16 You have successfully completed this procedure. Return to the maintenance procedure that directed you to this card replacement procedure and continue as directed.

NT6X19 in an RSC-S (DS-1) Model A LCME

Application

Use this procedure to replace an NT6X19 card in an RSC-S LCME.

PEC	Suffixes	Name
NT6X19	AA	Message Waiting Line Circuit

Common procedures

None

Action

The following flowchart is only a summary of the procedure. To replace the card, use the instructions in the procedure that follows the flowchart.

NT6X19
in an RSC-S (DS-1) Model A LCME (continued)

Summary of card replacement procedure for NT6X19 card in RSC-S LCME

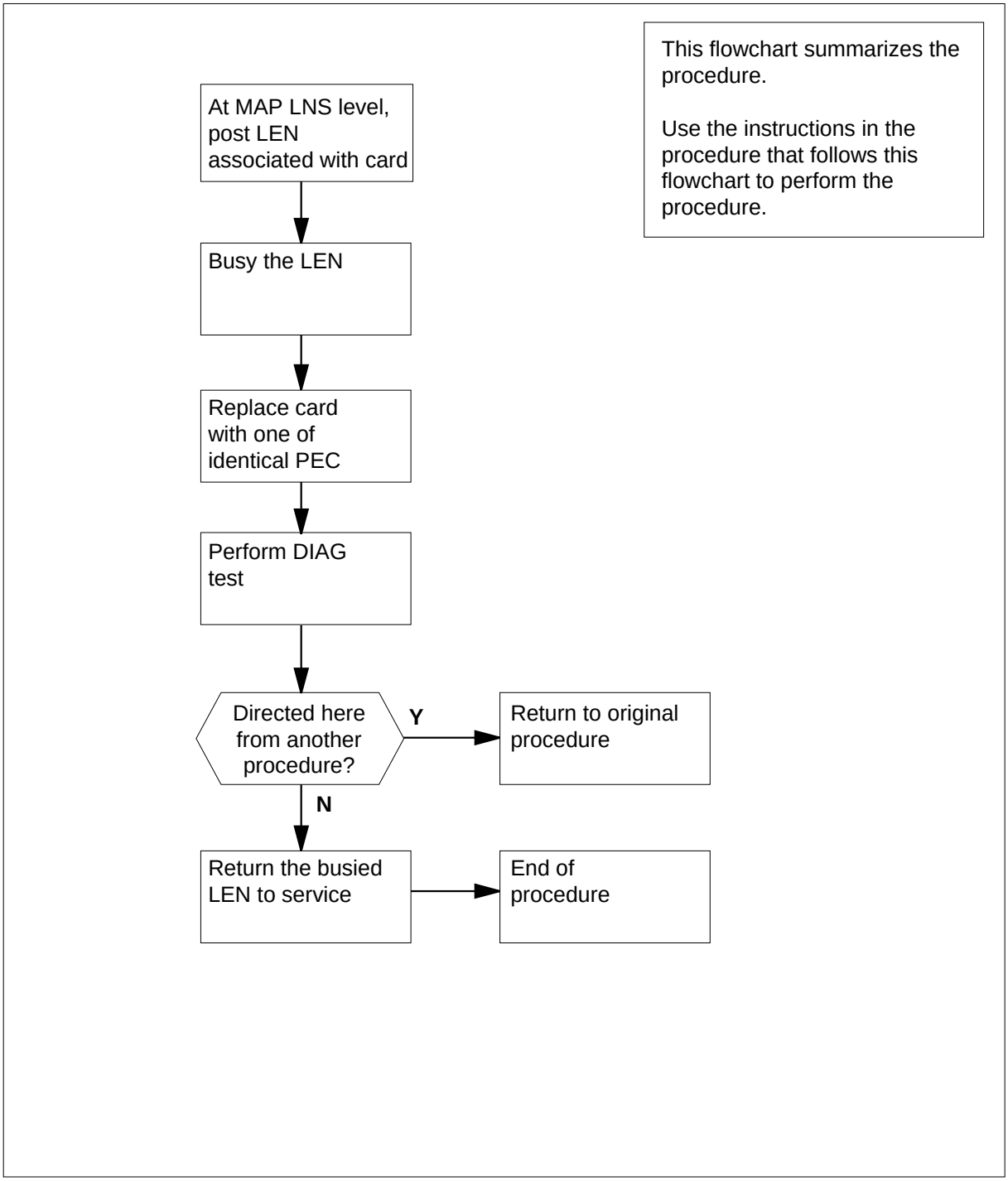

NT6X19 in an RSC-S (DS-1) Model A LCME (continued)

Replacing an NT6X19 in RSC-S LCME

At your Current Location

1 Proceed only if you have been directed to this card replacement procedure from a step in a maintenance procedure, are using the procedure for verifying or accepting cards, or have been directed to this procedure by your maintenance support group.

2 Obtain an NT6X19 replacement card. Ensure the replacement card has the same product equipment code (PEC), including suffix, as the card that is to be removed.

At the MAP terminal

3 Post the LEN of the card to be replaced by typing

```
>mapci;mtc;lns;ltp;post l site lcme_no unit_no lsg_no ckt_no
```

and pressing the Enter key.

where

site
is the location name of the LCME with the faulty card

lcme_no
is the number of the LCME with the faulty card

unit_no
is the number of the LCME unit with the faulty card

lsg_no
is the number of the LSG with the faulty card

ckt_no
is the number of the circuit associated with the faulty card

Example of a MAP display:

NT6X19
in an RSC-S (DS-1) Model A LCME (continued)

```
 CM    MS    IOD    Net    PM    CCS    LNS    Trks    Ext    Appl
  .     .     .      .      .     .      .       .      .      .

LTP
 0 Quit     Post       DELQ       BUSYQ        PREFIX
 2 Post_
 3          LCC PTY RNG....LEN......    DN   STA F S LTA TE RESULT
 4          CKT TYPE FL    HOST 00 0 03 03  NO DIRN  IDL
 5 BSY
 6 RTS
 7 DIAG
 8
 9 AIMStat
10 CKTLOC
11 Hold
12 Next_
13
14
15
16 Prefix
17 LCO
18 Level
```

4 Busy the NT6X19 line card by typing

>BSY

and pressing the Enter key.

Example of a MAP display:

```
 CM    MS    IOD    Net    PM    CCS    LNS    Trks    Ext    Appl
  .     .     .      .      .     .      .       .      .      .

LTP
 0 Quit    Post       DELQ       BUSYQ        PREFIX
 2 Post_
 3         LCC PTY RNG....LEN......  DN     STA F S LTA TE RESULT
 4         CKT TYPE FL  HOST 00 0 03 03 NO DIRN  MB
 5 BSY
 6 RTS
 7 DIAG
 8
 9 AIMStat
10 CKTLOC
11 Hold
12 Next_
13
14
15
16 Prefix
17 LCO
18 Level
```

NT6X19
in an RSC-S (DS-1) Model A LCME (continued)

At the LCE frame

5

WARNING
Card damage—transport
Take the following precautions to protect circuit cards from electrical and mechanical damage during transport:

When handling a circuit card not in an electrostatic discharge (ESD) protective container, stand on a conductive floor mat and wear a wriststrap connected, through a 1-megohm resistor, to a suitably grounded object, such as a metal workbench or a DMS switch frame (Northern Telecom [Nortel] Corporate Standard 5028). Store and transport circuit cards in an ESD protective container.

WARNING
Static electricity damage
Before removing any cards, put on a wriststrap and connect it to the wriststrap grounding point on the left side of the frame supervisory panel (FSP) of the LCME. This protects the equipment against damage caused by static electricity.

DANGER
Equipment damage
Take the following precautions when removing or inserting a card:

1. Do not apply direct pressure to the components.
2. Do not force the cards into the slots.

DANGER
Hot materials
Exercise care when handling the line card. The line feed resistor may be very hot.

NT6X19
in an RSC-S (DS-1) Model A LCME (continued)

CAUTION
Special tools required
Card shrouds and removal tools are required for removing cards from the line drawers. For descriptions of these tools, refer to the following notes.

Put on a wriststrap.

Note: Card shrouds are required for inserting or removing cards in line drawers. Two sizes are available for use with 3-inch and 6-inch cards, as shown in the following table.

Line card insertion / withdrawal tool for	Apparatus code	Common product code
3-inch cards	QTH56A	A0298291
6-inch cards	QTH58A	A0313317

Note: Card removal tools are required for removing cards from line drawers. Two sizes are available, as shown in the following table.

Card removal tool for	Apparatus code	Common product code
3—4 inch cards	QTH57A	A0298292
Note: For 4-inch or larger cards, use the large grip tool ITA9953.		

6 Prepare to remove the faulty card by opening the line drawer, identified instep 1, and following these substeps:

a Face the drawer shelf and grasp the handle at the bottom of the drawer with your right hand.

b Push up on the drawer latch with your thumb, and pull the drawer out until fully withdrawn. It is fully withdrawn when the drawer stop, at the top, prevents further travel.

c Maintain a slight pull on the handle and lift the faceplate of the drawer approximately 2.5 cm (1.0 in).

d While holding the drawer in this position, push the bottom of the drawer, nearest the shelf with your left hand, to a position about 1.0 cm (0.5 in) to the right.

e Hold the drawer in this position with your left hand, and lower the faceplate of the drawer by releasing the grip of your right hand.

NT6X19
in an RSC-S (DS-1) Model A LCME (continued)

f Ensure a card shroud and line card extractor are available.

7 Remove the line card to be replaced by using the following substeps.

a Slide a card shroud over the card to be removed and an adjacent card. If there is not an adjacent card on either side, do not use the card shroud.

b Grasp the edge of the card with a line card extractor at a point midway between the top and bottom edges. Hold the extractor in your right hand.

c Squeeze the handles of the extractor together to grasp the card tightly.

d Hold the front cover of the line drawer to steady it using your left hand.

e Pull the extractor away from the drawer until the card becomes unplugged.

f Continue pulling the card with the extractor until the card is clear of the shroud.

g Insert the card removed into the ESD container and store using local procedures.

8 Replace the faulty card using the following substeps:

a Remove the replacement card from the ESD container.

b Slide the card in the shroud guide slots toward the drawer backplane.

c Hold the front cover of the line drawer with your left hand to steady it.

d Grasp the top and bottom edges of the card with the fingers of your right hand.

e Push the card toward the backplane until it plugs fully into the backplane socket.

At the MAP terminal

9 Use the following information to determine where to proceed.

If you entered this procedure from	Do
alarm clearing procedures	step 14
other	step 10

10 Test the NT6X19 line card by typing

`>DIAG`

and pressing the Enter key.

If DIAG	Do
passed	step 11
failed	step 14

NT6X19 in an RSC-S (DS-1) Model A LCME (end)

11 Return the NT6X19 card to service by typing

>RTS

and pressing the Enter key.

If RTS	Do
passed	step 12
failed	step 16

12 Send any faulty cards for repair according to local procedure.

13 Record the date the card was replaced, the serial number of the card, and the symptoms that prompted replacement of the card. Go to step 16.

14 Return to the procedure that directed you to this procedure. If necessary, go to the point where a faulty card list was produced, identify the next faulty card on the list, and go to the appropriate card replacement procedure for that card in this manual.

15 Obtain further assistance in replacing this card by contacting operating company maintenance personnel.

16 You have successfully completed this procedure. Return to the maintenance procedure that directed you to this card replacement procedure and continue as directed.

NT6X19 in an RSC-S (DS-1) Model B LCME

Application

Use this procedure to replace an NT6X19 card in an RSC-S LCME.

PEC	Suffixes	Name
NT6X19	AA	Message Waiting Line Circuit

Common procedures

None

Action

The following flowchart is only a summary of the procedure. To replace the card, use the instructions in the procedure that follows the flowchart.

NT6X19
in an RSC-S (DS-1) Model B LCME (continued)

Summary of card replacement procedure for NT6X19 card in RSC-S LCME

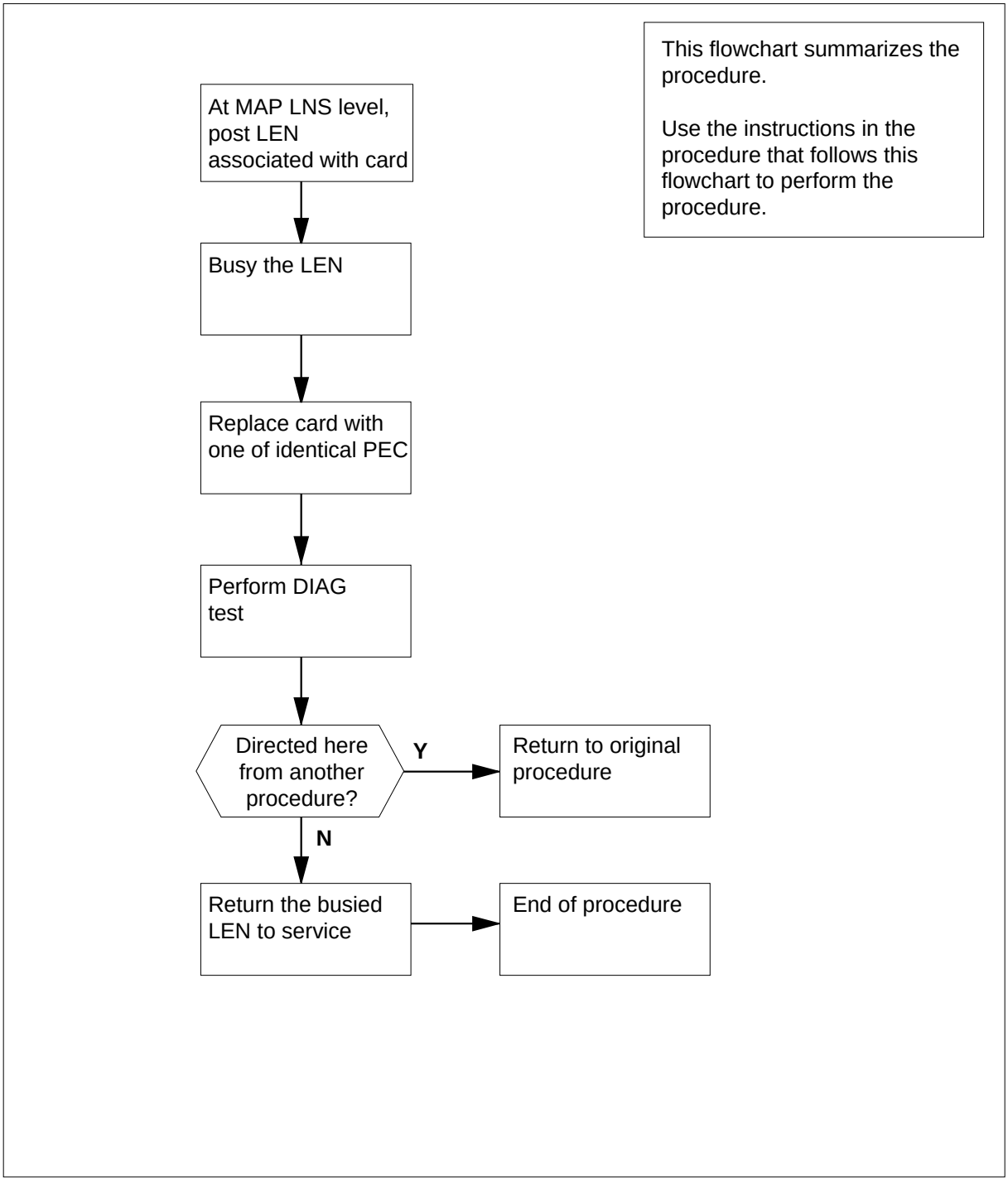

Replacing an NT6X19 in RSC-S LCME

At your Current Location

1 Proceed only if you have been directed to this card replacement procedure from a step in a maintenance procedure, are using the procedure for verifying or accepting cards, or have been directed to this procedure by your maintenance support group.

2 Obtain an NT6X19 replacement card. Ensure the replacement card has the same product equipment code (PEC), including suffix, as the card that is to be removed.

At the MAP terminal

3 Post the LEN of the card to be replaced by typing

```
>mapci;mtc;lns;ltp;post l site lcme_no unit_no lsg_no ckt_no
```

and pressing the Enter key.

where

site
is the location name of the LCME with the faulty card

lcme_no
is the number of the LCME with the faulty card

unit_no
is the number of the LCME unit with the faulty card

lsg_no
is the number of the LSG with the faulty card

ckt_no
is the number of the circuit associated with the faulty card

Example of a MAP display:

NT6X19
in an RSC-S (DS-1) Model B LCME (continued)

```
 CM    MS    IOD    Net    PM    CCS    LNS    Trks    Ext    Appl
 .      .     .       .     .      .       .      .       .      .

LTP
 0 Quit     Post       DELQ       BUSYQ        PREFIX
 2 Post_
 3          LCC PTY RNG....LEN......    DN   STA F S LTA TE RESULT
 4          CKT TYPE FL    HOST 00 0 03 03  NO DIRN  IDL
 5 BSY
 6 RTS
 7 DIAG
 8
 9 AIMStat
10 CKTLOC
11 Hold
12 Next_
13
14
15
16 Prefix
17 LCO
18 Level
```

4 Busy the NT6X19 line card by typing

>BSY

and pressing the Enter key.

Example of a MAP display:

```
 CM    MS    IOD    Net    PM    CCS    LNS    Trks    Ext    Appl
 .      .     .       .     .      .       .      .       .      .

LTP
 0 Quit    Post       DELQ       BUSYQ        PREFIX
 2 Post_
 3         LCC PTY RNG....LEN......  DN     STA F S LTA TE RESULT
 4         CKT TYPE FL  HOST 00 0 03 03 NO DIRN  MB
 5 BSY
 6 RTS
 7 DIAG
 8
 9 AIMStat
10 CKTLOC
11 Hold
12 Next_
13
14
15
16 Prefix
17 LCO
18 Level
```

NT6X19
in an RSC-S (DS-1) Model B LCME (continued)

At the LCE frame

5

WARNING
Card damage—transport
Take the following precautions to protect circuit cards from electrical and mechanical damage during transport:

When handling a circuit card not in an electrostatic discharge (ESD) protective container, stand on a conductive floor mat and wear a wriststrap connected, through a 1-megohm resistor, to a suitably grounded object, such as a metal workbench or a DMS switch frame (Northern Telecom [Nortel] Corporate Standard 5028). Store and transport circuit cards in an ESD protective container.

WARNING
Static electricity damage
Before removing any cards, put on a wriststrap and connect it to the wriststrap grounding point on the left side of the modular supervisory panel (MSP) of the LCME. This protects the equipment against damage caused by static electricity.

DANGER
Equipment damage
Take the following precautions when removing or inserting a card:

1. Do not apply direct pressure to the components.
2. Do not force the cards into the slots.

DANGER
Hot materials
Exercise care when handling the line card. The line feed resistor may be very hot.

NT6X19
in an RSC-S (DS-1) Model B LCME (continued)

CAUTION
Special tools required
Card shrouds and removal tools are required for removing cards from the line drawers. For descriptions of these tools, refer to the following notes.

Put on a wriststrap.

Note: Card shrouds are required for inserting or removing cards in line drawers. Two sizes are available for use with 3-inch and 6-inch cards, as shown in the following table.

Line card insertion / withdrawal tool for	Apparatus code	Common product code
3-inch cards	QTH56A	A0298291
6-inch cards	QTH58A	A0313317

Note: Card removal tools are required for removing cards from line drawers. Two sizes are available, as shown in the following table.

Card removal tool for	Apparatus code	Common product code
3—4 inch cards	QTH57A	A0298292
Note: For 4-inch or larger cards, use the large grip tool ITA9953.		

6 Prepare to remove the faulty card by opening the line drawer, identified instep 1, and following these substeps:

a Face the drawer shelf and grasp the handle at the bottom of the drawer with your right hand.

b Push up on the drawer latch with your thumb, and pull the drawer out until fully withdrawn. It is fully withdrawn when the drawer stop, at the top, prevents further travel.

c Maintain a slight pull on the handle and lift the faceplate of the drawer approximately 2.5 cm (1.0 in).

d While holding the drawer in this position, push the bottom of the drawer, nearest the shelf with your left hand, to a position about 1.0 cm (0.5 in) to the right.

e Hold the drawer in this position with your left hand, and lower the faceplate of the drawer by releasing the grip of your right hand.

NT6X19
in an RSC-S (DS-1) Model B LCME (continued)

f Ensure a card shroud and line card extractor are available.

7 Remove the line card to be replaced by using the following substeps.

a Slide a card shroud over the card to be removed and an adjacent card. If there is not an adjacent card on either side, do not use the card shroud.

b Grasp the edge of the card with a line card extractor at a point midway between the top and bottom edges. Hold the extractor in your right hand.

c Squeeze the handles of the extractor together to grasp the card tightly.

d Hold the front cover of the line drawer to steady it using your left hand.

e Pull the extractor away from the drawer until the card becomes unplugged.

f Continue pulling the card with the extractor until the card is clear of the shroud.

g Insert the card removed into the ESD container and store using local procedures.

8 Replace the faulty card using the following substeps:

a Remove the replacement card from the ESD container.

b Slide the card in the shroud guide slots toward the drawer backplane.

c Hold the front cover of the line drawer with your left hand to steady it.

d Grasp the top and bottom edges of the card with the fingers of your right hand.

e Push the card toward the backplane until it plugs fully into the backplane socket.

At the MAP terminal

9 Use the following information to determine where to proceed.

If you entered this procedure from	Do
alarm clearing procedures	step 14
other	step 10

10 Test the NT6X19 line card by typing

`>DIAG`

and pressing the Enter key.

If DIAG	Do
passed	step 11
failed	step 14

NT6X19 in an RSC-S (DS-1) Model B LCME (end)

11 Return the NT6X19 card to service by typing

>RTS

and pressing the Enter key.

If RTS	Do
passed	step 12
failed	step 16

12 Send any faulty cards for repair according to local procedure.

13 Record the date the card was replaced, the serial number of the card, and the symptoms that prompted replacement of the card. Go to step 16.

14 Return to the procedure that directed you to this procedure. If necessary, go to the point where a faulty card list was produced, identify the next faulty card on the list, and go to the appropriate card replacement procedure for that card in this manual.

15 Obtain further assistance in replacing this card by contacting operating company maintenance personnel.

16 You have successfully completed this procedure. Return to the maintenance procedure that directed you to this card replacement procedure and continue as directed.

NT6X19 in a STAR or RLD

Application

Use this procedure to replace the following card in a STAR.

PEC	Suffixes	Name
NT6X19	AA	Message Waiting Line Card

Common procedures

The common replacing a line card procedure is referenced in this procedure.

Action

The following flowchart is a summary of the procedure. To replace the card, use the instructions in the procedure that follows the flowchart.

NT6X19
in a STAR or RLD (continued)

Summary of replacing an NT6X19 card in a STAR or RLD

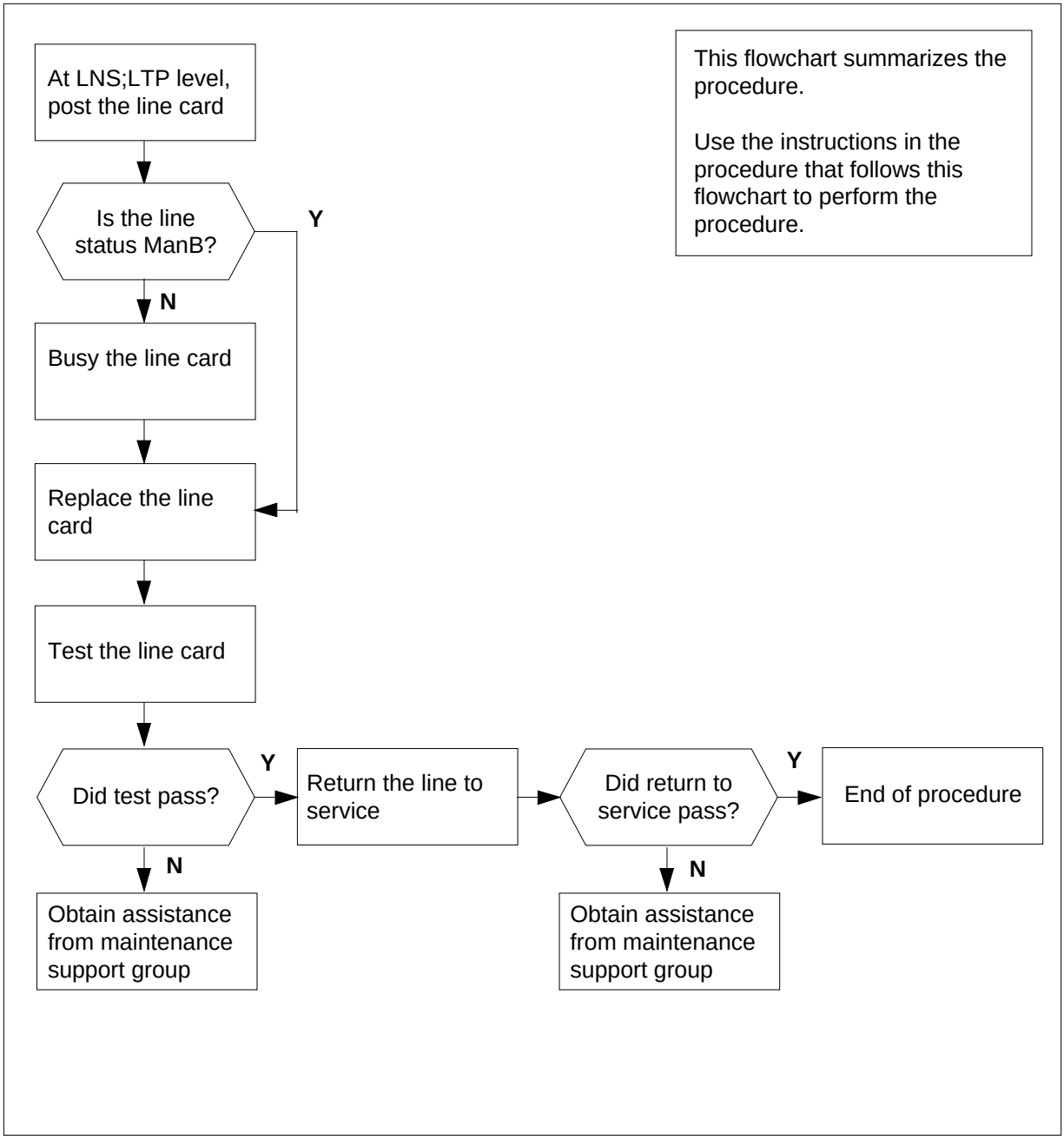

NT6X19 in a STAR or RLD (continued)

Replacing an NT6X19 card in a STAR or RLD

At your current location

1 Get a replacement card. Make sure the replacement card has the same product equipment code (PEC), including suffix, as the card that is to be removed.

At the MAP terminal

2 To access the LTP level of the MAP and post the line associated with the card to be replaced, type

`>MAPCI;MTC;LNS;LTP;POST L site frame unit lsg ckt`

and press the Enter key.

where

site
is the name of the site where the STAR is located

frame
is the frame number of the STAR with the faulty card

unit
is 0 for the STAR

lsg
is the number of the line subgroup with the faulty card (0-35)

ckt
is the number of the circuit associated with the faulty card (0-31)

Example of a MAP response:

```
LCC PTY RNG .....LEN.......... DN   STA F S LTA TE RESULT
RES      REM1 00 0 03 03     7213355 MB
```

3 Check the status of the posted line.

If the line status is	Do
manual busy (ManB)	step 5
not ManB	step 4

4 To busy the line, type

`>BSY`

and press the Enter key.

5 Go to the common replacing a line card procedure in this document. When you have completed the procedure, return to this point.

NT6X19 in a STAR or RLD (end)

At the MAP terminal

6 To test the line card just replaced, type

>DIAG

and press the Enter key.

If DIAG	Do
passes	step 7
fails	step 10

7 To return the line card to service, type

>RTS

and press the Enter key.

If RTS	Do
passes	step 8
fails	step 10

8 Send any faulty cards for repair according to local procedure.

9 Record the following items in office records:

- date the card was replaced
- serial number of the card
- indications that prompted replacement of the card

Go to step 11.

10 Get additional help in replacing this card by contacting the personnel responsible for a higher level of support.

11 You have correctly completed this procedure.

NT6X20 in an IOPAC ILCM

Application

Use this procedure to replace the following card in an International line concentrating module (ILCM).

PEC	Suffixes	Name
NT6X20	AA	Message waiting converter

Common procedures

The common replacing a line card procedure is referenced in this procedure:

Action

The following flowchart is only a summary of the procedure. To replace the card, use the instructions in the step-action procedure that follows the flowchart.

NT6X20
in an IOPAC ILCM (continued)

Summary of card replacement procedure for NT6X20 card in an ILCM

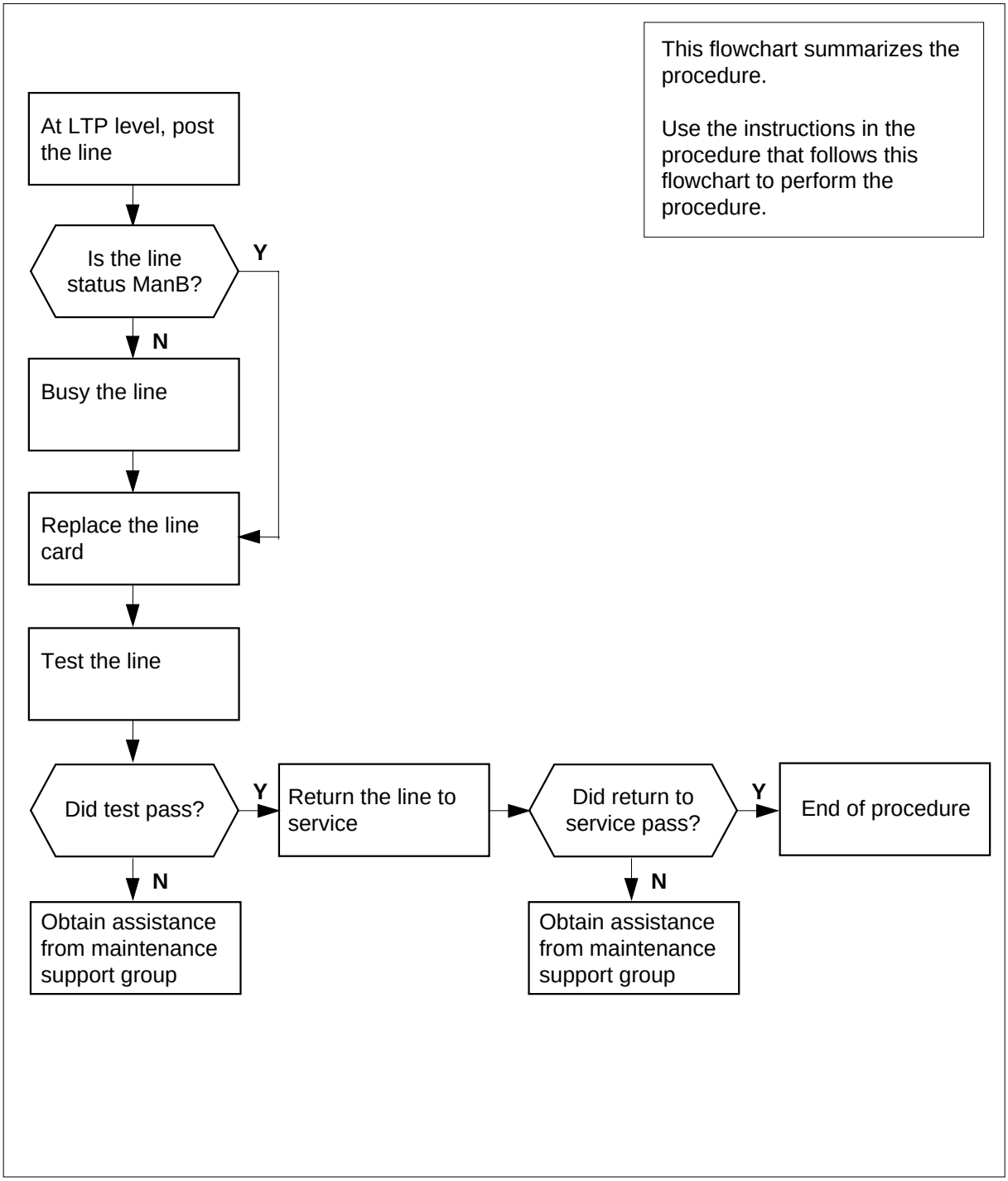

NT6X20 in an IOPAC ILCM (continued)

Replacing an NT6X20 in an ILCM

At the MAP terminal

1 Obtain a replacement card. Ensure the replacement card has the same product equipment code (PEC), including suffix, as the card to be removed.

2 Access the line test position (LTP) level of the MAP terminal and post the line associated with the card to be replaced by typing

`>MAPCI;MTC;LNS;LTP;POST L site lcm lsg ckt`

and pressing the Enter key.

where

site
is the name of the site where the IOPAC is located

lcm
is the number of the ILCM with the faulty card

lsg
is the number of the line subgroup with the faulty card

ckt
is the number of the circuit associated with the faulty card

Example of a MAP response:

```
LCC PTY RNG .....LEN........  DN   STA F S LTA TE RESULT
1FR      REM1 00 0 03 03   NODIRN IDL
```

3 Check the status of the posted line.

If the line status is	Do
manual busy (ManB)	step 5
not ManB	step 4

4 Busy the line by typing

`>BSY`

and pressing the Enter key.

At the IOPAC site

5 Go to the common replacing a line card procedure in this document. When you have completed the procedure, return to this step.

NT6X20 in an IOPAC ILCM (end)

At the MAP terminal

6 Test the line card just replaced by typing

`>DIAG`

and pressing the Enter key.

If the DIAG	Do
passed	step 7
failed	step 10

7 Return the line card to service by typing

`RTS`

and pressing the Enter key.

If RTS	Do
passed	step 8
failed	step 10

8 Send any faulty cards for repair according to local procedure.

9 Record the following items in office records:

- date the card was replaced
- serial number of the card
- symptoms that prompted replacement of the card

Go to step 11.

10 Obtain further assistance in replacing this card by contacting the personnel responsible for higher level of support.

11 You have successfully completed this procedure.

NT6X20 in an OPM

Application

Use this procedure to replace the following card in an OPM.

PEC	Suffixes	Name
NT6X20	AA	Message Waiting Converter

Common procedures

The common replacing a line card procedure is referenced in this procedure.

Action

The following flowchart is a summary of the procedure. To replace the card, use the instructions in the procedure that follows the flowchart.

NT6X20 in an OPM (continued)

Summary of card replacement procedure for an NT6X20 card OPM

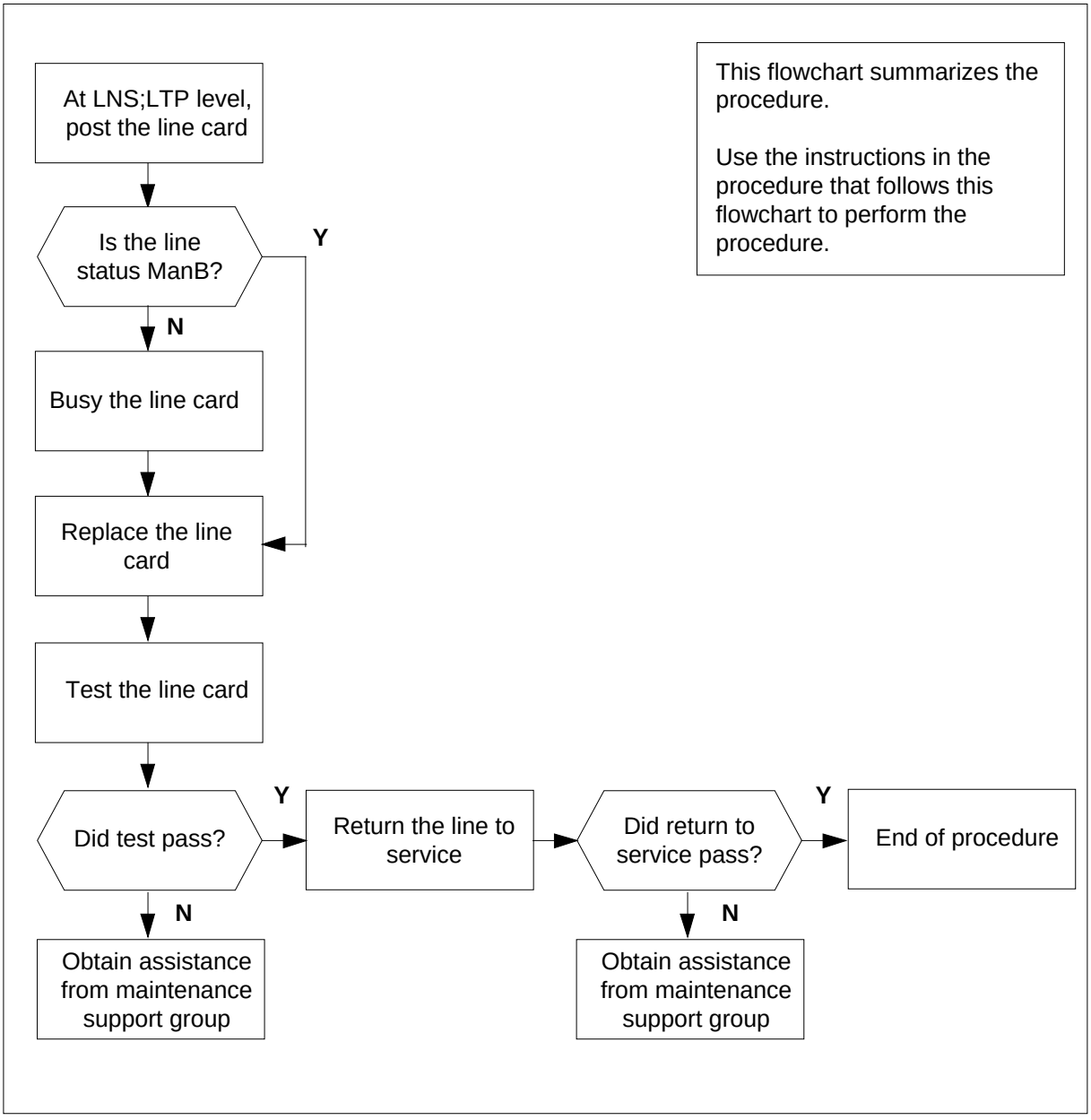

Replacing an NT6X20 card in an OPM

At your current location

1 Obtain a replacement card. Ensure that the replacement card has the same product equipment code (PEC), including suffix, as the card that is to be removed.

At the MAP terminal

2 Access the LTP level of the MAP terminal and post the line associated with the card to be replaced by typing

`>MAPCI;MTC;LNS;LTP;POST L site lcm lsg ckt`

and pressing the Enter key.

where

site
is the name of the site where the OPM is located

lcm
is the number of the OPM with the faulty card

lsg
is the number of the line subgroup with the faulty card

ckt
is the number of the circuit associated with the faulty card

Example of a MAP response:

```
LCC PTY RNG .....LEN.......... DN   STA F S LTA TE RESULT
1FR      REM1 00 0 03 03     7213355 MB
```

3 Check the status of the posted line.

If the line status is	Do
manual busy (ManB)	step 5
not ManB	step 4

4 Busy the line by typing

`>BSY`

and pressing the Enter key.

5 Go to the common replacing a line card procedure.in this document. When you have completed the procedure, return to this point.

NT6X20 in an OPM (end)

At the MAP terminal

6 Test the line card just replaced by typing

`>DIAG`

and pressing the Enter key.

If DIAG	Do
passed	step 7
failed	step 10

7 Return the line card to service by typing

`>RTS`

and pressing the Enter key.

If RTS	Do
passed	step 8
failed	step 10

8 Send any faulty cards for repair according to local procedure.

9 Record the following items in office records:

- date the card was replaced
- serial number of the card
- symptoms that prompted replacement of the card

Go to step 11.

10 Obtain further assistance in replacing this card by contacting the personnel responsible for higher level of support.

11 You have successfully completed this procedure.

NT6X20 in an RLCM

Application

Use this procedure to replace the following card in an RLCM.

PEC	Suffixes	Name
NT6X20	AA	Message Waiting Converter

Common procedures

The common replacing a line card procedure is referenced in this procedure.

Action

The following flowchart is a summary of the procedure. To replace the card, use the instructions in the procedure that follows the flowchart.

NT6X20
in an RLCM (continued)

Summary of card replacement procedure for an NT6X20 card in an RLCM

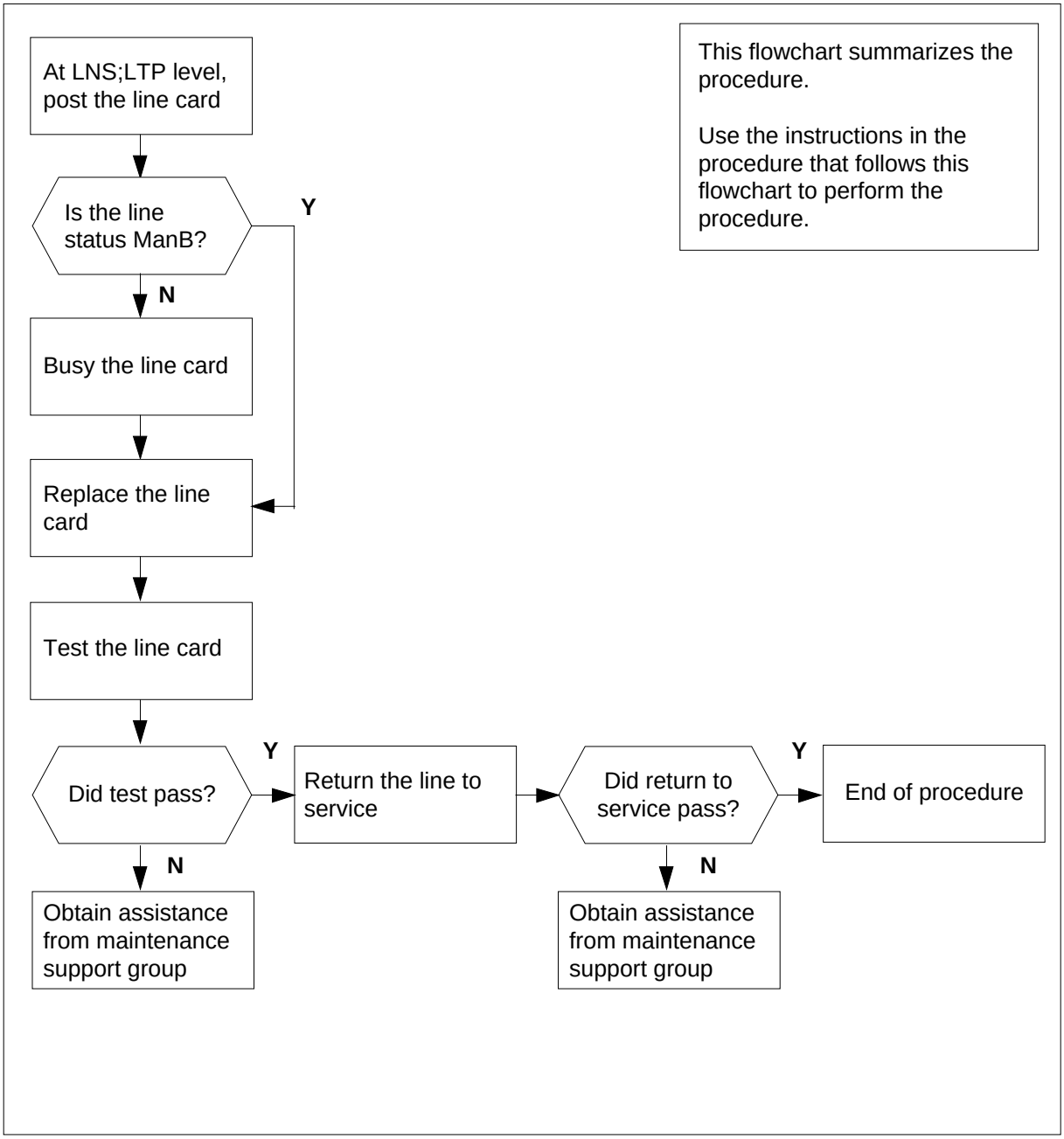

Replacing an NT6X20 card in an RLCM

At your current location

1 Obtain a replacement card. Ensure that the replacement card has the same product equipment code (PEC), including suffix, as the card that is to be removed.

At the MAP terminal

2 Access the LTP level of the MAP terminal and post the line associated with the card to be replaced by typing

`>MAPCI;MTC;LNS;LTP;POST L site lcm lsg ckt`

and pressing the Enter key.

where

site
is the name of the site where the RLCM is located

lcm
is the number of the RLCM with the faulty card

lsg
is the number of the line subgroup with the faulty card

ckt
is the number of the circuit associated with the faulty card

Example of a MAP response:

```
LCC PTY RNG .....LEN.......... DN   STA F S LTA TE RESULT
1FR      REM1 00 0 03 03     7213355 MB
```

3 Check the status of the posted line.

If the line status is	Do
manual busy (ManB)	step 5
not ManB	step 4

4 Busy the line by typing

`>BSY`

and pressing the Enter key.

5 Go to the common replacing a line card procedure in this document. When you have completed the procedure, return to this point.

NT6X20 in an RLCM (end)

At the MAP terminal

6 Test the line card just replaced by typing

>DIAG

and pressing the Enter key.

If DIAG	Do
passed	step 7
failed	step 10

7 Return the line card to service by typing

>RTS

and pressing the Enter key.

If RTS	Do
passed	step 8
failed	step 10

8 Send any faulty cards for repair according to local procedure.

9 Record the following items in office records:

- date the card was replaced
- serial number of the card
- symptoms that prompted replacement of the card

Go to step 11.

10 Obtain further assistance in replacing this card by contacting the personnel responsible for higher level of support.

11 You have successfully completed this procedure.

NT6X20 in an RSC LCM

Application

Use this procedure to replace the following card in an RSC LCM.

PEC	Suffixes	Name
NT6X20	AA	Message waiting converter

Common procedures

None

Action

The following flowchart is a summary of the procedure. To replace the card, use the instructions in the procedure that follows the flowchart.

NT6X20 in an RSC LCM (continued)

Summary of card replacement procedure for NT6X20 card in an RSC LCM

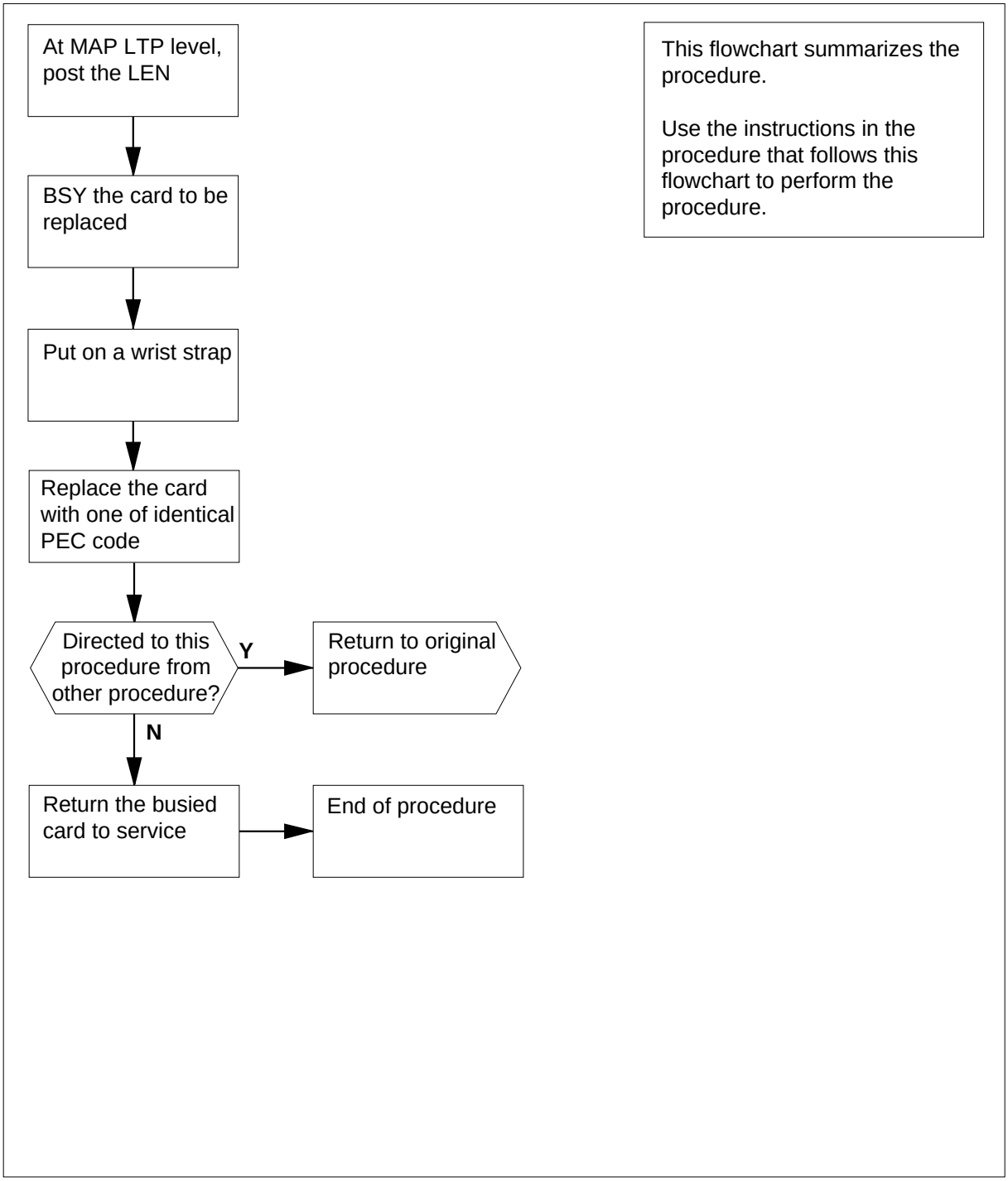

Replacing an NT6X20 card in an RSC LCM

At your current location

1 Proceed only if you were either directed to this card replacement procedure from a step in a maintenance procedure, are using the procedure for verifying or accepting cards, or were directed to this procedure by your maintenance support group.

2 Obtain a replacement card. Ensure the replacement card has the same product equipment code (PEC) including suffix, as the card that is to be removed.

At the MAP terminal

3 Post the LEN of the card to be replaced by typing

```
>MAPCI;MTC;LNS;LTP;POST L site lcm_no lsg_no ckt_no
```

and pressing the Enter key.

where

site
is the site name given to the remote location

lcm_no
is the number of the LCM with the faulty card

lsg_no
is the number of the LSG with the faulty card

ckt_no
is the number of the circuit associated with the faulty card

Example of a MAP display:

NT6X20
in an RSC LCM (continued)

```
 CM    MS    IOD    Net    PM     CCS     LNS   Trks    Ext    Appl
  .     .     .      .      .      .       .      .      .       .
LTP
 0 Quit       Post       DELQ       BUSYQ        PREFIX
 2 Post_
 3          LCC PTY RNG....LEN......DN     STA  F  S  LTA  TE RESULT
     CKT TYPE FL REM1 00 0 03 03 4931082 IDL
 5 BSY
 6 RTS
 7 DIAG
 8
 9 AIMStat
10 CKTLOC
11 Hold
12 Next_
13
14
15
16 Prefix
17 LCO
18 Level
```

4 Busy the NT6X20 line card by typing

>BSY

and pressing the Enter key.

Example of a MAP display:

```
 CM    MS    IOD    Net    PM     CCS     LNS   Trks    Ext    Appl
  .     .     .      .      .      .       .      .      .       .
LTP
 0 Quit       Post       DELQ       BUSYQ        PREFIX
 2 Post_
 3          LCC PTY RNG....LEN......DN     STA  F  S  LTA  TE RESULT
     CKT TYPE FL REM1 00 0 03 03 4931082 MB
 5 BSY
 6 RTS
 7 DIAG
 8
 9 AIMStat
10 CKTLOC
11 Hold
12 Next_
13
14
15
16 Prefix
17 LCO
18 Level
```

NT6X20
in an RSC LCM (continued)

At the LCE frame

5

WARNING
Card damage—transport
Take the following precautions to protect circuit cards from electrical and mechanical damage when transporting them.

When handling a circuit card not in an electrostatic discharge (ESD) protective container, stand on a conductive floor mat and wear a wrist strap connected, through a 1-megohm resistor, to a suitably grounded object, such as a metal workbench or a DMS frame (Northern Telecom Corporate Standard 5028).

Store and transport circuit cards in an ESD protective container.

WARNING
Static electricity damage
Before removing any cards, put on a wrist strap and connect it to the wrist strap grounding point on the left side of the frame supervisory panel of the LCM. This protects the equipment against damage caused by static electricity.

DANGER
Equipment damage
Take these precautions when removing or inserting a card:

1. Do not apply direct pressure to the components.
2. Do not force the cards into the slots.

CAUTION
Special tools required
Card shrouds and removal tools are required for removing cards from the line drawers. For descriptions of these tools, refer to the notes at the end of this procedure.

Put on a wrist strap.

NT6X20 in an RSC LCM (continued)

6

DANGER
Hot materials
Exercise care when handling the line card. The line feed resistor may be hot.

Open the line drawer using the following steps:

a Face the drawer shelf and grasp the handle at the bottom of the drawer with your right hand.

b Push up on the drawer latch with your thumb and pull the drawer out untilfully withdrawn. It is fully withdrawn when the drawer stop is at the top, to prevent further travel.

c Maintain a slight pull on the handle and lift the faceplate of the drawer approximately 2.5 cm (1 inch).

d While holding the drawer in this position, push the bottom of the drawer nearest the shelf with your left hand, to a position about one 1 cm (.5 inch) to the right.

e Hold the drawer in this position with your left hand and lower the faceplate of the drawer by releasing the grip of your right hand.

f Ensure that a card shroud and line card extractor are available.

Note: Card shrouds are required for inserting or removing cards in line drawers. Two sizes are available for use with 3-inch and 6-inch cards, as shown in the following table.

Line card insertion / withdrawal tool for	Apparatus code	Common product code
3-inch cards	QTH56A	A0298291
6-inch cards	QTH58A	A0313317

Note: Card removal tools are required for removing cards from line drawers. Two sizes are available, as shown in the following table.

Card removal tool for	Apparatus code	Common product code
3—4 inch cards	QTH57A	A0298292
Note: For 4-inch or larger cards, use the large grip tool ITA9953.		

NT6X20
in an RSC LCM (continued)

7 Remove the line card to be replaced by using the following steps:

a Slide a card shroud over the card to be removed and an adjacent card. If there is not an adjacent card on either side, do not use the card shroud.

b Grasp the edge of the card with a line card extractor at a point midway between the top and bottom edges. Hold the extractor in your right hand.

c Squeeze the handles of the extractor together to grasp the card tightly.

d Hold the front cover of the line drawer to steady it with your left hand.

e Pull the extractor away from the drawer and the card will come unplugged from its socket on the drawer backplane.

f Continue pulling the card with the extractor until the card is clear of the shroud.

g Insert the removed card into ESD container and store per local procedures.

8 Replace the faulty card by using the following steps:

a Remove the replacement card from the ESD container.

b Slide the card in the shroud guide slots towards the drawer backplane.

c Hold the front cover of the line drawer with your left hand to steady it.

d Grasp the top and bottom edges of the card with the fingers of your right hand.

e Push the card towards the backplane until it plugs fully into the backplane socket.

9 Use the following information to determine the next step in this procedure.

If you entered this procedure from	Do
an alarm clearing procedure	step 14
other	step 10

At the MAP terminal

10 Test the NT6X20 line card by typing

`>DIAG`

and pressing the Enter key.

If DIAG	Do
passed	step 11
failed	step 15

11 Return the NT6X20 card to service by typing

`>RTS`

NT6X20 in an RSC LCM (end)

and pressing the Enter key.

If RTS	Do
passed	step 12
failed	step 15

12 Send any faulty cards for repair according to local procedure.

13 Record the following items in office records:

- date the card was replaced
- serial number of the card
- symptoms that prompted replacement of the card

Go to step 16.

14 Return to the *Alarm Clearing Procedures* that directed you to this card replacement procedure. If necessary, go to the point where the faulty card list was produced, identify the next faulty card on the list, and go to the appropriate replacement procedure for that card in this manual.

15 Obtain further assistance in replacing this card by contacting personnel responsible for a higher level of support.

16 You have successfully completed this procedure. Return to the maintenance procedure that directed you to this card replacement procedure and continue as directed.

NT6X20 in an RSC-S (DS-1) Model A LCME

Application

Use this procedure to replace an NT6X20 card in an RSC-S LCME.

PEC	Suffixes	Name
NT6X20	AA	Message Waiting Converter

Common procedures

None

Action

The following flowchart is only a summary of the procedure. To replace the card, use the instructions in the procedure that follows the flowchart.

NT6X20
in an RSC-S (DS-1) Model A LCME (continued)

Summary of card replacement procedure for an NT6X20 card in an RSC-S LCME

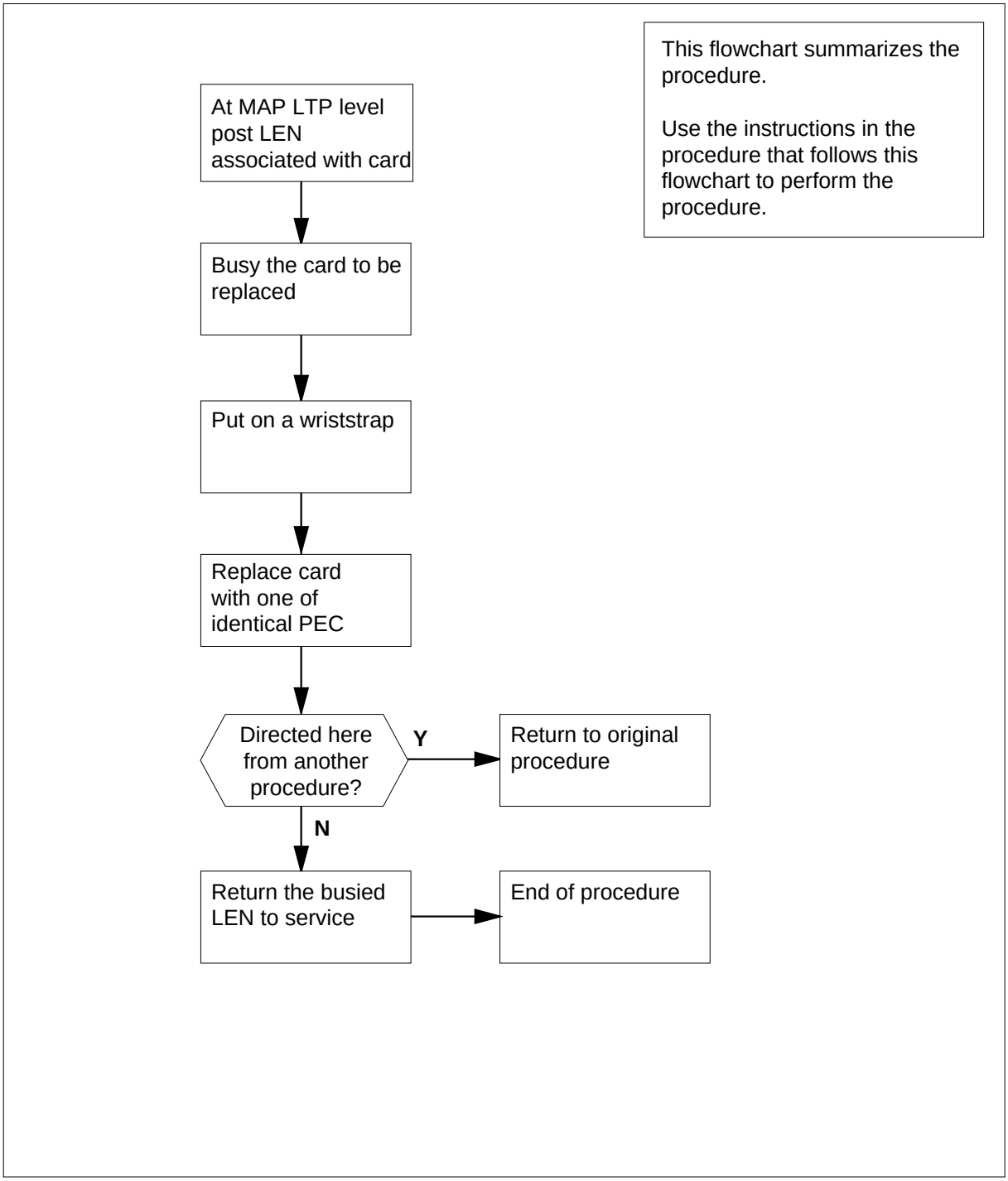

Replacing an NT6X20 card in an RSC-S LCME

At your Current Location

1 Proceed only if you have been directed to this card replacement procedure from a step in a maintenance procedure, are using the procedure for verifying or accepting cards, or have been directed to this procedure by your maintenance support group.

2 Obtain a replacement card. Ensure the replacement card has the same product equipment code (PEC), including suffix, as the card that is to be removed.

At the MAP terminal

3 Post the LEN of the card to be replaced by typing

```
>mapci;mtc;lns;ltp;post lCME site lcme_no unit_no lsg_no ckt_no
```

and pressing the Enter key.

where

site
is the location name of the LCME with the faulty card

lcme_no
is the number of the LCME with the faulty card

unit_no
is the number of the LCME unit with the faulty card

lsg_no
is the number of the LSG with the faulty card

ckt_no
is the number of the circuit associated with the faulty card

Example of a MAP display:

NT6X20
in an RSC-S (DS-1) Model A LCME (continued)

```
 CM    MS    IOD    Net    PM    CCS    LNS    Trks    Ext    Appl
 .      .     .      .     .      .      .      .       .      .

LTP
 0 Quit    Post       DELQ       BUSYQ        PREFIX
 2 Post_
 3         LCC PTY RNG....LEN......    DN   STA F S LTA TE RESULT
 4         CKT TYPE FL    HOST 00 0 03 03  NO DIRN  IDL
 5 BSY
 6 RTS
 7 DIAG
 8
 9 AIMStat
10 CKTLOC
11 Hold
12 Next_
13
14
15
16 Prefix
17 LCO
18 Level
```

4 Busy the NT6X20 line card by typing

>BSY

and pressing the Enter key.

Example of a MAP display:

```
 CM    MS    IOD    Net    PM    CCS    LNS    Trks    Ext    Appl
 .      .     .      .     .      .      .      .       .      .

LTP
 0 Quit    Post       DELQ       BUSYQ        PREFIX
 2 Post_
 3         LCC PTY RNG....LEN......  DN     STA F S LTA TE RESULT
 4         CKT TYPE FL  HOST 00 0 03 03 NO DIRN  MB
 5 BSY
 6 RTS
 7 DIAG
 8
 9 AIMStat
10 CKTLOC
11 Hold
12 Next_
13
14
15
16 Prefix
17 LCO
18 Level
```

NT6X20
in an RSC-S (DS-1) Model A LCME (continued)

At the LCE frame

5

WARNING
Card damage—transport
Take the following precautions to protect circuit cards from electrical and mechanical damage during transport:

When handling a circuit card not in an electrostatic discharge (ESD) protective container, stand on a conductive floor mat and wear a wriststrap connected, through a 1-megohm resistor, to a suitably grounded object, such as a metal workbench or a DMS switch frame (Northern Telecom [Nortel] Corporate Standard 5028). Store and transport circuit cards in an ESD protective container.

WARNING
Static electricity damage
Before removing any cards, put on a wriststrap and connect it to the wriststrap grounding point on the left side of the frame supervisory panel (FSP) of the LCME. This protects the equipment against damage caused by static electricity.

DANGER
Equipment damage
Take the following precautions when removing or inserting a card:

1. Do not apply direct pressure to the components.
2. Do not force the cards into the slots.

DANGER
Hot materials
Exercise care when handling the line card. The line feed resistor may be very hot.

NT6X20 in an RSC-S (DS-1) Model A LCME (continued)

CAUTION
Special tools required
Card shrouds and removal tools are required for removing cards from the line drawers. For descriptions of these tools, refer to the following notes.

Put on a wriststrap.

Note: Card shrouds are required for inserting or removing cards in line drawers. Two sizes are available for use with 3-inch and 6-inch cards, as shown in the following table.

Line card insertion / withdrawal tool for	Apparatus code	Common product code
3-inch cards	QTH56A	A0298291
6-inch cards	QTH58A	A0313317

Note: Card removal tools are required for removing cards from line drawers. Two sizes are available, as shown in the following table.

Card removal tool for	Apparatus code	Common product code
3—4 inch cards	QTH57A	A0298292
Note: For 4-inch or larger cards, use the large grip tool ITA9953.		

6 Prepare to remove the faulty card by opening the line drawer, identified in step 1, and following these substeps:

a Face the drawer shelf and grasp the handle at the bottom of the drawer with your right hand.

b Push up on the drawer latch with your thumb, and pull the drawer out until fully withdrawn. It is fully withdrawn when the drawer stop, at the top, prevents further travel.

c Maintain a slight pull on the handle and lift the faceplate of the drawer approximately 2.5 cm (1.0 in).

d While holding the drawer in this position, push the bottom of the drawer, nearest the shelf with your left hand, to a position about 1.0 cm (0.5 in) to the right.

e Hold the drawer in this position with your left hand and lower the faceplate of the drawer by releasing the grip of your right hand.

NT6X20
in an RSC-S (DS-1) Model A LCME (continued)

f Ensure a card shroud and line card extractor are available.

7 Remove the line card to be replaced by following these substeps:

a Slide a card shroud over the card to be removed and an adjacent card. If there is not an adjacent card on either side, do not use the card shroud.

b Grasp the edge of the card with a line card extractor at a point midway between the top and bottom edges. Hold the extractor in your right hand.

c Squeeze the handles of the extractor together to grasp the card tightly.

d Hold the front cover of the line drawer to steady it using your left hand.

e Pull the extractor away from the drawer until the card becomes unplugged from its socket on the drawer backplane.

f Continue pulling the card with the extractor until the card is clear of the shroud.

g Insert the card removed into the ESD container and store using local procedures.

8 Replace the faulty card using the following substeps:

a Remove the replacement card from the ESD container.

b Slide the card in the shroud guide slots toward the drawer backplane.

c Hold the front cover of the line drawer with your left hand to steady it.

d Grasp the top and bottom edges of the card with the fingers of your right hand.

e Push the card toward the backplane until it plugs fully into the backplane socket.

9 Use the following information to determine where to proceed.

If you entered this procedure from	Do
alarm clearing procedures	step 11
other	step 14

At the MAP terminal

10 Test the NT6X20 line card by typing

`>DIAG`

and pressing the Enter key.

If DIAG	Do
passed	step 12
failed	step 15

NT6X20 in an RSC-S (DS-1) Model A LCME (end)

11 Return the NT6X20 card to service by typing

>RTS

and pressing the Enter key.

If RTS	Do
passed	step 12
failed	step 15

12 Send any faulty cards for repair according to local procedure.

13 Record the date the card was replaced, the serial number of the card, and the symptoms that prompted replacement of the card. Go to step 16.

14 Return to the procedure that directed you to this procedure. If necessary, go to the point where a faulty card list was produced, identify the next faulty card on the list, and go to the appropriate card replacement procedure for that card in this manual.

15 Obtain further assistance in replacing this card by contacting operating company maintenance personnel.

16 You have successfully completed this procedure. Return to the maintenance procedure that directed you to this card replacement procedure and continue as directed.

NT6X20 in an RSC-S (DS-1) Model B LCME

Application

Use this procedure to replace an NT6X20 card in an RSC-S LCME.

PEC	Suffixes	Name
NT6X20	AA	Message Waiting Converter

Common procedures

None

Action

The following flowchart is only a summary of the procedure. To replace the card, use the instructions in the procedure that follows the flowchart.

NT6X20
in an RSC-S (DS-1) Model B LCME (continued)

Summary of card replacement procedure for an NT6X20 card in an RSC-S LCME

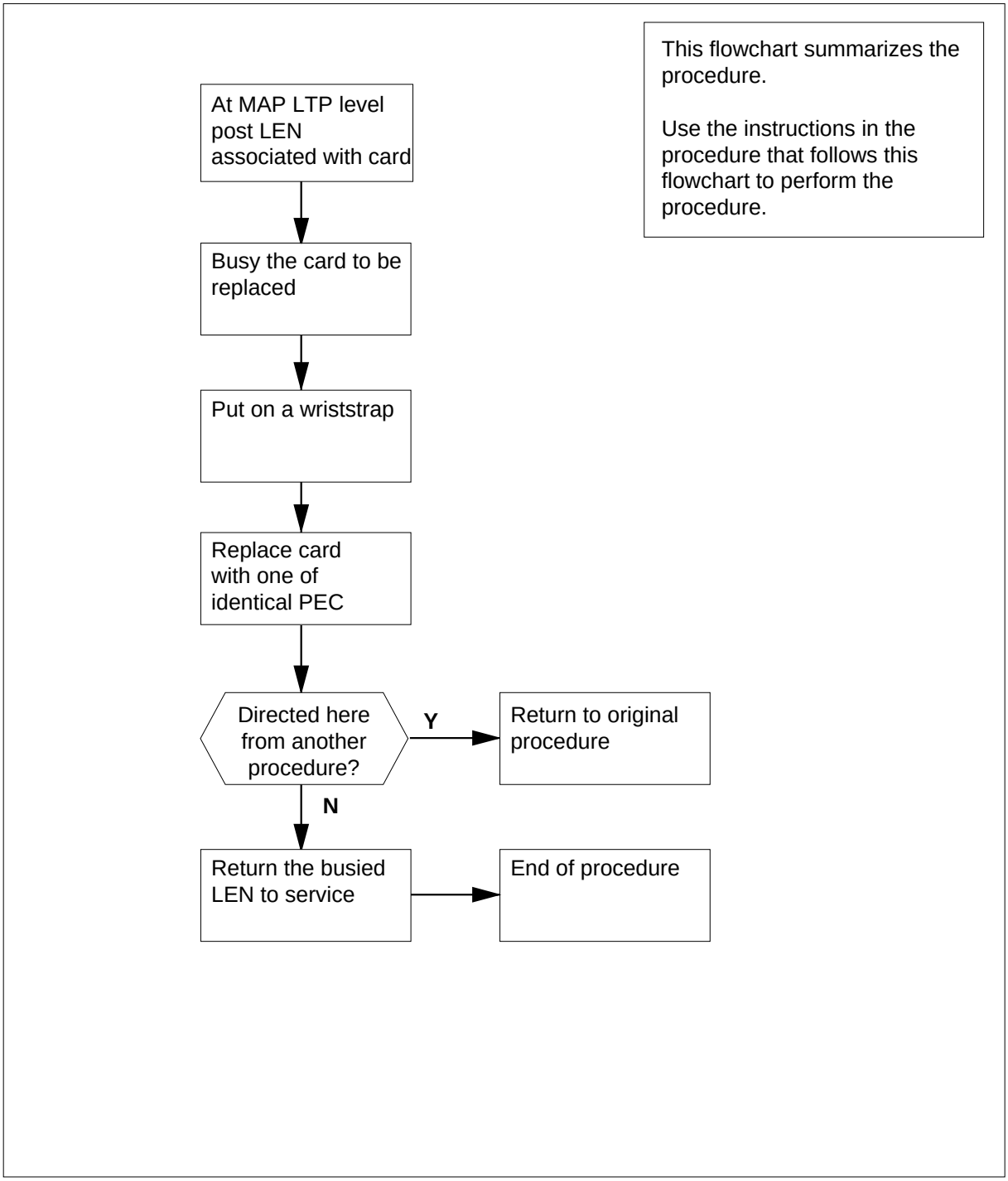

Replacing an NT6X20 card in an RSC-S LCME

At your Current Location

1 Proceed only if you have been directed to this card replacement procedure from a step in a maintenance procedure, are using the procedure for verifying or accepting cards, or have been directed to this procedure by your maintenance support group.

2 Obtain a replacement card. Ensure the replacement card has the same product equipment code (PEC), including suffix, as the card that is to be removed.

At the MAP terminal

3 Post the LEN of the card to be replaced by typing

```
>mapci;mtc;lns;ltp;post lCME site lcme_no unit_no lsg_no ckt_no
```

and pressing the Enter key.

where

site
is the location name of the LCME with the faulty card

lcme_no
is the number of the LCME with the faulty card

unit_no
is the number of the LCME unit with the faulty card

lsg_no
is the number of the LSG with the faulty card

ckt_no
is the number of the circuit associated with the faulty card

Example of a MAP display:

NT6X20
in an RSC-S (DS-1) Model B LCME (continued)

```
 CM    MS    IOD    Net    PM    CCS    LNS    Trks    Ext    Appl
 .      .     .       .     .      .       .      .       .      .

LTP
 0 Quit    Post       DELQ       BUSYQ        PREFIX
 2 Post_
 3         LCC PTY RNG....LEN......    DN   STA F S LTA TE RESULT
 4         CKT TYPE FL    HOST 00 0 03 03  NO DIRN  IDL
 5 BSY
 6 RTS
 7 DIAG
 8
 9 AIMStat
10 CKTLOC
11 Hold
12 Next_
13
14
15
16 Prefix
17 LCO
18 Level
```

4 Busy the NT6X20 line card by typing

>BSY

and pressing the Enter key.

Example of a MAP display:

```
 CM    MS    IOD    Net    PM    CCS    LNS    Trks    Ext    Appl
 .      .      .      .     .      .      .       .      .      .

LTP
 0 Quit    Post       DELQ       BUSYQ        PREFIX
 2 Post_
 3         LCC PTY RNG....LEN......  DN     STA F S LTA TE RESULT
 4         CKT TYPE FL  HOST 00 0 03 03 NO DIRN  MB
 5 BSY
 6 RTS
 7 DIAG
 8
 9 AIMStat
10 CKTLOC
11 Hold
12 Next_
13
14
15
16 Prefix
17 LCO
18 Level
```

NT6X20
in an RSC-S (DS-1) Model B LCME (continued)

At the LCE frame

5

WARNING
Card damage—transport
Take the following precautions to protect circuit cards from electrical and mechanical damage during transport:

When handling a circuit card not in an electrostatic discharge (ESD) protective container, stand on a conductive floor mat and wear a wriststrap connected, through a 1-megohm resistor, to a suitably grounded object, such as a metal workbench or a DMS switch frame (Northern Telecom [Nortel] Corporate Standard 5028). Store and transport circuit cards in an ESD protective container.

WARNING
Static electricity damage
Before removing any cards, put on a wriststrap and connect it to the wriststrap grounding point on the left side of the modular supervisory panel (MSP) of the LCME. This protects the equipment against damage caused by static electricity.

DANGER
Equipment damage
Take the following precautions when removing or inserting a card:

1. Do not apply direct pressure to the components.
2. Do not force the cards into the slots.

DANGER
Hot materials
Exercise care when handling the line card. The line feed resistor may be very hot.

NT6X20
in an RSC-S (DS-1) Model B LCME (continued)

CAUTION
Special tools required
Card shrouds and removal tools are required for removing cards from the line drawers. For descriptions of these tools, refer to the following notes.

Put on a wriststrap.

Note: Card shrouds are required for inserting or removing cards in line drawers. Two sizes are available for use with 3-inch and 6-inch cards, as shown in the following table.

Line card insertion / withdrawal tool for	Apparatus code	Common product code
3-inch cards	QTH56A	A0298291
6-inch cards	QTH58A	A0313317

Note: Card removal tools are required for removing cards from line drawers. Two sizes are available, as shown in the following table.

Card removal tool for	Apparatus code	Common product code
3—4 inch cards	QTH57A	A0298292
Note: For 4-inch or larger cards, use the large grip tool ITA9953.		

6 Prepare to remove the faulty card by opening the line drawer, identified instep 1, and following these substeps:

a Face the drawer shelf and grasp the handle at the bottom of the drawer with your right hand.

b Push up on the drawer latch with your thumb, and pull the drawer out until fully withdrawn. It is fully withdrawn when the drawer stop, at the top, prevents further travel.

c Maintain a slight pull on the handle and lift the faceplate of the drawer approximately 2.5 cm (1.0 in).

d While holding the drawer in this position, push the bottom of the drawer, nearest the shelf with your left hand, to a position about 1.0 cm (0.5 in) to the right.

e Hold the drawer in this position with your left hand and lower the faceplate of the drawer by releasing the grip of your right hand.

NT6X20
in an RSC-S (DS-1) Model B LCME (continued)

f Ensure a card shroud and line card extractor are available.

7 Remove the line card to be replaced by following these substeps:

a Slide a card shroud over the card to be removed and an adjacent card. If there is not an adjacent card on either side, do not use the card shroud.

b Grasp the edge of the card with a line card extractor at a point midway between the top and bottom edges. Hold the extractor in your right hand.

c Squeeze the handles of the extractor together to grasp the card tightly.

d Hold the front cover of the line drawer to steady it using your left hand.

e Pull the extractor away from the drawer until the card becomes unplugged from its socket on the drawer backplane.

f Continue pulling the card with the extractor until the card is clear of the shroud.

g Insert the card removed into the ESD container and store using local procedures.

8 Replace the faulty card using the following substeps:

a Remove the replacement card from the ESD container.

b Slide the card in the shroud guide slots toward the drawer backplane.

c Hold the front cover of the line drawer with your left hand to steady it.

d Grasp the top and bottom edges of the card with the fingers of your right hand.

e Push the card toward the backplane until it plugs fully into the backplane socket.

9 Use the following information to determine where to proceed.

If you entered this procedure from	Do
alarm clearing procedures	step 14
other	step 10

At the MAP terminal

10 Test the NT6X20 line card by typing

`>DIAG`

and pressing the Enter key.

If DIAG	Do
passed	step 11
failed	step 14

NT6X20 in an RSC-S (DS-1) Model B LCME (end)

11 Return the NT6X20 card to service by typing

>RTS

and pressing the Enter key.

If RTS	Do
passed	step 12
failed	step 15

12 Send any faulty cards for repair according to local procedure.

13 Record the date the card was replaced, the serial number of the card, and the symptoms that prompted replacement of the card. Go to step 16.

14 Return to the procedure that directed you to this procedure. If necessary, go to the point where a faulty card list was produced, identify the next faulty card on the list, and go to the appropriate card replacement procedure for that card in this manual.

15 Obtain further assistance in replacing this card by contacting operating company maintenance personnel.

16 You have successfully completed this procedure. Return to the maintenance procedure that directed you to this card replacement procedure and continue as directed.

NT6X20 in a STAR or RLD

Application

Use this procedure to replace the following card in a STAR or remote line drawer (RLD).

PEC	Suffixes	Name
NT6X20	AA	Message Waiting Converter

Common procedures

The common replacing a line card procedure is referenced in this procedure.

Action

The following flowchart is only a summary of the procedure. To replace the card, use the instructions in the step-action procedure that follows the flowchart.

NT6X20 in a STAR or RLD (continued)

Summary of card replacement procedure for an NT6X20 card in a STAR or RLD

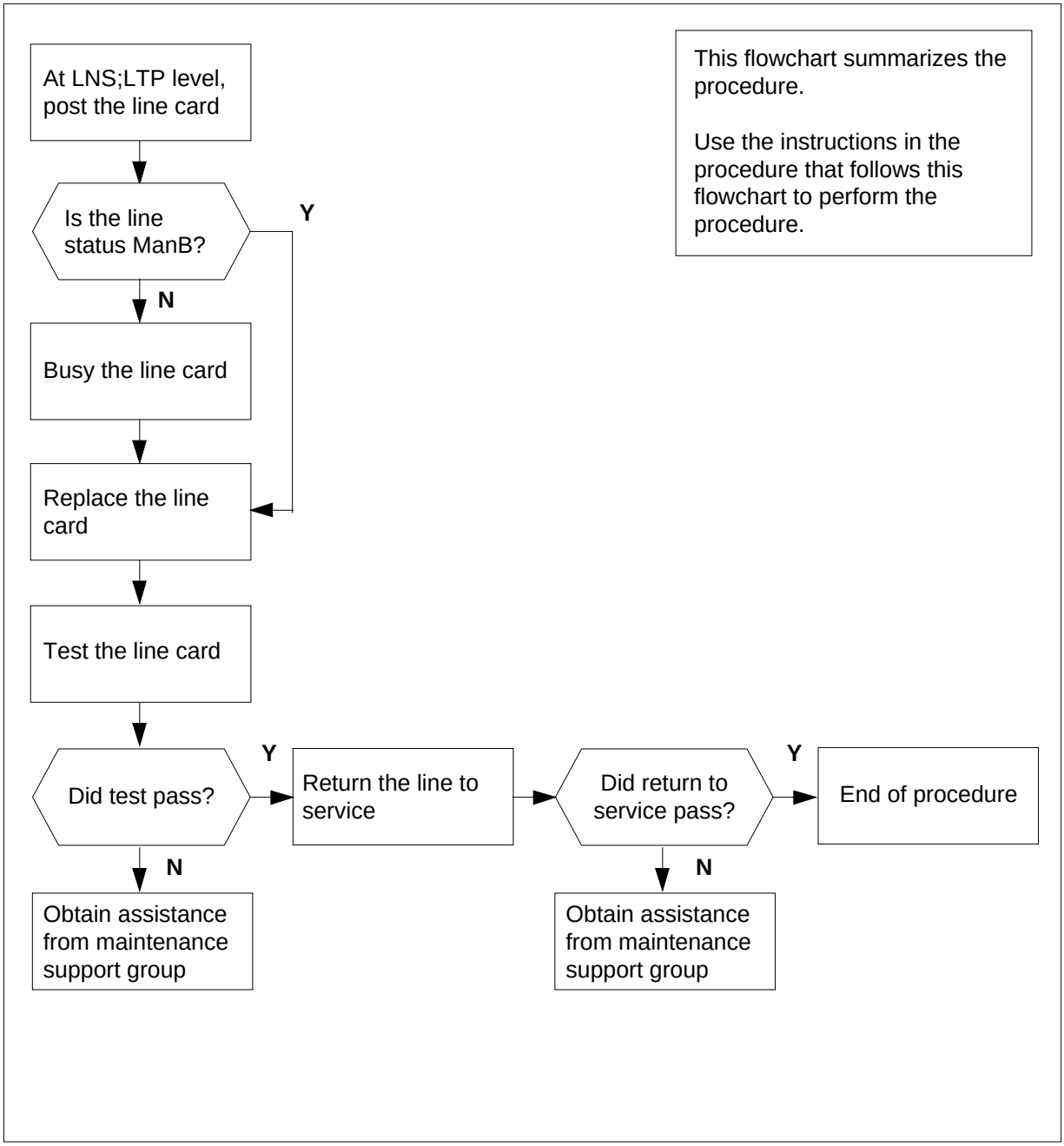

NT6X20 in a STAR or RLD (continued)

Replacing an NT6X20 card in a STAR or RLD

At your current location

1 Get a replacement card. Make sure the replacement card has the same product equipment code (PEC), including suffix, as the card that is to be removed.

At the MAP terminal

2 To access the LTP level of the MAP terminal and post the line associated with the card to be replaced, type

`>MAPCI;MTC;LNS;LTP;POST L site frame unit lsg ckt`

and press the Enter key.

where

site
is the name of the site where the STAR is located

frame
is the frame number of the STAR with the faulty card

unit
is 0 for the STAR

lsg
is the number of the line subgroup with the faulty card (0-35)

ckt
is the number of the circuit associated with the faulty card (0-31)

Example of a MAP response:

```
LCC PTY RNG .....LEN.......... DN   STA F S LTA TE RESULT
RES      REM1 00 0 03 03     7213355 MB
```

3 Check the status of the posted line.

If the line status is	Do
manual busy (ManB)	step 5
not ManB	step 4

4 To busy the line, type

`>BSY`

and press the Enter key.

5 Go to the common replacing a line card procedure in this document. When you have completed the procedure, return to this point.

NT6X20 in a STAR or RLD (end)

At the MAP terminal

6 To test the line card just replaced, type

>DIAG

and press the Enter key.

If DIAG	Do
passes	step 7
fails	step 10

7 To return the line card to service, type

>RTS

and press the Enter key.

If RTS	Do
passes	step 8
fails	step 10

8 Send any faulty cards for repair according to local procedure.

9 Record the following items in office records:

- date the card was replaced
- serial number of the card
- indications that prompted replacement of the card

Go to step 11.

10 Get additional help in replacing this card by contacting the personnel responsible for a higher level of support.

11 You have correctly completed this procedure.

NT6X21 in an IOPAC ILCM

Application

Use this procedure to replace the following card in an International line concentrating module (ILCM).

PEC	Suffixes	Name
NT6X21	AA, AB, AC, AD	Line card type C, Meridian Digital Centrex (MDC), electronic business set

Common procedures

The common replacing a line card procedure is referenced in this procedure.

Action

The following flowchart is a summary of the procedure. To replace the card, use the instructions in the step-action procedure that follows the flowchart.

NT6X21
in an IOPAC ILCM (continued)

Summary of card replacement procedure for NT6X21 card in an ILCM

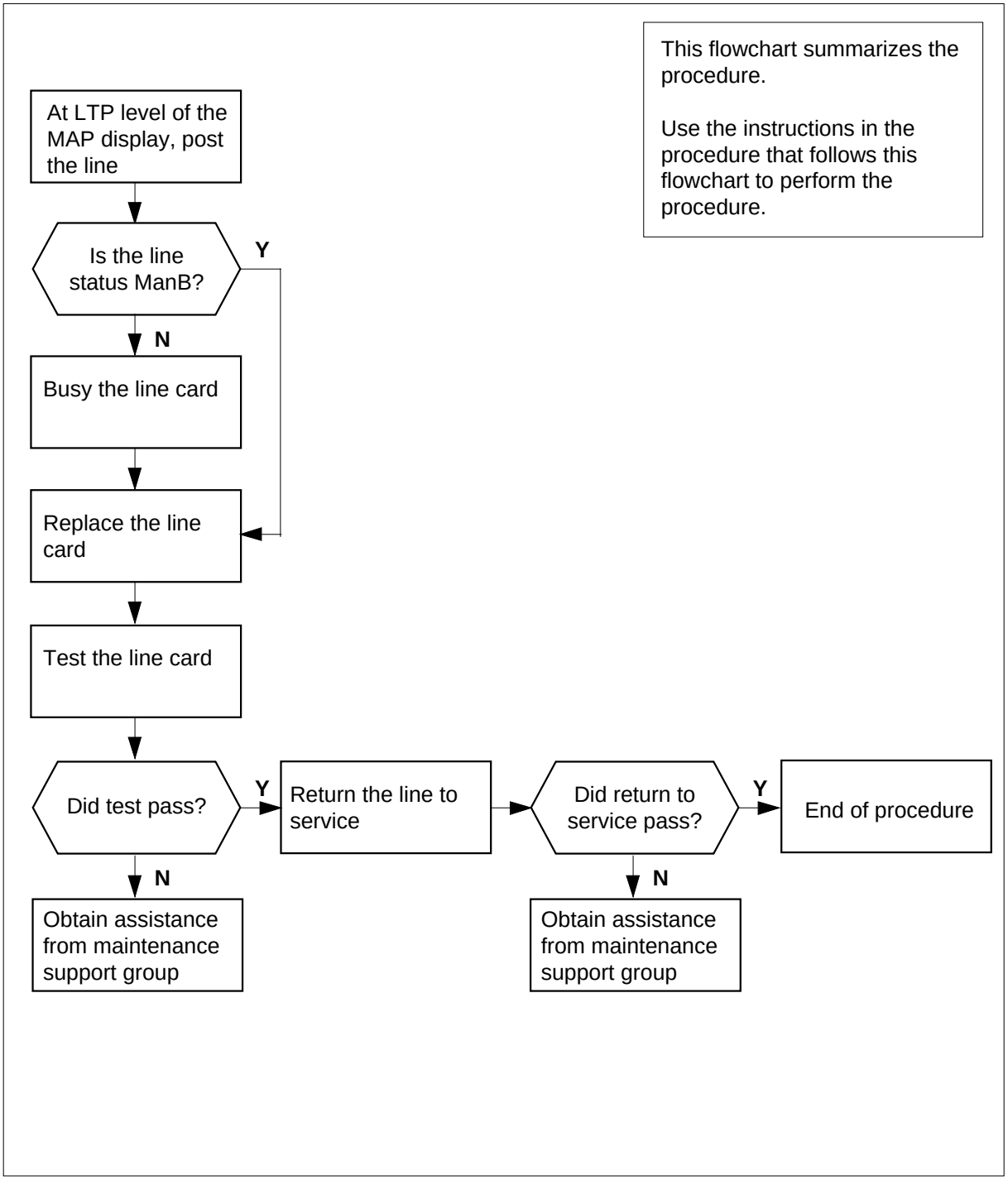

NT6X21 in an IOPAC ILCM (continued)

Replacing an NT6X21 in an ILCM

At your Current Location

1 Obtain a replacement card. Ensure the replacement card has the same product equipment code (PEC), including suffix, as the card to be removed.

2 Make DIP switch changes for the line card.

If the line card code is	Do
AA, AB, AC	step 4
AD	step 3

3 Make DIP switch settings as referenced in the “Maintenance" section of this manual or set them to match the line card being replaced.

At the MAP terminal

4 Access the line test position (LTP) level of the MAP terminal. Post the line associated with the card to be replaced by typing

```
>MAPCI;MTC;LNS;LTP;POST L site lcm lsg ckt
```

and pressing the Enter key.

where

site
is the name of the site where the IOPAC is located

lcm
is the number of the ILCM with the faulty card

lsg
is the number of the line subgroup with the faulty card

ckt
is the number of the circuit associated with the faulty card

Example of a MAP display:

```
LCC PTY RNG .....LEN.......  DN   STA F S LTA TE RESULT
1FR       REM1 00 0 03 03  7213335 MB
```

5 Check the status of the posted line.

If the line status is	Do
manual busy (ManB)	step 7
not ManB	step 6

NT6X21 in an IOPAC ILCM (end)

6 Busy the line by typing

>BSY

and pressing the Enter key.

At the LCM

7 Go to the common replacing a line card procedure in this document. When you have completed the procedure, return to this step.

At the MAP terminal

8 Test the line card just replaced by typing

>DIAG

and pressing the Enter key.

If the DIAG	Do
passed	step 9
failed	step 12

9 Return the line card to service by typing

>RTS

and pressing the Enter key.

If RTS	Do
passed	step 10
failed	step 12

10 Send any faulty cards for repair according to local procedure.

11 Record the following items in office records:

- date the card was replaced
- serial number of the card
- symptoms that prompted replacement of the card

Go to step 13.

12 Obtain further assistance in replacing this card by contacting the personnel responsible for higher level of support.

13 You have successfully completed this procedure.

NT6X21 in an OPM

Application

Use this procedure to replace the following card in an OPM.

PEC	Suffixes	Name
NT6X21	AA, AB, AC, AD	Line card type C, Meridian Digital Centrex (MDC), electronic business set

Common procedures

The common replacing a line card procedure is referenced in this procedure.

Action

The following flowchart is a summary of the procedure. To replace the card, use the instructions in the procedure that follows the flowchart.

NT6X21
in an OPM (continued)

Summary of replacing an NT6X21 card in an OPM

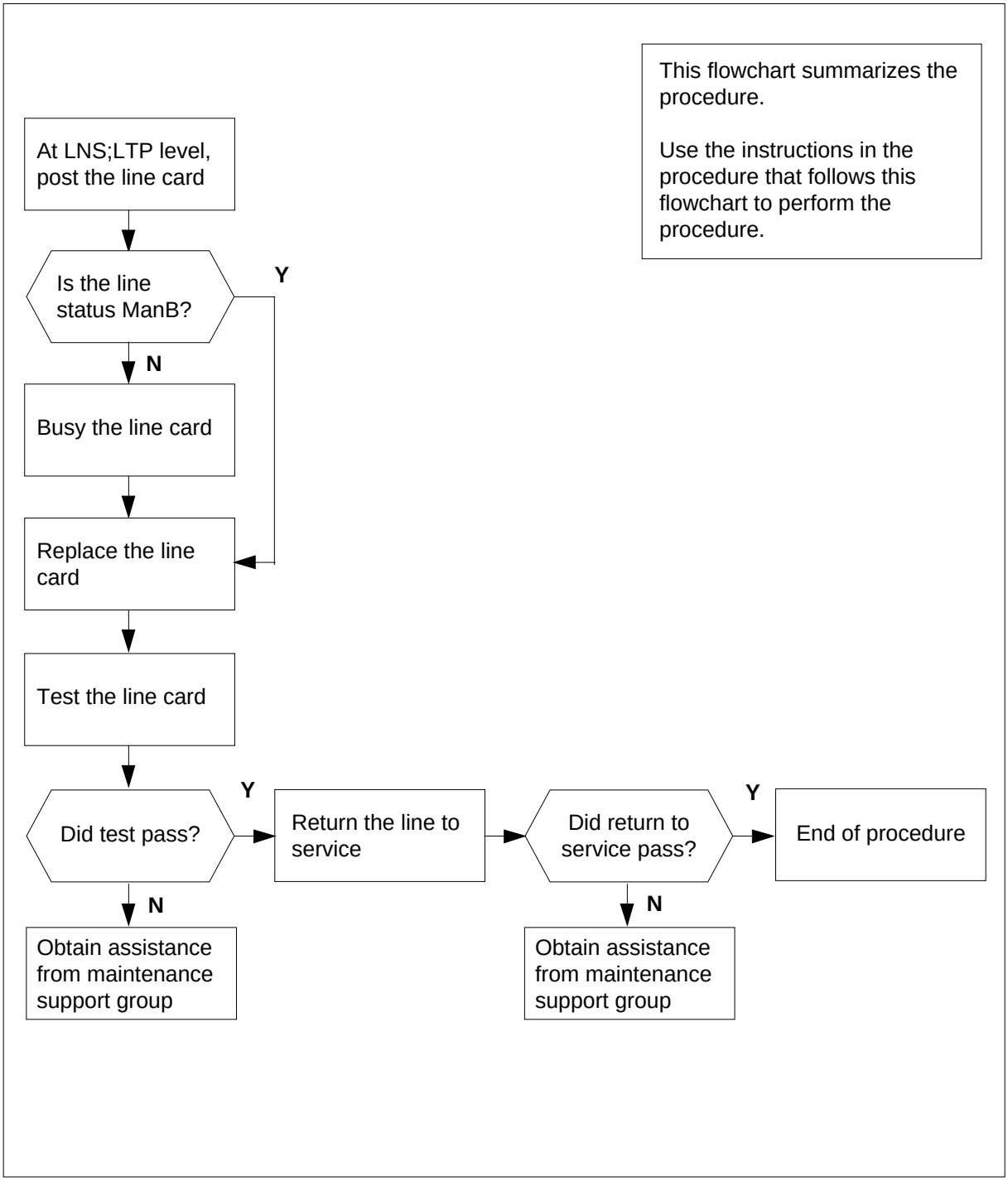

Replacing an NT6X21 card in an OPM

At your current location

1 Obtain a replacement card. Ensure the replacement card has the same product equipment code (PEC), including suffix, as the card that is to be removed.

2 Make DIP switch changes for the line card.

If the line card code is	Do
AA, AB, AC	step 4
AD	step 3

3 Make DIP switch settings as referenced in the *Maintenance* section of this manual.

At the MAP terminal

4 Access the LTP level of the MAP terminal and post the line associated with the card to be replaced by typing

```
>MAPCI;MTC;LNS;LTP;POST L site lcm lsg ckt
```

and pressing the Enter key.

where

site
is the name of the site where the OPM is located

lcm
is the number of the OPM with the faulty card

lsg
is the number of the line subgroup with the faulty card

ckt
is the number of the circuit associated with the faulty card

Example of a MAP response:

```
LCC PTY RNG .....LEN.......... DN   STA F S LTA TE RESULT
1FR      REM1 00 0 03 03     7213355 MB
```

5 Check the status of the posted line.

If the line status is	Do
manual busy (ManB)	step 7
not ManB	step 6

NT6X21 in an OPM (end)

6 Busy the line by typing

>BSY

and pressing the Enter key.

At the OPM cabinet

7 Go to the common replacing a line card procedure in this document. When you have completed the procedure, return to this point.

At the MAP terminal

8 Test the line card just replaced by typing

>DIAG

and pressing the Enter key.

If the DIAG	Do
passed	step 9
failed	step 12

9 Return the line card to service by typing

>RTS

and pressing the Enter key.

If RTS	Do
passed	step 10
failed	step 12

10 Send any faulty cards for repair according to local procedure.

11 Record the following items in office records:

- date the card was replaced
- serial number of the card
- symptoms that prompted replacement of the card

Go to step 13.

12 Obtain further assistance in replacing this card by contacting the personnel responsible for higher level of support.

13 You have successfully completed this procedure.

NT6X21 in an RLCM

Application

Use this procedure to replace the following card in an RLCM.

PEC	Suffixes	Name
NT6X21	AA, AB, AC, AD	Line card type C, Meridian Digital Centrex (MDC), electronic business set

Common procedures

The common replacing a line card procedure is referenced in this procedure.

Action

The following flowchart is a summary of the procedure. To replace the card, use the instructions in the procedure that follows the flowchart.

NT6X21 in an RLCM (continued)

Summary of replacing an NT6X21 card in an RLCM

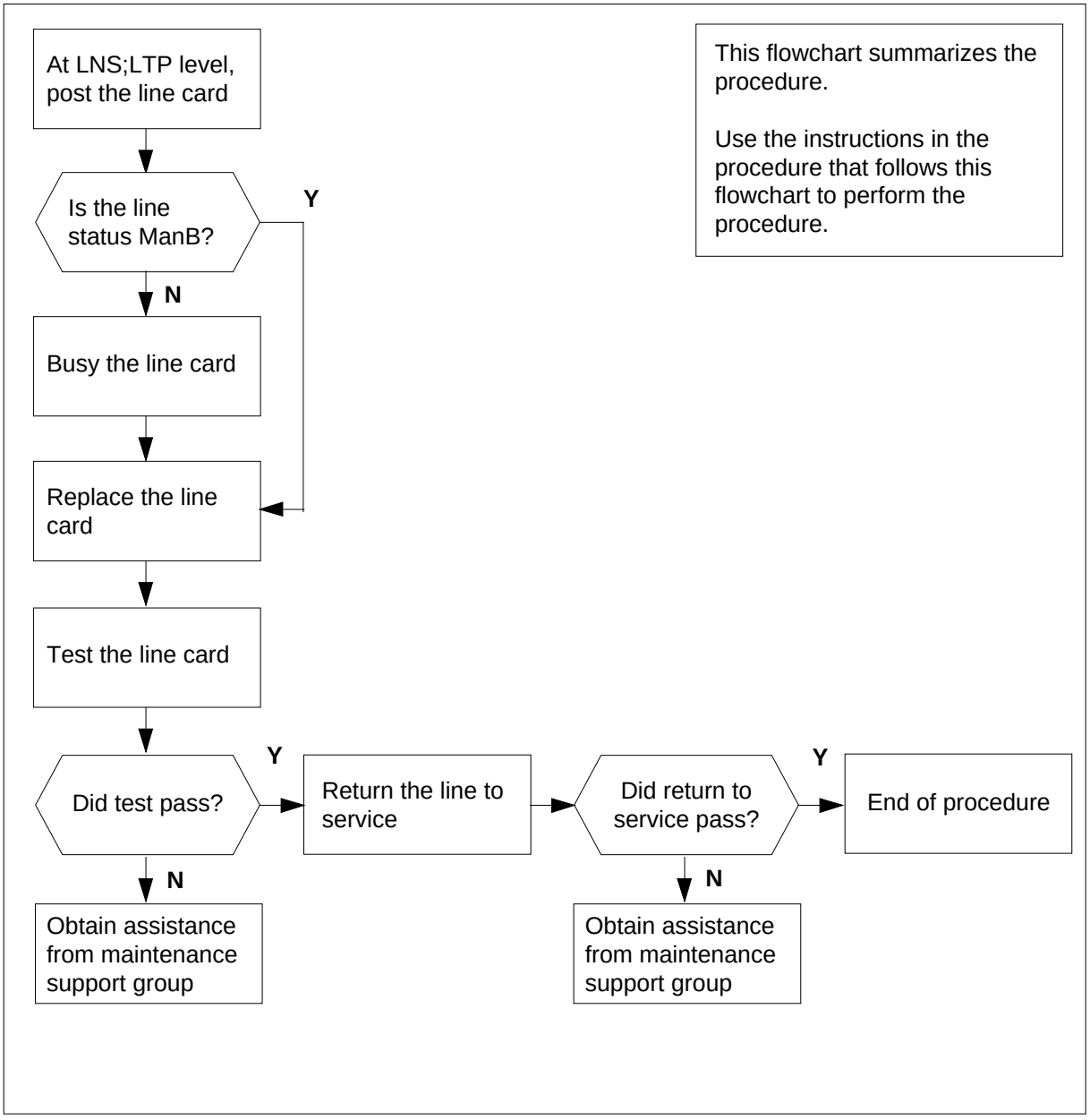

Replacing an NT6X21 card in an RLCM

At your current location

1 Obtain a replacement card. Ensure the replacement card has the same product equipment code (PEC), including suffix, as the card that is to be removed.

2 Make DIP switch changes for the line card.

If the line card code is	Do
AA, AB, AC	step 4
AD	step 3

3 Make DIP switch settings as referenced in the *Maintenance* section of this manual.

At the MAP terminal

4 Access the LTP level of the MAP terminal and post the line associated with the card to be replaced by typing

```
>MAPCI;MTC;LNS;LTP;POST L site lcm lsg ckt
```

and pressing the Enter key.

where

site
is the name of the site where the RLCM is located

lcm
is the number of the RLCM with the faulty card

lsg
is the number of the line subgroup with the faulty card

ckt
is the number of the circuit associated with the faulty card

Example of a MAP response:

```
LCC PTY RNG .....LEN.......... DN   STA F S LTA TE RESULT
1FR      REM1 00 0 03 03     7213355 MB
```

5 Check the status of the posted line.

If the line status is	Do
manual busy (ManB)	step 7
not ManB	step 6

NT6X21 in an RLCM (end)

6 Busy the line by typing

>BSY

and pressing the Enter key.

At the RLCM site

7 Go to the common replacing a line card procedure in this document. When you have completed the procedure, return to this point.

At the MAP terminal

8 Test the line card just replaced by typing

>DIAG

and pressing the Enter key.

If the DIAG	Do
passed	step 9
failed	step 12

9 Return the line card to service by typing

>RTS

and pressing the Enter key.

If RTS	Do
passed	step 10
failed	step 12

10 Send any faulty cards for repair according to local procedure.

11 Record the following items in office records:

- date the card was replaced
- serial number of the card
- symptoms that prompted replacement of the card

Go to step 13.

12 Obtain further assistance in replacing this card by contacting the personnel responsible for higher level of support.

13 You have successfully completed this procedure.

NT6X21 in an RLCM-EDC LCM

Application

Use this procedure to replace a card in the shelves or frames as identified in the following table.

PEC	Suffixes	Cardname	Shelf/frame name
NT6X21	AA, AB, AC	Line card type C, Meridian Digital Centrex (MDC), electronic business set	LCM/RLCC

If you cannot identify the PEC, suffix, and shelf or frame for the card you want to replace, refer to the Index. The maintenance manual index contains a list of cards, shelves, and frames.

Common procedures

The common replacing a line card procedure is referenced in this procedure.

Action

This procedure contains a summary flowchart and a list of steps. Use the flowchart to review the procedure. Follow the steps to perform the procedure.

NT6X21
in an RLCM-EDC LCM (continued)

Summary of replacing an NT6X21 card in LCM

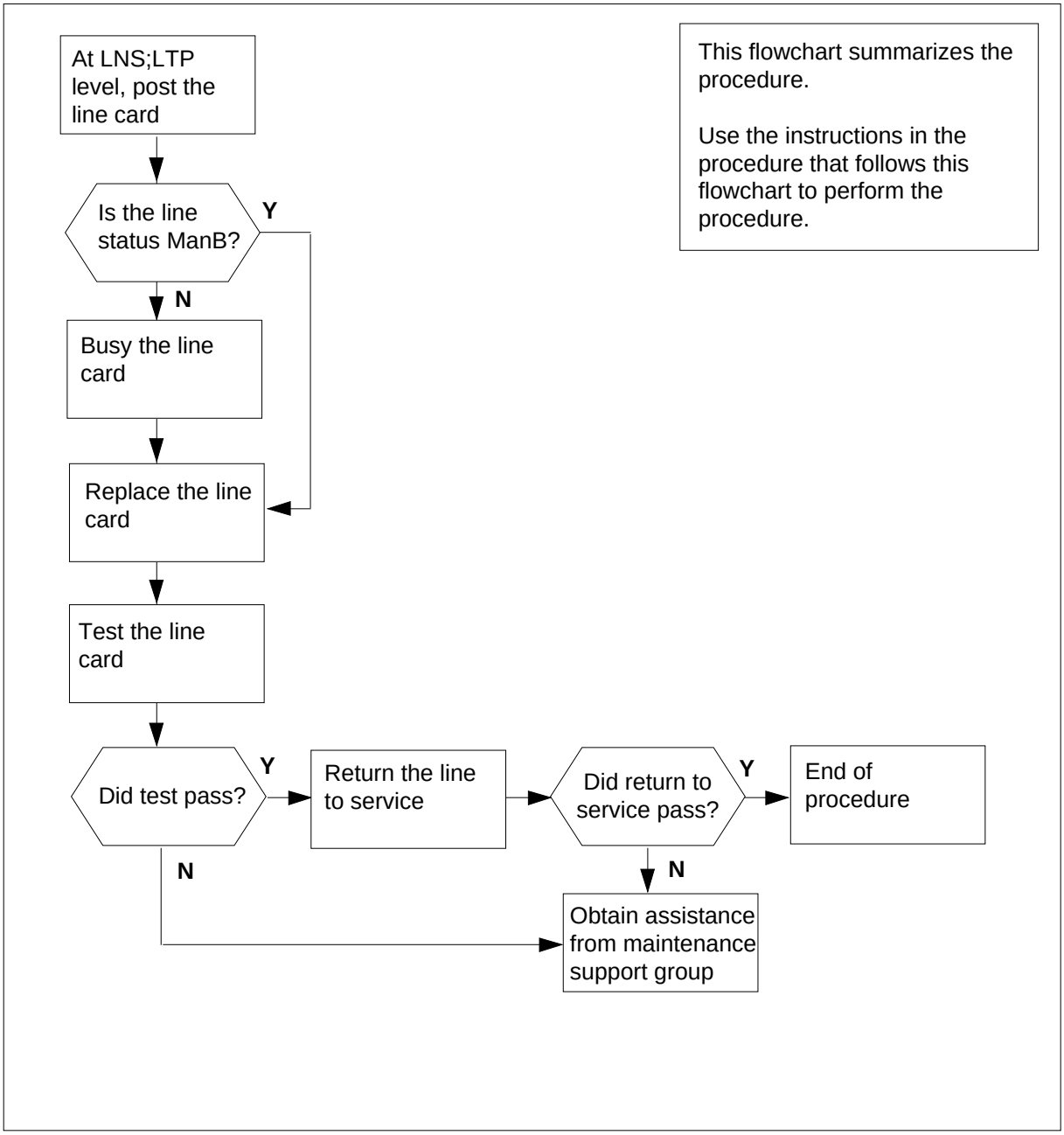

Replacing an NT6X21 card in an LCM

At your current location

1 Obtain a replacement card. Make sure the replacement card has the same product equipment code (PEC), and PEC suffix, as the removed card.

At the MAP terminal

2 To access the LTP level of the MAP terminal and post the line, type

`>MAPCI;MTC;LNS;LTP;POST L site lcm lsg ckt`

and press the Enter key.

where

site
is the name of the site and the location of the RLCM-EDC

lcm
is the number of the RLCM-EDC LCM with the defective card

lsg
is the number of the line subgroup with the defective card

ckt
is the number of the circuit that associates with the defective card

Example of a MAP response:

```
LCC PTY RNG .....LEN.......... DN   STA F S LTA TE RESULT
PPHON      REM1 00 0 03 03     7213355 MB
```

3 Check the status of the posted line.

If the line status is	Do
manual busy (ManB)	step 5
not ManB	step 4

4 To busy the line, type

`>BSY`

and press the Enter key.

At the RLCC cabinet

5 Go to the common replacing a line card procedure in this document. When the procedure is complete, return to this point.

NT6X21 in an RLCM-EDC LCM (end)

At the MAP terminal

6 To test the removed line card, type

>DIAG

and press the Enter key.

If the DIAG	Do
passes	step 7
fails	step 10

7 To return the line card to service, type

>RTS

and press the Enter key.

If RTS	Do
passes	step 8
fails	step 10

8 To send defective cards for repair, follow the local procedures.

9 Record information for office records, as follows:

- date of card replacement
- serial number of the card
- details and reason for replacement of the card

Go to step 11.

10 For additional help, contact the next level of maintenance.

11 The procedure is complete.

NT6X21 in an RSC-S (DS-1) Model A LCME

Application

Use this procedure to replace an NT6X21 card in an RSC-S LCME.

PEC	Suffixes	Name
NT6X21	AA, AB, AC	Line Card Type C (IBN Electronic Business Set)
NT6X21	AD	Enhanced EBS Line Card for Universal Digital Loop Carriers

Common procedures

None

Action

The following flowchart is only a summary of the procedure. To replace the card, use the instructions in the procedure that follows the flowchart.

NT6X21
in an RSC-S (DS-1) Model A LCME (continued)

Summary of card replacement procedure for an NT6X21 card in RSC-S LCME

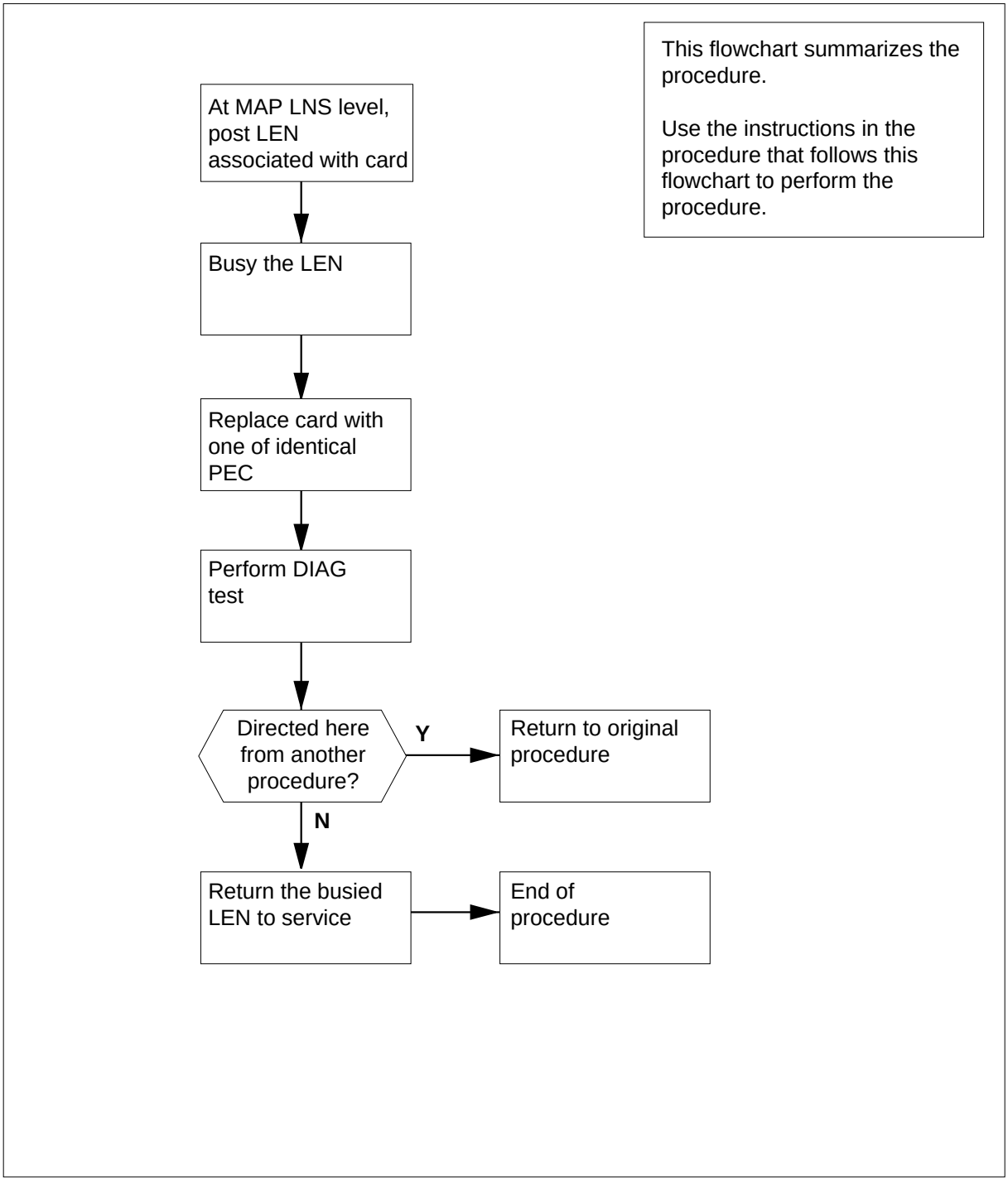

Replacing an NT6X21 card in an RSC-S LCME

At your Current Location

1 Proceed only if you have been directed to this card replacement procedure from a step in a maintenance procedure, are using the procedure for verifying or accepting cards, or have been directed to this procedure by your maintenance support group.

2 Obtain an NT6X21 replacement card. Ensure the replacement card has the same product equipment code (PEC), including suffix, as the card that is to be removed.

At the MAP terminal

3 Post the LEN of the card to be replaced by typing

```
>mapci;mtc;lns;ltp;post l site lcme_no unit_no lsg_no ckt_no
```

and pressing the Enter key.

where

site
is the location name of the LCME with the faulty card

lcme_no
is the number of the LCME with the faulty card

unit_no
is the number of the LCME unit with the faulty card

lsg_no
is the number of the LSG with the faulty card

ckt_no
is the number of the circuit associated with the faulty card

Example of a MAP display:

NT6X21
in an RSC-S (DS-1) Model A LCME (continued)

```
 CM    MS    IOD    Net    PM    CCS    LNS    Trks    Ext    Appl
 .      .     .       .     .      .       .      .       .      .

LTP
 0 Quit     Post       DELQ       BUSYQ        PREFIX
 2 Post_
 3          LCC PTY RNG....LEN......    DN   STA F S LTA TE RESULT
 4          CKT TYPE FL    HOST 00 0 03 03  NO DIRN  IDL
 5 BSY
 6 RTS
 7 DIAG
 8
 9 AIMStat
10 CKTLOC
11 Hold
12 Next_
13
14
15
16 Prefix
17 LCO
18 Level
```

4 Busy the NT6X21 line card by typing

>BSY

and pressing the Enter key.

Example of a MAP display:

```
 CM    MS    IOD    Net    PM    CCS    LNS    Trks    Ext    Appl
 .      .      .      .     .      .      .       .      .      .

LTP
 0 Quit    Post       DELQ       BUSYQ        PREFIX
 2 Post_
 3         LCC PTY RNG....LEN......  DN     STA F S LTA TE RESULT
 4         CKT TYPE FL  HOST 00 0 03 03 NO DIRN  MB
 5 BSY
 6 RTS
 7 DIAG
 8
 9 AIMStat
10 CKTLOC
11 Hold
12 Next_
13
14
15
16 Prefix
17 LCO
18 Level
```

NT6X21
in an RSC-S (DS-1) Model A LCME (continued)

At the LCE frame

5

WARNING
Card damage—transport
Take the following precautions to protect circuit cards from electrical and mechanical damage during transport:

When handling a circuit card not in an electrostatic discharge (ESD) protective container, stand on a conductive floor mat and wear a wriststrap connected, through a 1-megohm resistor, to a suitably grounded object, such as a metal workbench or a DMS switch frame (Northern Telecom [Nortel] Corporate Standard 5028). Store and transport circuit cards in an ESD protective container.

WARNING
Static electricity damage
Before removing any cards, put on a wriststrap and connect it to the wriststrap grounding point on the left side of the frame supervisory panel (FSP) of the LCME. This protects the equipment against damage caused by static electricity.

DANGER
Equipment damage
Take the following precautions when removing or inserting a card:

1. Do not apply direct pressure to the components.
2. Do not force the cards into the slots.

DANGER
Hot materials
Exercise care when handling the line card. The line feed resistor may be very hot.

NT6X21
in an RSC-S (DS-1) Model A LCME (continued)

CAUTION
Special tools required
Card shrouds and removal tools are required for removing cards from the line drawers. For descriptions of these tools, refer to the following notes.

Put on a wriststrap.

Note: Card shrouds are required for inserting or removing cards in line drawers. Two sizes are available for use with 3-inch and 6-inch cards, as shown in the following table.

Line card insertion / withdrawal tool for	Apparatus code	Common product code
3-inch cards	QTH56A	A0298291
6-inch cards	QTH58A	A0313317

Note: Card removal tools are required for removing cards from line drawers. Two sizes are available, as shown in the following table.

Card removal tool for	Apparatus code	Common product code
3—4 inch cards	QTH57A	A0298292
Note: For 4-inch or larger cards, use the large grip tool ITA9953.		

6 Prepare to remove the faulty card by opening the line drawer and following these substeps:

a Face the drawer shelf and grasp the handle at the bottom of the drawer with your right hand.

b Push up on the drawer latch with your thumb and pull the drawer out until fully withdrawn. It is fully withdrawn when the drawer stop, at the top, prevents further travel.

c Maintain a slight pull on the handle and lift the faceplate of the drawer approximately 2.5 cm (1.0 in).

d While holding the drawer in this position, push the bottom of the drawer, nearest the shelf with your left hand, to a position about 1.0 cm (0.5 in) to the right.

e Hold the drawer in this position with your left hand and lower the faceplate of the drawer by releasing the grip of your right hand.

NT6X21
in an RSC-S (DS-1) Model A LCME (continued)

f Ensure a card shroud and line card extractor are available.

7 Remove the line card to be replaced by following these substeps:

a Slide a card shroud over the card to be removed and an adjacent card. If there is not an adjacent card on either side, do not use the card shroud.

b Grasp the edge of the card with a line card extractor at a point midway between the top and bottom edges. Hold the extractor in your right hand.

c Squeeze the handles of the extractor together to grasp the card tightly.

d Hold the front cover of the line drawer to steady it using your left hand.

e Pull the extractor away from the drawer until the card becomes unplugged from its socket on the drawer backplane.

f Continue pulling the card with the extractor until the card is clear of the shroud.

g Insert the card removed into the ESD container and store using local procedures.

8 Replace the faulty card using the following substeps:

a Remove the replacement card from the ESD container.

If the line card suffix is	Do
AA, AB, or AC	step 14
AD	step 10

NT6X21
in an RSC-S (DS-1) Model A LCME (continued)

b Make DIP switch changes to the replacement NT6X21AD card to match DIP switch settings of the card being replaced, or as defined in the following table.

Recommended NT6X21AD S1 DIP switch settings (Sheet 1 of 2)

Recommended application	D/A voice S1	Balance S2	Signaling levels S3 and S4					
	Switch positionON OFF	Switch positionON OFF			Both ON	S4 ON	S3 ON	Both OFF
	0dB	-3.5 dB	NL	9+2	1.3 Vpp	0.8 Vpp	0.6 Vpp	0.14 Vpp
P-phone sets long loop: 19-24dB EML	X		X		X			
P-phone sets medium loop: 17-19dB EML	X		X			X		
P-phone sets medium loop: 4-17dB EML		X		X			X	
P-phone sets short loops: 0-4dB EML		X		X				X
Nortel UDLCs		X	X					X
Other vendors UDLCs	X			X			X	

NT6X21 in an RSC-S (DS-1) Model A LCME (continued)

Recommended NT6X21AD S1 DIP switch settings (Sheet 2 of 2)

Recommended application	D/A voice S1	Balance S2	Signaling levels S3 and S4					
	Switch position ON OFF	Switch position ON OFF			Both ON	S4 ON	S3 ON	Both OFF
	0dB	-3.5 dB	NL	9+2	1.3 Vpp	0.8 Vpp	0.6 Vpp	0.14 Vpp
6X21AC equivalent mode ***Note:*** dB=decibel, NL=nonloaded, Vpp=voltage peak to peak, EML=estimated measured loss, as defined in NTP 297-2011-180, BCS35 version 01.02		X	X		X			

c Slide the card in the shroud guide slots toward the drawer backplane.

d Hold the front cover of the line drawer with your left hand to steady it.

e Grasp the top and bottom edges of the card with the fingers of your right hand.

f Push the card toward the backplane until it plugs fully into the backplane socket.

9 Use the following information to determine where to proceed.

If you entered this procedure from	Do
alarm clearing procedures	step 14
other	step 10

NT6X21 in an RSC-S (DS-1) Model A LCME (end)

At the MAP terminal

10 Test the NT6X21 line card by typing

`>DIAG`

and pressing the Enter key.

If DIAG	Do
passed	step 11
failed	step 15

11 Return the NT6X21 card to service by typing

`>RTS`

and pressing the Enter key.

If RTS	Do
passed	step 12
failed	step 15

12 Send any faulty cards for repair according to local procedure.

13 Record the date the card was replaced, the serial number of the card, and the symptoms that prompted replacement of the card. Go to step16.

14 Return to the procedure that directed you to this procedure. If necessary, go to the point where a faulty card list was produced, identify the next faulty card on the list, and go to the appropriate card replacement procedure for that card in this manual.

15 Obtain further assistance in replacing this card by contacting operating company maintenance personnel.

16 You have successfully completed this procedure. Return to the maintenance procedure that directed you to this card replacement procedure and continue as directed.

NT6X21 in an RSC-S (DS-1) Model B LCME

Application

Use this procedure to replace an NT6X21 card in an RSC-S LCME.

PEC	Suffixes	Name
NT6X21	AA, AB, AC	Line Card Type C (IBN Electronic Business Set)
NT6X21	AD	Enhanced EBS Line Card for Universal Digital Loop Carriers

Common procedures

None

Action

The following flowchart is only a summary of the procedure. To replace the card, use the instructions in the procedure that follows the flowchart.

NT6X21
in an RSC-S (DS-1) Model B LCME (continued)

Summary of card replacement procedure for an NT6X21 card in RSC-S LCME

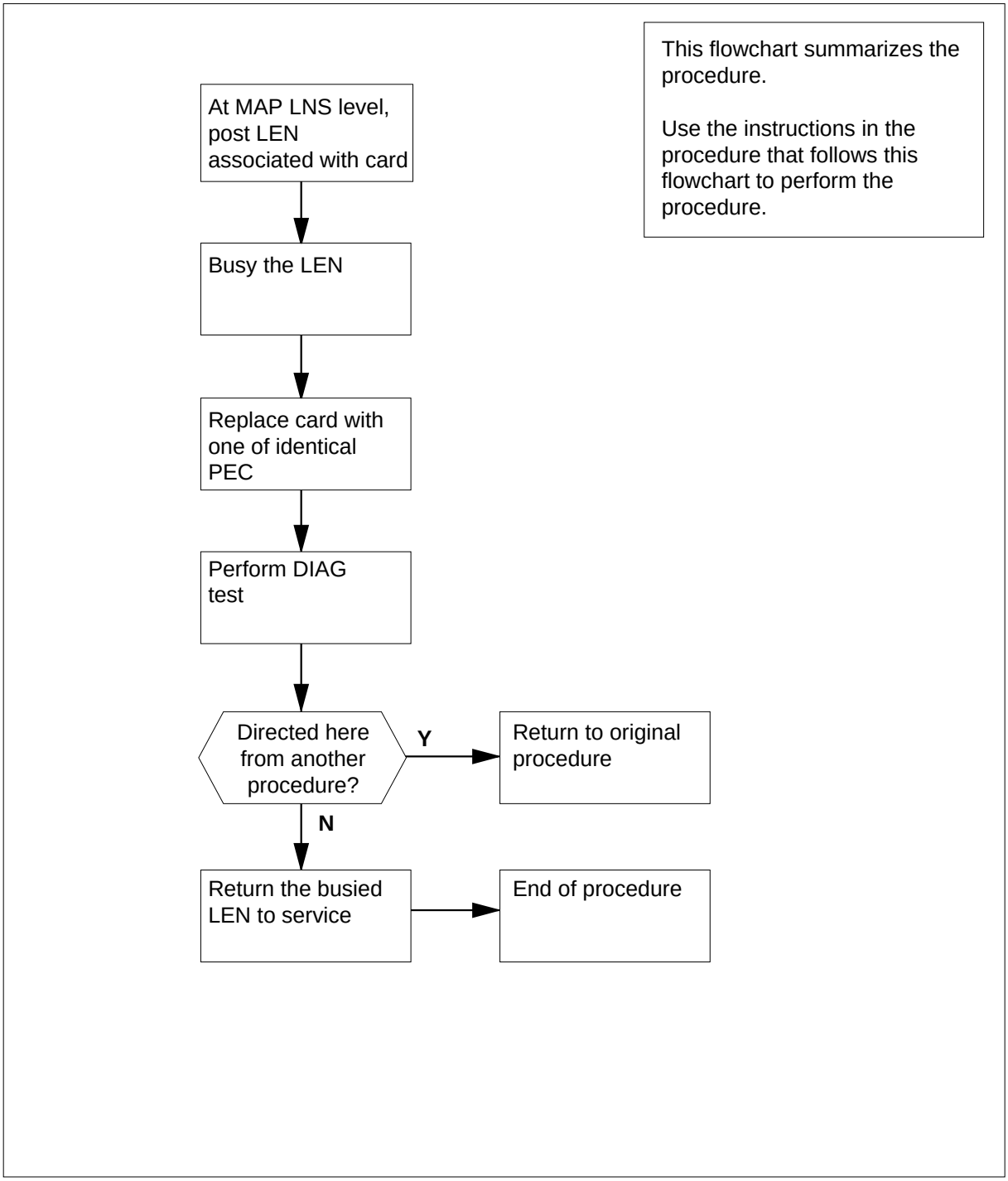

NT6X21
in an RSC-S (DS-1) Model B LCME (continued)

Replacing an NT6X21 card in an RSC-S LCME

At your Current Location

1 Proceed only if you have been directed to this card replacement procedure from a step in a maintenance procedure, are using the procedure for verifying or accepting cards, or have been directed to this procedure by your maintenance support group.

2 Obtain an NT6X21 replacement card. Ensure the replacement card has the same product equipment code (PEC), including suffix, as the card that is to be removed.

At the MAP terminal

3 Post the LEN of the card to be replaced by typing

```
>mapci;mtc;lns;ltp;post l site lcme_no unit_no lsg_no ckt_no
```

and pressing the Enter key.

where

site
is the location name of the LCME with the faulty card

lcme_no
is the number of the LCME with the faulty card

unit_no
is the number of the LCME unit with the faulty card

lsg_no
is the number of the LSG with the faulty card

ckt_no
is the number of the circuit associated with the faulty card

Example of a MAP display:

NT6X21
in an RSC-S (DS-1) Model B LCME (continued)

```
 CM    MS    IOD    Net    PM    CCS    LNS    Trks    Ext    Appl
 .      .     .      .     .      .      .      .       .      .

LTP
 0 Quit     Post       DELQ       BUSYQ        PREFIX
 2 Post_
 3          LCC PTY RNG....LEN......    DN   STA F S LTA TE RESULT
 4          CKT TYPE FL    HOST 00 0 03 03  NO DIRN  IDL
 5 BSY
 6 RTS
 7 DIAG
 8
 9 AIMStat
10 CKTLOC
11 Hold
12 Next_
13
14
15
16 Prefix
17 LCO
18 Level
```

4 Busy the NT6X21 line card by typing

>BSY

and pressing the Enter key.

Example of a MAP display:

```
 CM    MS    IOD    Net    PM    CCS    LNS    Trks    Ext    Appl
 .      .     .      .     .      .      .      .       .      .

LTP
 0 Quit    Post       DELQ       BUSYQ        PREFIX
 2 Post_
 3         LCC PTY RNG....LEN......  DN     STA F S LTA TE RESULT
 4         CKT TYPE FL  HOST 00 0 03 03 NO DIRN  MB
 5 BSY
 6 RTS
 7 DIAG
 8
 9 AIMStat
10 CKTLOC
11 Hold
12 Next_
13
14
15
16 Prefix
17 LCO
18 Level
```

NT6X21
in an RSC-S (DS-1) Model B LCME (continued)

At the LCE frame

5

WARNING
Card damage—transport
Take the following precautions to protect circuit cards from electrical and mechanical damage during transport:

When handling a circuit card not in an electrostatic discharge (ESD) protective container, stand on a conductive floor mat and wear a wriststrap connected, through a 1-megohm resistor, to a suitably grounded object, such as a metal workbench or a DMS switch frame (Northern Telecom [Nortel] Corporate Standard 5028). Store and transport circuit cards in an ESD protective container.

WARNING
Static electricity damage
Before removing any cards, put on a wriststrap and connect it to the wriststrap grounding point on the left side of the modular supervisory panel (MSP) of the LCME. This protects the equipment against damage caused by static electricity.

DANGER
Equipment damage
Take the following precautions when removing or inserting a card:

1. Do not apply direct pressure to the components.
2. Do not force the cards into the slots.

DANGER
Hot materials
Exercise care when handling the line card. The line feed resistor may be very hot.

NT6X21
in an RSC-S (DS-1) Model B LCME (continued)

CAUTION
Special tools required
Card shrouds and removal tools are required for removing cards from the line drawers. For descriptions of these tools, refer to the following notes.

Put on a wriststrap.

Note: Card shrouds are required for inserting or removing cards in line drawers. Two sizes are available for use with 3-inch and 6-inch cards, as shown in the following table.

Line card insertion / withdrawal tool for	Apparatus code	Common product code
3-inch cards	QTH56A	A0298291
6-inch cards	QTH58A	A0313317

Note: Card removal tools are required for removing cards from line drawers. Two sizes are available, as shown in the following table.

Card removal tool for	Apparatus code	Common product code
3—4 inch cards	QTH57A	A0298292
Note: For 4-inch or larger cards, use the large grip tool ITA9953.		

6 Prepare to remove the faulty card by opening the line drawer and following these substeps:

a Face the drawer shelf and grasp the handle at the bottom of the drawer with your right hand.

b Push up on the drawer latch with your thumb and pull the drawer out until fully withdrawn. It is fully withdrawn when the drawer stop, at the top, prevents further travel.

c Maintain a slight pull on the handle and lift the faceplate of the drawer approximately 2.5 cm (1.0 in).

d While holding the drawer in this position, push the bottom of the drawer, nearest the shelf with your left hand, to a position about 1.0 cm (0.5 in) to the right.

e Hold the drawer in this position with your left hand and lower the faceplate of the drawer by releasing the grip of your right hand.

NT6X21
in an RSC-S (DS-1) Model B LCME (continued)

f Ensure a card shroud and line card extractor are available.

7 Remove the line card to be replaced by following these substeps:

a Slide a card shroud over the card to be removed and an adjacent card. If there is not an adjacent card on either side, do not use the card shroud.

b Grasp the edge of the card with a line card extractor at a point midway between the top and bottom edges. Hold the extractor in your right hand.

c Squeeze the handles of the extractor together to grasp the card tightly.

d Hold the front cover of the line drawer to steady it using your left hand.

e Pull the extractor away from the drawer until the card becomes unplugged from its socket on the drawer backplane.

f Continue pulling the card with the extractor until the card is clear of the shroud.

g Insert the card removed into the ESD container and store using local procedures.

8 Replace the faulty card using the following substeps:

a Remove the replacement card from the ESD container.

If the line card suffix is	Do
AA, AB, or AC	step c
AD	step b

NT6X21
in an RSC-S (DS-1) Model B LCME (continued)

b Make DIP switch changes to the replacement NT6X21AD card to match DIP switch settings of the card being replaced, or as defined in the following table.

Recommended NT6X21AD S1 DIP switch settings

	D/A voice S1		Balance S2		Signaling levels S3 and S4			
	Switch position		Switch position		Both			Both
	ON	OFF	ON	OFF	ON	S4 ON	S3 ON	OFF
Recommended application	**0dB**	**-3.5 dB**	**NL**	**9+2**	**1.3 Vpp**	**0.8 Vpp**	**0.6 Vpp**	**0.14 Vpp**
P-phone sets long loop: 19-24dB EML	X		X		X			
P-phone sets medium loop: 17-19dB EML	X		X			X		
P-phone sets medium loop: 4-17dB EML		X		X			X	
P-phone sets short loops: 0-4dB EML		X		X				X
Nortel UDLCs		X	X					X
Other vendors UDLCs	X			X			X	
6X21AC equivalent mode		X	X		X			

Note: dB=decibel, NL=nonloaded, Vpp=voltage peak to peak, EML=estimated measured loss, as defined in NTP 297-2011-180, BCS35 version 01.02

c Slide the card in the shroud guide slots toward the drawer backplane.

d Hold the front cover of the line drawer with your left hand to steady it.

e Grasp the top and bottom edges of the card with the fingers of your right hand.

f Push the card toward the backplane until it plugs fully into the backplane socket.

NT6X21 in an RSC-S (DS-1) Model B LCME (end)

9 Use the following information to determine where to proceed.

If you entered this procedure from	Do
alarm clearing procedures	step 14
other	step 10

At the MAP terminal

10 Test the NT6X21 line card by typing

>DIAG

and pressing the Enter key.

If DIAG	Do
passed	step 11
failed	step 15

11 Return the NT6X21 card to service by typing

>RTS

and pressing the Enter key.

If RTS	Do
passed	step 12
failed	step 15

12 Send any faulty cards for repair according to local procedure.

13 Record the date the card was replaced, the serial number of the card, and the symptoms that prompted replacement of the card. Go to step16.

14 Return to the procedure that directed you to this procedure. If necessary, go to the point where a faulty card list was produced, identify the next faulty card on the list, and go to the appropriate card replacement procedure for that card in this manual.

15 Obtain further assistance in replacing this card by contacting operating company maintenance personnel.

16 You have successfully completed this procedure. Return to the maintenance procedure that directed you to this card replacement procedure and continue as directed.

NT6X21
in an RSC-S (PCM-30) Model A LCME

Application

Use this procedure to replace an NT6X21 card in an RSC-S LCME.

PEC	Suffixes	Name
NT6X21	AA, AB, AC	Line Card Type C (IBN Electronic Business Set)
NT6X21	AD	Enhanced EBS Line Card for Universal Digital Loop Carriers

Common procedures

None

Action

The following flowchart is only a summary of the procedure. To replace the card, use the instructions in the procedure that follows the flowchart.

NT6X21
in an RSC-S (PCM-30) Model A LCME (continued)

Summary of card replacement procedure for an NT6X21 card in RSC-S LCME

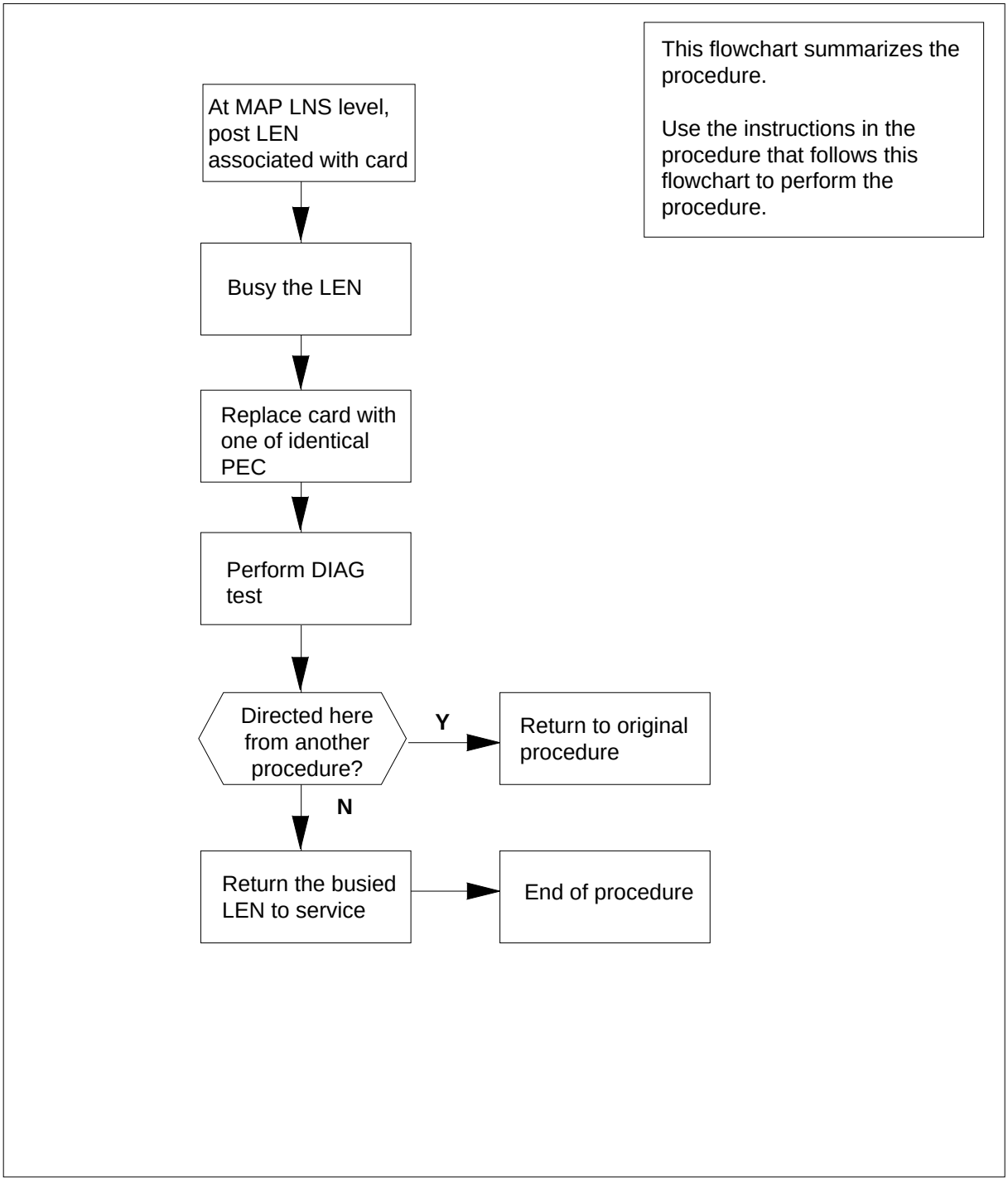

NT6X21
in an RSC-S (PCM-30) Model A LCME (continued)

Replacing an NT6X21 card in an RSC-S LCME

At your Current Location

1 Proceed only if you have been directed to this card replacement procedure from a step in a maintenance procedure, are using the procedure for verifying or accepting cards, or have been directed to this procedure by your maintenance support group.

2 Obtain an NT6X21 replacement card. Ensure the replacement card has the same product equipment code (PEC), including suffix, as the card that is to be removed.

At the MAP terminal

3 Post the LEN of the card to be replaced by typing

```
>mapci;mtc;lns;ltp;post l site lcme_no unit_no lsg_no ckt_no
```

and pressing the Enter key.

where

site
is the location name of the LCME with the faulty card

lcme_no
is the number of the LCME with the faulty card

unit_no
is the number of the LCME unit with the faulty card

lsg_no
is the number of the LSG with the faulty card

ckt_no
is the number of the circuit associated with the faulty card

Example of a MAP display:

```
 CM    MS    IOD    Net    PM    CCS    LNS    Trks    Ext    Appl
 .      .     .       .     .      .       .      .       .      .
LTP
 0 Quit   Post       DELQ       BUSYQ        PREFIX
 2 Post_
 3        LCC PTY RNG....LEN......    DN   STA F S LTA TE RESULT
 4        CKT TYPE FL    HOST 00 0 03 03  NO DIRN  IDL
 5 BSY
 6 RTS
 7 DIAG
 8
 9 AIMStat
10 CKTLOC
11 Hold
12 Next_
13
14
15
16 Prefix
17 LCO
18 Level
```

4 Busy the NT6X21 line card by typing

>BSY

and pressing the Enter key.

Example of a MAP display:

```
 CM    MS    IOD    Net    PM    CCS    LNS    Trks    Ext    Appl
 .      .      .      .     .      .      .       .      .      .
LTP
 0 Quit    Post       DELQ       BUSYQ        PREFIX
 2 Post_
 3         LCC PTY RNG....LEN......  DN     STA F S LTA TE RESULT
 4         CKT TYPE FL  HOST 00 0 03 03 NO DIRN  MB
 5 BSY
 6 RTS
 7 DIAG
 8
 9 AIMStat
10 CKTLOC
11 Hold
12 Next_
13
14
15
16 Prefix
17 LCO
18 Level
```

NT6X21 in an RSC-S (PCM-30) Model A LCME (continued)

At the LCE frame

5

WARNING
Card damage—transport
Take these precautions to protect the circuit cards from electrical and mechanical damage while transporting cards.

When handling a circuit card not in an electrostatic discharge (ESD) protective container, stand on a conductive floor mat and wear a wrist strap connected, through a 1-megohm resistor, to a suitably grounded object, such as a metal workbench or a DMS switch frame (Northern Telecom Corporate Standard 5028).

Store and transport circuit cards in an ESD protective container.

DANGER
Equipment damage
Take these precautions when removing or inserting a card:

1. Do not apply direct pressure to the components.
2. Do not force the cards into the slots.

Put on a wrist strap.

6

DANGER
Hot materials
Exercise care when handling the line card. The line feed resistor may be very hot.

NT6X21
in an RSC-S (PCM-30) Model A LCME (continued)

CAUTION
Special tools required
Card shrouds and removal tools are required for removing cards from the line drawers. For descriptions of these tools, see notes below.

Descriptions of these shrouds are as follows.

Line card insertion / withdrawal tool for	Apparatus code	Common product code
3-inch cards	QTH56A	A0298291
6-inch cards	QTH58A	A0313317

Note: Card removal tools are required for removing cards from line drawers. Two sizes are available. Descriptions of these tools follow.

Card removal tool for	Apparatus code	Common product code
3-4 inch cards	QTH57A	A0298292
Note: For 4-inch or larger cards, use the large grip tool ITA9953.		

Prepare to remove the faulty card by opening the line drawer and following these substeps:

a Face the drawer shelf and grasp the handle at the bottom of the drawer with your right hand.

b Push up on the drawer latch with your thumb and pull the drawer out until fully withdrawn. It is fully withdrawn when the drawer stop, at the top, prevents further travel.

c Maintain a slight pull on the handle and lift the faceplate of the drawer approximately 2.5 cm (1 in).

d While holding the drawer in this position, push the bottom of the drawer, nearest the shelf with your left hand, to a position about 1 cm (.5 in) to the right.

e Hold the drawer in this position with your left hand and lower the faceplate of the drawer by releasing the grip of your right hand.

f Ensure a card shroud and line card extractor are available.

7 Remove the line card to be replaced by following these substeps:

NT6X21
in an RSC-S (PCM-30) Model A LCME (continued)

a Slide a card shroud over the card to be removed and an adjacent card. If there is not an adjacent card on either side, do not use the card shroud.

b Grasp the edge of the card with a line card extractor at a point midway between the top and bottom edges. Hold the extractor in your right hand.

c Squeeze the handles of the extractor together to grasp the card tightly.

d Hold the front cover of the line drawer to steady it using your left hand.

e Pull the extractor away from the drawer until the card becomes unplugged from its socket on the drawer backplane.

f Continue pulling the card with the extractor until the card is clear of the shroud.

g Insert the card removed into the ESD container and store using local procedures.

8 Replace the faulty card using the following substeps:

a Remove the replacement card from the ESD container.

If the line card suffix is	Do
AA, AB, or AC	step c
AD	step b

b Make DIP switch changes to the new replacement NT6X21AD line card to match the DIP switch settings of the card being replaced, or as defined in the following table.

Recommended NT6X21AD S1 DIP switch settings (Sheet 1 of 2)

	D/A voice S1		Balance S2		Signaling level S3 and S4			
	switch position		switch position		Both	Only	Only	Both
	ON	OFF	ON	OFF	ON	S4 ON	S3 ON	OFF
Recommended application	**0dB**	**-3.5dB**	**NL**	**9+2**	**1.3Vpp**	**0.8Vpp**	**0.6Vpp**	**0.14Vpp**
P-phone sets long loop: 19-24dB EML	X		X		X			
P-phone sets medium loop: 17-19dB EML	X		X			X		

Note: dB=decibel, NL = non-loaded, Vpp=voltage peak to peak, EML= estimatedmeasured loss, as defined in NTP 297-2011-180 BCS35 version 01.02

NT6X21
in an RSC-S (PCM-30) Model A LCME (continued)

Recommended NT6X21AD S1 DIP switch settings (Sheet 2 of 2)

	D/A voice S1		Balance S2		Signaling level S3 and S4			
	switch position		switch position		Both	Only	Only	Both
	ON	OFF	ON	OFF	ON	S4 ON	S3 ON	OFF
Recommended application	**0dB**	**-3.5dB**	**NL**	**9+2**	**1.3Vpp**	**0.8Vpp**	**0.6Vpp**	**0.14Vpp**
P-phone sets medium loop: 4-17dB EML		X		X			X	
P-phone sets short loops: 0-4dB EML		X		X				X
Northern Telecom UDLCs		X	X					X
Other vendors UDLCs	X			X			X	
6X21AC equivalent mode		X	X		X			

Note: dB=decibel, NL = non-loaded, Vpp=voltage peak to peak, EML= estimatedmeasured loss, as defined in NTP 297-2011-180 BCS35 version 01.02

c Slide the card in the shroud guide slots toward the drawer backplane.

d Hold the front cover of the line drawer with your left hand to steady it.

e Grasp the top and bottom edges of the card with the fingers of your right hand.

f Push the card toward the backplane until it plugs fully into the backplane socket.

9 Use the following information to determine where to proceed.

If you entered this procedure from	Do
alarm clearing procedures	step 14
other	step 10

NT6X21 in an RSC-S (PCM-30) Model A LCME (end)

At the MAP terminal

10 Test the NT6X21 line card by typing

`>DIAG`

and pressing the Enter key.

If DIAG	Do
passed	step 11
failed	step 15

11 Return the NT6X21 card to service by typing

`>RTS`

and pressing the Enter key.

If RTS	Do
passed	step 12
failed	step 15

12 Send any faulty cards for repair according to local procedure.

13 Record the date the card was replaced, the serial number of the card, and the symptoms that prompted replacement of the card. Go to step16.

14 Return to the procedure that directed you to this procedure. If necessary, go to the point where a faulty card list was produced, identify the next faulty card on the list, and go to the appropriate card replacement procedure for that card in this manual.

15 Obtain further assistance in replacing this card by contacting operating company maintenance personnel.

16 You have successfully completed this procedure. Return to the maintenance procedure that directed you to this card replacement procedure and continue as directed.

NT6X21 in an RSC-S (PCM-30) Model B LCME

Application

Use this procedure to replace an NT6X21 card in an RSC-S LCME.

PEC	Suffixes	Name
NT6X21	AA, AB, AC	Line Card Type C (IBN Electronic Business Set)
NT6X21	AD	Enhanced EBS Line Card for Universal Digital Loop Carriers

Common procedures

None

Action

The following flowchart is only a summary of the procedure. To replace the card, use the instructions in the procedure that follows the flowchart.

NT6X21
in an RSC-S (PCM-30) Model B LCME (continued)

Summary of card replacement procedure for an NT6X21 card in RSC-S LCME

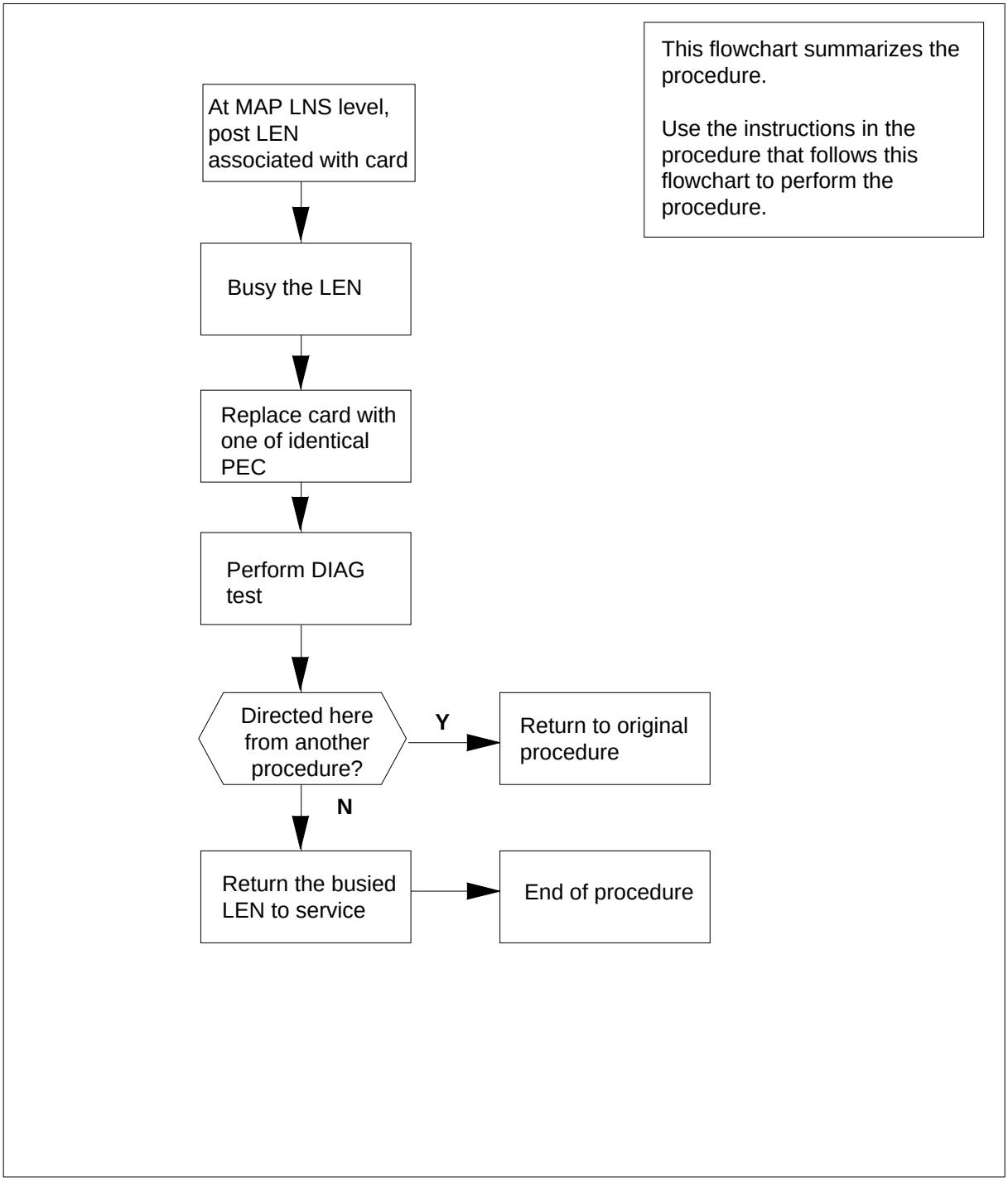

NT6X21
in an RSC-S (PCM-30) Model B LCME (continued)

Replacing an NT6X21 card in an RSC-S LCME

1 Proceed only if you have been directed to this card replacement procedure from a step in a maintenance procedure, are using the procedure for verifying or accepting cards, or have been directed to this procedure by your maintenance support group.

2 Obtain an NT6X21 replacement card. Ensure the replacement card has the same product equipment code (PEC), including suffix, as the card that is to be removed.

At the MAP terminal

3 Post the LEN of the card to be replaced by typing

```
>mapci;mtc;lns;ltp;post l site lcme_no unit_no lsg_no ckt_no
```

and pressing the Enter key.

where

site
is the location name of the LCME with the faulty card

lcme_no
is the number of the LCME with the faulty card

unit_no
is the number of the LCME unit with the faulty card

lsg_no
is the number of the LSG with the faulty card

ckt_no
is the number of the circuit associated with the faulty card

Example of a MAP display:

NT6X21
in an RSC-S (PCM-30) Model B LCME (continued)

```
 CM    MS    IOD    Net    PM    CCS    LNS    Trks    Ext    Appl
 .      .     .       .     .      .       .      .       .      .
LTP
 0 Quit   Post       DELQ       BUSYQ        PREFIX
 2 Post_
 3        LCC PTY RNG....LEN......    DN   STA F S LTA TE RESULT
 4        CKT TYPE FL    HOST 00 0 03 03  NO DIRN  IDL
 5 BSY
 6 RTS
 7 DIAG
 8
 9 AIMStat
10 CKTLOC
11 Hold
12 Next_
13
14
15
16 Prefix
17 LCO
18 Level
```

4 Busy the NT6X21 line card by typing

>BSY

and pressing the Enter key.

Example of a MAP display:

```
 CM    MS    IOD    Net    PM    CCS    LNS    Trks    Ext    Appl
 .      .      .      .     .      .      .       .      .      .
LTP
 0 Quit    Post       DELQ       BUSYQ        PREFIX
 2 Post_
 3         LCC PTY RNG....LEN......  DN     STA F S LTA TE RESULT
 4         CKT TYPE FL  HOST 00 0 03 03 NO DIRN  MB
 5 BSY
 6 RTS
 7 DIAG
 8
 9 AIMStat
10 CKTLOC
11 Hold
12 Next_
13
14
15
16 Prefix
17 LCO
18 Level
```

NT6X21
in an RSC-S (PCM-30) Model B LCME (continued)

At the LCE frame

5

WARNING
Card damage—transport
Take these precautions to protect the circuit cards from electrical and mechanical damage while transporting cards.

When handling a circuit card not in an electrostatic discharge (ESD) protective container, stand on a conductive floor mat and wear a wrist strap connected, through a 1-megohm resistor, to a suitably grounded object, such as a metal workbench or a DMS switch frame (Northern Telecom Corporate Standard 5028).

Store and transport circuit cards in an ESD protective container.

DANGER
Equipment damage
Take these precautions when removing or inserting a card:

1. Do not apply direct pressure to the components.
2. Do not force the cards into the slots.

Put on a wrist strap.

6

DANGER
Hot materials
Exercise care when handling the line card. The line feed resistor may be very hot.

CAUTION
Special tools required
Card shrouds and removal tools are required for removing cards from the line drawers. For descriptions of these tools, see notes below.

NT6X21
in an RSC-S (PCM-30) Model B LCME (continued)

Card shrouds are required for inserting or removing cards in line drawers. Two sizes are available for use with 3-inch and 6-inch cards. Descriptions of these shrouds follow.

Line card insertion / withdrawal tool for	Apparatus code	Common product code
3-inch cards	QTH56A	A0298291
6-inch cards	QTH58A	A0313317

Card removal tools are required for removing cards from line drawers. Two sizes are available. Descriptions of these tools follow.

Card removal tool for	Apparatus code	Common product code
3-4 inch cards	QTH57A	A0298292
Note: For 4-inch or larger cards, use the large grip tool ITA9953.		

Prepare to remove the faulty card by opening the line drawer and following these substeps:

a Face the drawer shelf and grasp the handle at the bottom of the drawer with your right hand.

b Push up on the drawer latch with your thumb and pull the drawer out until fully withdrawn. It is fully withdrawn when the drawer stop, at the top, prevents further travel.

c Maintain a slight pull on the handle and lift the faceplate of the drawer approximately 2.5 cm (1 in).

d While holding the drawer in this position, push the bottom of the drawer, nearest the shelf with your left hand, to a position about 1 cm (.5 in) to the right.

e Hold the drawer in this position with your left hand and lower the faceplate of the drawer by releasing the grip of your right hand.

f Ensure a card shroud and line card extractor are available.

7 Remove the line card to be replaced by following these substeps:

a Slide a card shroud over the card to be removed and an adjacent card. If there is not an adjacent card on either side, do not use the card shroud.

b Grasp the edge of the card with a line card extractor at a point midway between the top and bottom edges. Hold the extractor in your right hand.

c Squeeze the handles of the extractor together to grasp the card tightly.

d Hold the front cover of the line drawer to steady it using your left hand.

e Pull the extractor away from the drawer until the card becomes unplugged from its socket on the drawer backplane.

f Continue pulling the card with the extractor until the card is clear of the shroud.

g Insert the card removed into the ESD container and store using local procedures.

8 Replace the faulty card using the following substeps:

a Remove the replacement card from the ESD container.

If the line card suffix is	Do
AA, AB, or AC	step c
AD	step.b

b Make DIP switch changes to the new replacement NT6X21AD line card to match the DIP switch settings of the card being replaced, or as defined in the following table.

c Slide the card in the shroud guide slots toward the drawer backplane.

d Hold the front cover of the line drawer with your left hand to steady it.

e Grasp the top and bottom edges of the card with the fingers of your right hand.

f Push the card toward the backplane until it plugs fully into the backplane socket.

Recommended NT6X21AD S1 DIP switch settings (Sheet 1 of 2)

	D/A voice S1		**Balance S2**		**Signaling level S3 and S4**			
	switch position		**switch position**		**Both**	**Only**	**Only**	**Both**
	ON	**OFF**	**ON**	**OFF**	**ON**	**S4 ON**	**S3 ON**	**OFF**
Recommended application	**0dB**	**-3.5dB**	**NL**	**9+2**	**1.3Vpp**	**0.8Vpp**	**0.6Vpp**	**0.14Vpp**
P-phone sets long loop: 19-24dB EML	X		X		X			
P-phone sets medium loop: 17-19dB EML	X		X			X		

Note: dB=decibel, NL = non-loaded, Vpp=voltage peak to peak, EML= estimatedmeasured loss, as defined in NTP 297-2011-180 BCS35 version 01.02

NT6X21
in an RSC-S (PCM-30) Model B LCME (continued)

Recommended NT6X21AD S1 DIP switch settings (Sheet 2 of 2)

	D/A voice S1		Balance S2		Signaling level S3 and S4			
	switch position		switch position		Both	Only	Only	Both
	ON	OFF	ON	OFF	ON	S4 ON	S3 ON	OFF
Recommended application	**0dB**	**-3.5dB**	**NL**	**9+2**	**1.3Vpp**	**0.8Vpp**	**0.6Vpp**	**0.14Vpp**
P-phone sets medium loop: 4-17dB EML		X		X			X	
P-phone sets short loops: 0-4dB EML		X		X				X
Northern Telecom UDLCs		X	X					X
Other vendors UDLCs	X			X			X	
6X21AC equivalent mode		X	X		X			

Note: dB=decibel, NL = non-loaded, Vpp=voltage peak to peak, EML= estimatedmeasured loss, as defined in NTP 297-2011-180 BCS35 version 01.02

9 Use the following information to determine where to proceed.

If you entered this procedure from	Do
alarm clearing procedures	step 14
other	step 10

At the MAP terminal

10 Test the NT6X21 line card by typing

```
>DIAG
```

and pressing the Enter key.

If DIAG	Do
passed	step 11
failed	step 15

NT6X21
in an RSC-S (PCM-30) Model B LCME (end)

11 Return the NT6X21 card to service by typing

>RTS

and pressing the Enter key.

If RTS	Do
passed	step 12
failed	step 15

12 Send any faulty cards for repair according to local procedure.

13 Record the date the card was replaced, the serial number of the card, and the symptoms that prompted replacement of the card. Go to step16.

14 Return to the procedure that directed you to this procedure. If necessary, go to the point where a faulty card list was produced, identify the next faulty card on the list, and go to the appropriate card replacement procedure for that card in this manual.

15 Obtain further assistance in replacing this card by contacting operating company maintenance personnel.

16 You have successfully completed this procedure. Return to the maintenance procedure that directed you to this card replacement procedure and continue as directed.

NT6X21 in a STAR or RLD

Application

Use this procedure to replace the following card in a STAR or remote line drawer (RLD).

PEC	Suffixes	Name
NT6X21	AA, AB, AC, AD, BC, CA	Line card type C, Meridian Digital Centrex (MDC), electronic business set

Common procedures

The common replacing a line card procedure is referenced in this procedure.

Action

The following flowchart is a summary of the procedure. To replace the card, use the instructions in the procedure that follows the flowchart.

NT6X21
in a STAR or RLD (continued)

Summary of replacing an NT6X21 card in a STAR or RLD

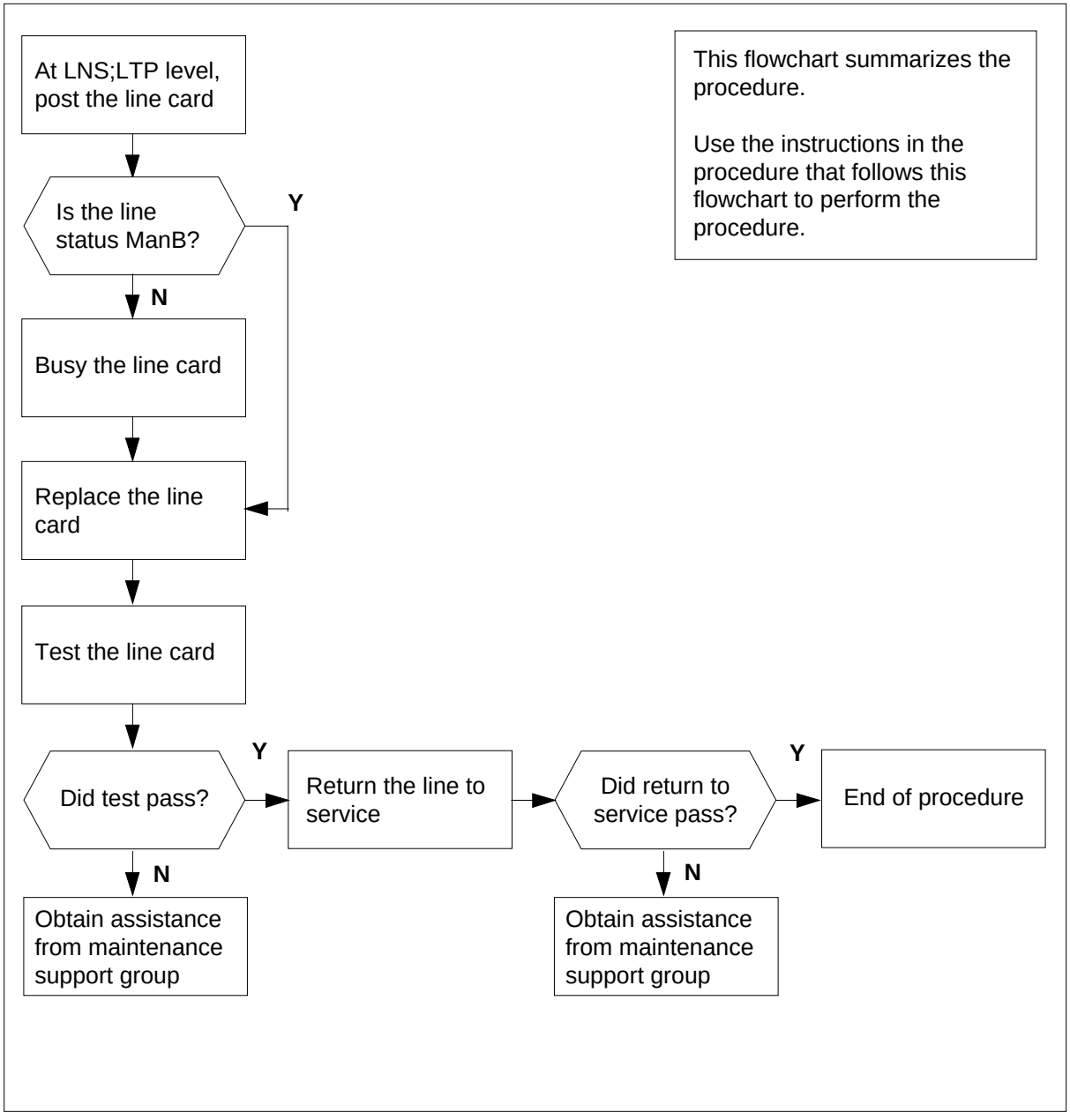

NT6X21 in a STAR or RLD (continued)

Replacing an NT6X21 card in a STAR or RLD

At your current location

1 Get a replacement card. Make sure the replacement card has the same product equipment code (PEC), including suffix, as the card that is to be removed.

2 Make DIP switch changes for the line card.

If the line card code is	Do
AA, AB, AC	step 4
AD	step 3

3 Make DIP switch settings as described in the “Recommended NT6X21AD DIP switch settings" table located in the “Star Remote System hardware" chapter in this manual.

At the MAP terminal

4 To access the LTP level of the MAP terminal and post the line associated with the card to be replaced, type

```
>MAPCI;MTC;LNS;LTP;POST L site frame unit lsg ckt
```

and press the Enter key.

where

site
is the name of the site where the STAR is located

frame
is the frame number of the STAR with the faulty card

unit
is 0 for the STAR

lsg
is the number of the line subgroup with the faulty card (0-35)

ckt
is the number of the circuit associated with the faulty card (0-31)

Example of a MAP response:

```
LCC PTY RNG .....LEN.......... DN   STA F S LTA TE RESULT
IBN      REM1 00 0 03 03     7213355 MB
```

5 Check the status of the posted line.

If the line status is	Do
manual busy (ManB)	step 7
not ManB	step 6

6 To busy the line, type

>BSY

and press the Enter key.

At the STAR site

7 Go to the common replacing a line card procedure in this document. When you have completed the procedure, return to this point.

At the MAP terminal

8 To test the line card just replaced, type

>DIAG

and press the Enter key.

If the DIAG	Do
passes	step 9
fails	step 12

9 To return the line card to service, type

>RTS

and press the Enter key.

If RTS	Do
passes	step 10
fails	step 12

10 Send any faulty cards for repair according to local procedure.

11 Record the following items in office records:

- date the card was replaced
- serial number of the card
- indications that prompted replacement of the card

Go to step 13.

12 Get additional help in replacing this card by contacting the personnel responsible for a higher level of support.

13 You have correctly completed this procedure.

NT6X27 in an IOPAC HIE

Application

Use this procedure to replace the following card in an HIE shelf.

PEC	Suffixes	Name
NT6X27	BB	PCM-30 Interface

Common procedures

The common replacing a card procedure is referenced in this procedure.

Action

The following flowchart is a summary of the procedure. To replace the card, use the instructions in the procedure that follows the flowchart.

NT6X27 in an IOPAC HIE (continued)

Summary of card replacement procedure for an NT6X27 card in an HIE

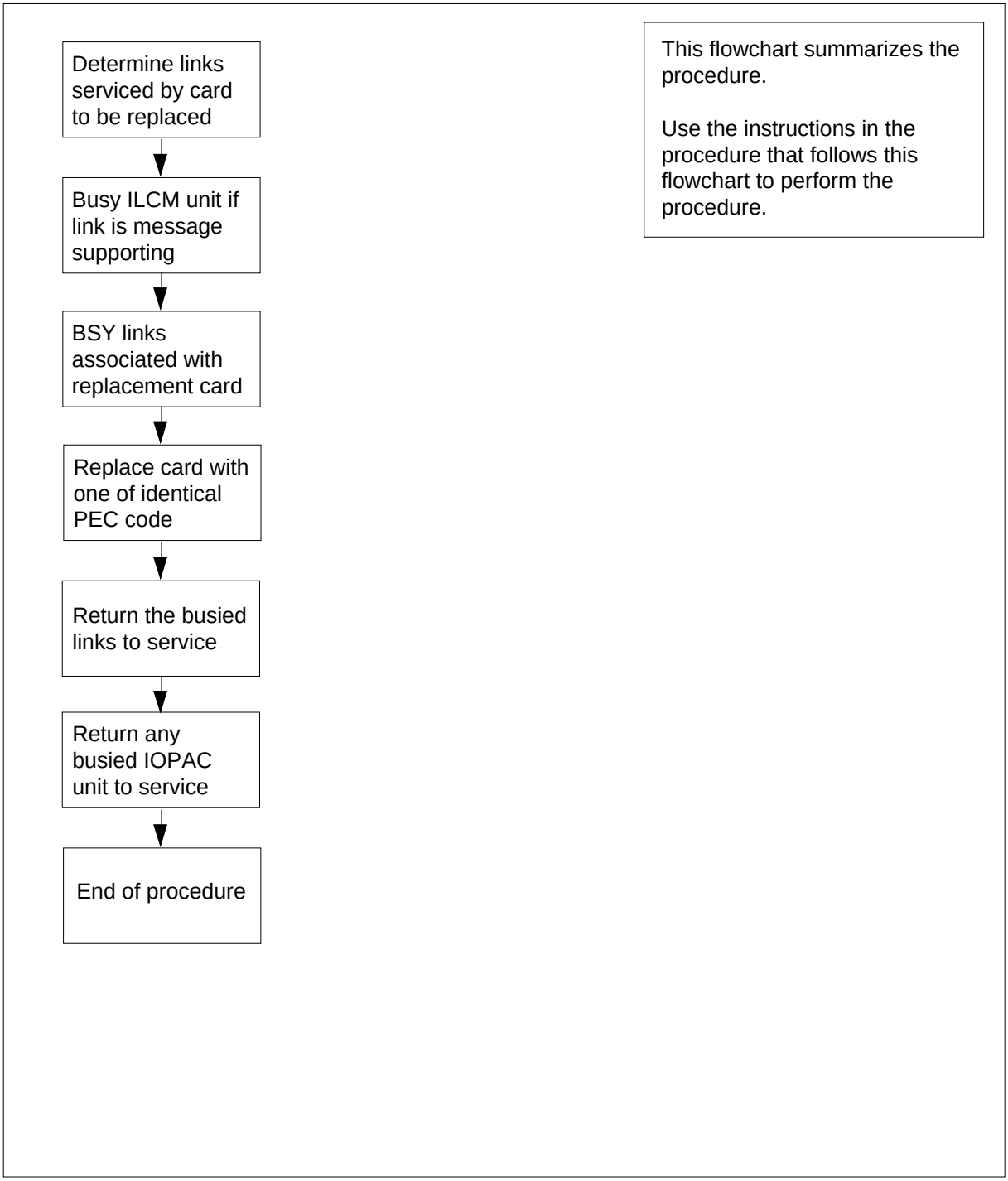

NT6X27
in an IOPAC HIE (continued)

Replacing an NT6X27 card in an HIE

At your current location:

1 Obtain a replacement card. Ensure that the replacement card has the same product equipment code (PEC), including suffix, as the card that is to be removed.

2 If you were directed to this procedure from another maintenance procedure, go to step 4; otherwise, continue with step 3.

At the MAP display

3 Access the PM level and post the ILCM by typing

`>MAPCI;MTC;PM;POST ILCM site frame lcm_no`

and pressing the Enter key.

where

site
is the name of the IOPAC site (alphanumeric)

frame
is the frame number of the IOPAC cabinet

lcm_no
is the number of the IOPAC ILCM

4 Display C-side link information by typing

`> TRNSL C`

and pressing the Enter key.

Example of a MAP response:

```
Link 0: PLGC 0       2; Cap MS; Status: OK    ;MsgCond: OPN
Link 1: PLGC 0       6; Cap MS; Status: SysB  ;MsgCond: CLS
```

5 From the display in step 4, determine the C-side peripheral module (PLGC, or RCO2) to which the IOPAC is connected and post it by typing

`> POST host_pm host_pm_no`

and pressing the Enter key.

where

host_pm
is the name of the host PM (PLGC, or RCO2)

host_pm_no
is the number of the host PM

6 Display P-side link information by typing

`> TRNSL P`

and pressing the Enter key.

NT6X27
in an IOPAC HIE (continued)

Example of a MAP response:

NT6X27 port numbers

```
Link 2: ILCM REM1 00 0  0;Cap MS;Status:OK   ;MsgCond: OPN
Link 6: ILCM REM1 00 0  1;Cap MS;Status:SysB ;MsgCond: CLS
```

7 Record the numbers of the links with status not OK.

Use the following diagram to determine which PCM-30 interface card or cards corresponds to the links identified as faulty in step 6. Note that each NT6X27 card has 2 ports. For example, the faulty link 6 displayed in step 6 is connected to port 1 as indicated, which corresponds to the NT6X27 in slot 20.

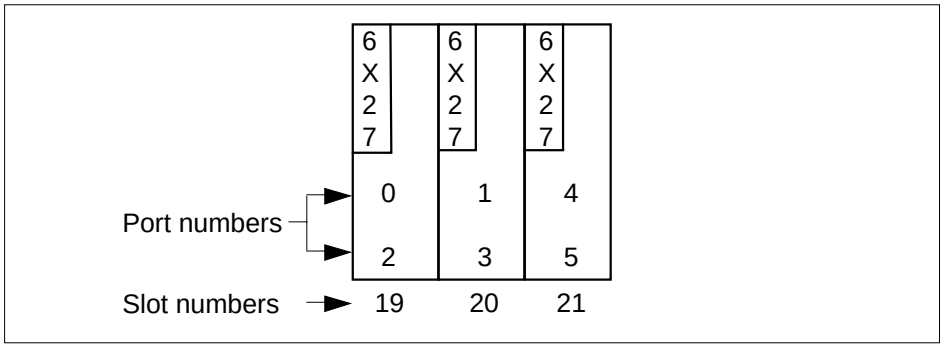

8 Determine the slot location of the faulty card.

If faulty card is in slot	Do
19 or 20 of the HIE	step 9
21 of the HIE	step 12

9 Post the ILCM by typing

`>POST ILCM site frame lcm_no`

and pressing the Enter key.

where

site
is the name of the IOPAC site (alphanumeric)

frame
is the frame number of the IOPAC cabinet

lcm_no
is the number of the ILCM

10 Busy ILCM unit by typing

`>BSY UNIT lcm_unit`

and pressing the Enter key.

NT6X27
in an IOPAC HIE (continued)

where

lcm_unit
is the ILCM unit to be busied (0 or 1)

Note: For ILCM unit 0, card is in slot 19. For ILCM unit 1, card is in slot 20.

11 Post the C-side peripheral module, previously posted in step 5, where the IOPAC is interfaced by typing

```
>POST host_pm host_pm_no
```

and pressing the Enter key.

where

host_pm
is the name of the host PM, (PLGC, RCO2)

host_pm_no
is the number of the host PM

12 Using the information collected in step 7, busy both links associated with the faulty card by typing

```
>BSY LINK link_no
```

and pressing the Enter key.

where

link_no
is one of two links associated with the faulty card

Note: Repeat this step for the other link associated with the faulty card.

At the IOPAC cabinet

13

DANGER
Calls in progress may be interrupted.
The craftsperson must wait at least 15 minutes to allow calls in progress to be completed before removing the NT6X27 PCM-30 interface card.

Change dip switch settings on the new replacement card to match the faulty card being removed.

14 Replace the NT6X27 card using the common replacing a card procedure in this document. When the card has been replaced, return to this step.

NT6X27
in an IOPAC HIE (continued)

At the MAP display

15 Test the links busied in step 12 by typing

`>TST LINK link_no`

and pressing the Enter key.

where

link_no
is one of two links associated with the replacement card

Note: Repeat this step for the other link associated with the replacement card.

If test	Do
failed	step 24
passed	step16

16 Return to service the links busied in step 12 by typing

`>RTS LINK link_no`

and pressing the Enter key.

where

link_no
is one of two links associated with the replacement card

Note: Repeat this entry for the other link associated with the replacement card.

If RTS	Do
failed	step 24
passed	step17

17 Determine if there are remaining links to clear.

If there are	Do
remaining links to clear	step 12
no remaining links to clear	step18

18 If you were directed to this procedure from another maintenance procedure, return now to the procedure that directed you here and continue as directed; otherwise, continue with step 19.

19 Determine if an ILCM unit is manual busy.

If ILCM unit	Do
is ManB	step 20

NT6X27 in an IOPAC HIE (end)

If ILCM unit	Do
is not ManB	step 24

20 Post the ILCM by typing

`>POST ILCM site frame lcm_no`

and pressing the Enter key.

where

site
is the site name of the IOPAC (alphanumeric)

frame
is the frame number of the IOPAC cabinet

lcm_no
is the number of the ILCM

21 Return the busied unit to service by typing

`>RTS UNIT lcm_unit`

and pressing the Enter key.

where

lcm_unit
is the ILCM unit busied in step 10

If RTS	Do
failed	step 24
passed	step 22

22 Send any faulty cards for repair according to local procedure.

23 Record the following items in office records:

- date the card was replaced
- serial number of the card
- symptoms that prompted replacement of the card

Proceed to step 25.

24 Obtain further assistance in replacing this card by contacting the personnel responsible for higher level of support.

25 You have successfully completed this procedure. Return to the maintenance procedure that directed you to this card replacement procedure and continue as directed.

NT6X27 in an OPM HIE

Application

Use this procedure to replace the following card in an HIE shelf.

PEC	Suffixes	Name
NT6X27	BB	PCM-30 Interface

Common procedures

The common replacing a card procedure is referenced in this procedure.

Action

The following flowchart is a summary of the procedure. To replace the card, use the instructions in the procedure that follows the flowchart.

NT6X27
in an OPM HIE (continued)

Summary of card replacement procedure for an NT6X27 card in an in HIE

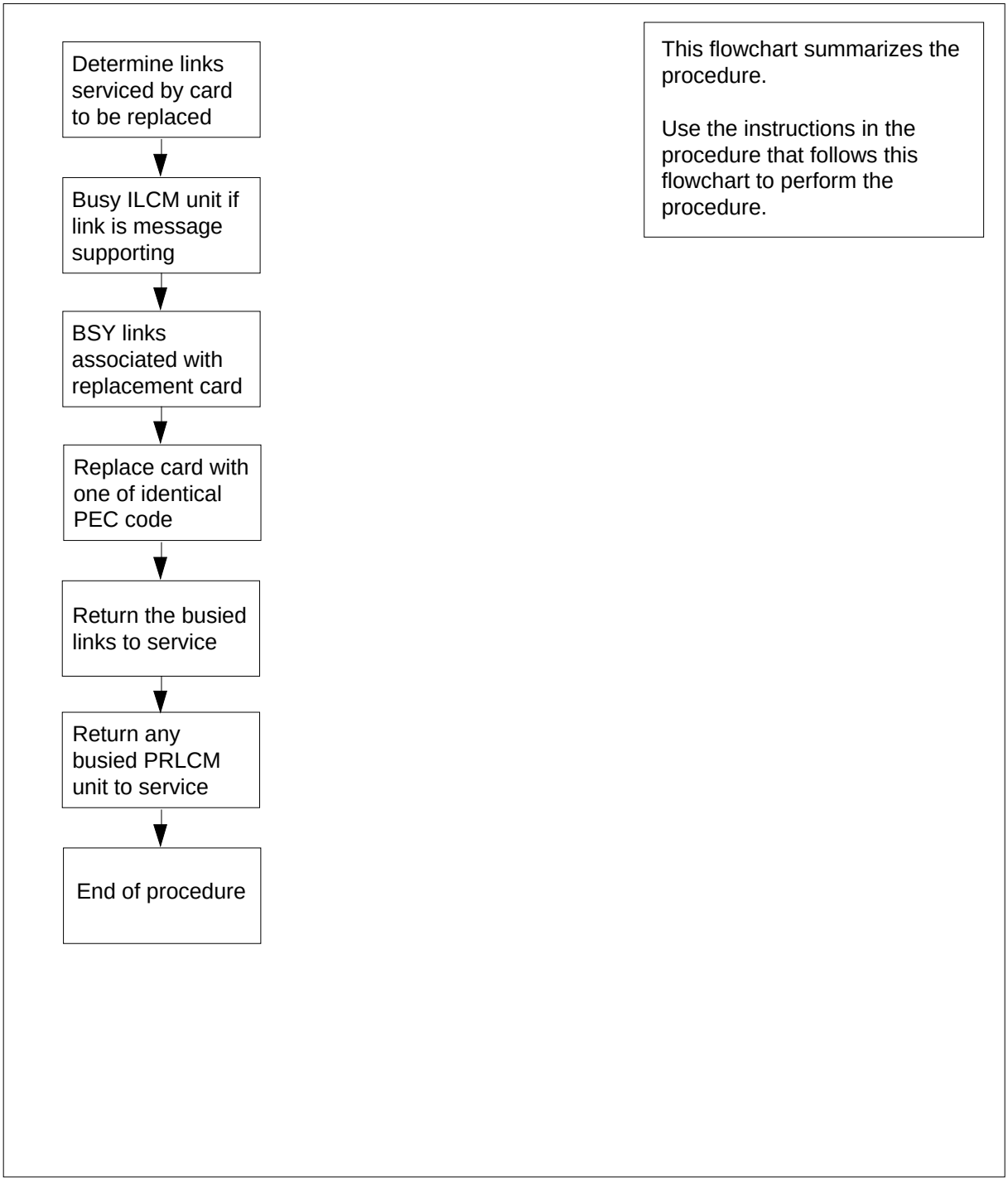

NT6X27
in an OPM HIE (continued)

Replacing an NT6X27 card in an HIE

At your current location:

1 Obtain a replacement card. Ensure that the replacement card has the same product equipment code (PEC), including suffix, as the card that is to be removed.

2 If you were directed to this procedure from another maintenance procedure, go to step 4; otherwise, continue with step 3.

At the MAP display

3 Access the PM level and post the ILCM by typing

`>MAPCI;MTC;PM;POST ILCM site frame lcm_no`

and pressing the Enter key.

where

site
is the name of the PRLCM site (alphanumeric)

frame
is the frame number of the PRLCM cabinet

lcm_no
is the number of the PRLCM ILCM

4 Display C-side link information by typing

`> TRNSL C`

and pressing the Enter key.

Example of a MAP response:

```
Link 0: PLGC 0       2; Cap MS; Status: OK    ;MsgCond: OPN
Link 1: PLGC 0       6; Cap MS; Status: SysB  ;MsgCond: CLS
```

5 From the display in step 4, determine the C-side peripheral module (PLGC, or RCO2) to which the PRLCM is connected and post it by typing

`> POST host_pm host_pm_no`

and pressing the Enter key.

where

host_pm
is the name of the host PM (PLGC, or RCO2)

host_pm_no
is the number of the host PM

NT6X27
in an OPM HIE (continued)

6 Display P-side link information by typing

`> TRNSL P`

and pressing the Enter key.

Example of a MAP response:

NT6X27 port numbers

```
Link 2: ILCM REM1 00 0  0;Cap MS;Status:OK   ;MsgCond: OPN
Link 6: ILCM REM1 00 0  1;Cap MS;Status:SysB ;MsgCond: CLS
```

7 Record the numbers of the links with status not OK.

Use the following diagram to determine which PCM-30 interface card or cards corresponds to the links identified as faulty in step 6. Note that each NT6X27 card has 2 ports. For example, the faulty link 6 displayed in step 6 is connected to port 1 as indicated, which corresponds to the NT6X27 in slot 20.

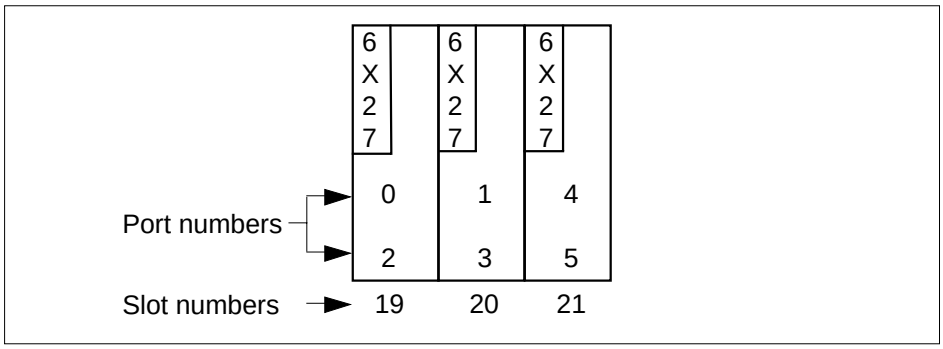

8 Determine the slot location of the faulty card.

If faulty card is in slot	Do
19 or 20 of the HIE	step 9
21 of the HIE	step 12

9 Post the ILCM by typing

`>POST ILCM site frame lcm_no`

and pressing the Enter key.

where

site
is the name of the PRLCM site (alphanumeric)

frame
is the frame number of the PRLCM cabinet

lcm_no
is the number of the ILCM

NT6X27
in an OPM HIE (continued)

10 Busy ILCM unit by typing

`>BSY UNIT lcm_unit`

and pressing the Enter key.

where

lcm_unit
is the ILCM unit to be busied (0 or 1)

Note: For ILCM unit 0, card is in slot 19. For ILCM unit 1, card is in slot 20.

11 Post the C-side peripheral module, previously posted in step 5, where the PRLCM is interfaced by typing

`>POST host_pm host_pm_no`

and pressing the Enter key.

where

host_pm
is the name of the host PM, (PLGC, RCO2)

host_pm_no
is the number of the host PM

12 Using the information collected in step 7, busy both links associated with the faulty card by typing

`>BSY LINK link_no`

and pressing the Enter key.

where

link_no
is one of two links associated with the faulty card

Note: Repeat this step for the other link associated with the faulty card.

At the PRLCM cabinet

13

DANGER
Calls in progress may be interrupted.
The craftsperson must wait at least 15 minutes to allow calls in progress to be completed before removing the NT6X27 PCM-30 interface card.

Change dip switch settings on the new replacement card to match the faulty card being removed.

14 Replace the NT6X27 card using the common replacing a card procedure in this document. When the card has been replaced, return to this step.

NT6X27
in an OPM HIE (continued)

At the MAP display

15 Test the links busied in step 12 by typing

`>TST LINK link_no`

and pressing the Enter key.

where

link_no
is one of two links associated with the replacement card

Note: Repeat this step for the other link associated with the replacement card.

If test	Do
failed	step 23
passed	step 16

16 Return to service the links busied in step 12 by typing

`>RTS LINK link_no`

and pressing the Enter key.

where

link_no
is one of two links associated with the replacement card

Note: Repeat this entry for the other link associated with the replacement card.

If RTS	Do
failed	step 23
passed	step 17

17 Determine if there are remaining links to clear.

If there are	Do
remaining links to clear	step 12
no remaining links to clear	step 18

18 If you were directed to this procedure from another maintenance procedure, return now to the procedure that directed you here and continue as directed.

19 Post the ILCM by typing

`>POST ILCM site frame lcm_no`

and pressing the Enter key.

where

site
is the site name of the PRLCM (alphanumeric)

frame
is the frame number of the PRLCM cabinet

lcm_no
is the number of the ILCM

20 Return the busied unit to service by typing

```
>RTS UNIT lcm_unit
```

and pressing the Enter key.

where

lcm_unit
is the ILCM unit busied in step 10

If RTS	Do
failed	step 23
passed	step 21

21 Send any faulty cards for repair according to local procedure.

22 Record the following items in office records:

- date the card was replaced
- serial number of the card
- symptoms that prompted replacement of the card

Proceed to step 24.

23 Obtain further assistance in replacing this card by contacting the personnel responsible for higher level of support.

24 You have successfully completed this procedure. Return to the maintenance procedure that directed you to this card replacement procedure and continue as directed.

NT6X27 in an RLCM HIE

Application

This procedure replaces the following card in a host interface equipment (HIE) shelf:

PEC	Suffixes	Name
NT6X27	BB	PCM-30 Interface

Common procedures

The common replacing a card procedure is referred to in this procedure.

Action

This procedure contains a summary flowchart and a list of steps. Use the flowchart to review the procedure. Follow the steps to perform the procedure.

NT6X27
in an RLCM HIE (continued)

Summary of card replacement procedure for an NT6X27 card in an in HIE

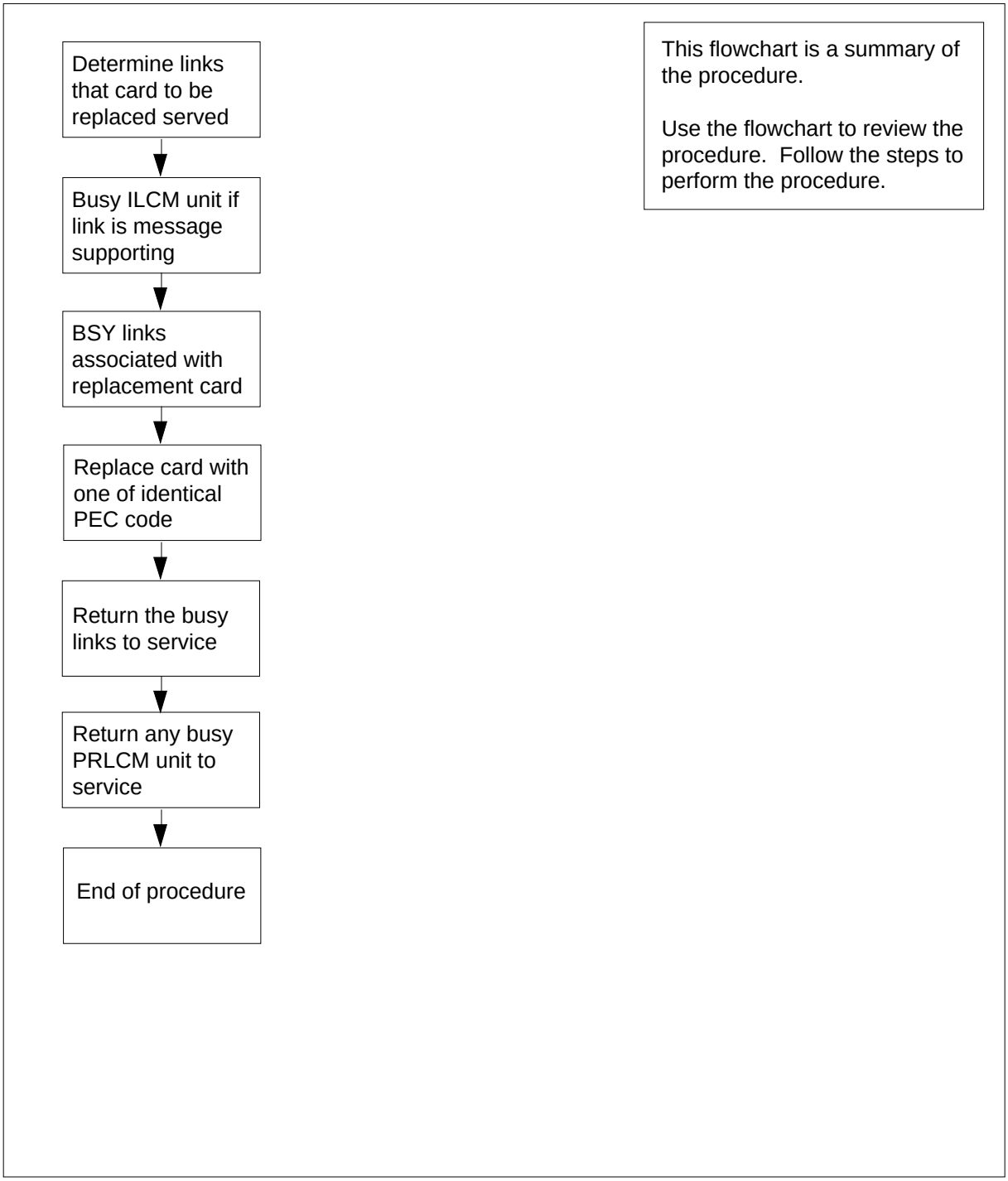

NT6X27
in an RLCM HIE (continued)

Replacing an NT6X27 card in an HIE

At your current location:

1 Obtain a replacement card. Make sure the replacement card has the same product equipment code (PEC) and PEC suffix, as the card to be removed.

2 If another maintenance procedure directs you to this procedure, go to step 4. If another procedure does not direct you to this procedure, go to step 3.

At the MAP display

3 To access the peripheral module (PM) level and post the international line concentrating module (ILCM), type:

```
>MAPCI;MTC;PM;POST ILCM site frame lcm_no
```

and press the Enter key.

where

site
is the name of the PRLCM site (alphanumeric)

frame
is the frame number of the PRLCM cabinet

lcm_no
is the number of the PRLCM ILCM

4 To display C-side link information, type:

```
> TRNSL C
```

and press the Enter key.

Example of a MAP response:

PLGC P-side link numbers

```
Link 0: PLGC 0       2; Cap MS; Status: OK    ;MsgCond: OPN
Link 1: PLGC 0       6; Cap MS; Status: SysB  ;MsgCond: CLS
```

5 Use the display in step 4 to determine the central side (C-side) PM (PLGC, or RCO2) that connects to the PRLCM. To post this module, type:

```
> POST host_pm host_pm_no
```

and press the Enter key.

where

host_pm
is the name of the host PM (PLGC, or RCO2)

host_pm_no
is the number of the host PM

NT6X27
in an RLCM HIE (continued)

6 To display the peripheral side (P-side) link information, type:

`> TRNSL P`

and press the Enter key.

Example of a MAP response:

NT6X27 port numbers

```
Link 2: ILCM REM1 00 0  0;Cap MS;Status:OK   ;MsgCond: OPN
Link 6: ILCM REM1 00 0  1;Cap MS;Status:SysB ;MsgCond: CLS
```

7 Record the numbers of the links with status not correct.

Use the following diagram to determine the PCM-30 interface card(s) that correspond to the links that step 6 identifies as defective.

Note: Each NT6X27 card has two ports. For example, the defective link 6 appears in step 6. This link connects to port 1 as indicated, Port 1 corresponds to the NT6X27 in slot 20.

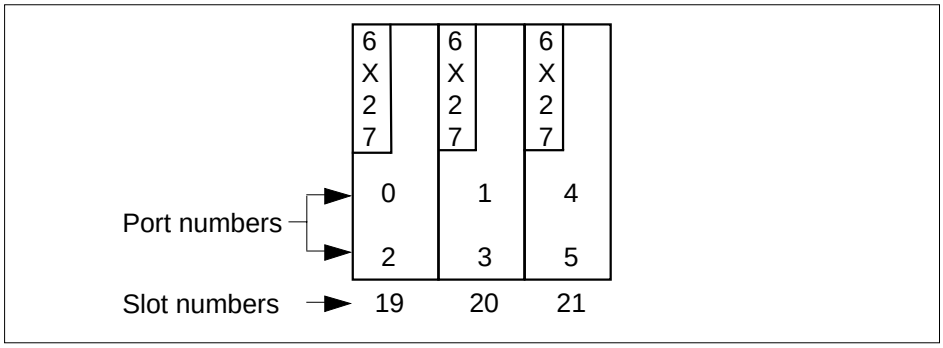

8 Determine the slot location of the defective card.

If defective card	Do
is in slot 19 or 20 of the HIE	step 9
is in slot 21 of the HIE	step 12

9 To post the ILCM, type:

`>POST ILCM site frame lcm_no`

and press the Enter key.

where

site
is the name of the PRLCM site (alphanumeric)

frame
is the frame number of the PRLCM cabinet

NT6X27
in an RLCM HIE (continued)

lcm_no
is the number of the ILCM

10 To busy the ILCM unit, type:

>BSY UNIT lcm_unit

and press the Enter key.

where

lcm_unit
is the ILCM unit to be busied zero or one

Note: For ILCM unit 0, card is in slot 19. For ILCM unit 1, card is in slot 20.

11 To post the C-side PM, posted before in step 5, where the PRLCM is interfaced, type:

>POST host_pm host_pm_no

and press the Enter key.

where

host_pm
is the name of the host PM (PLGC or RCO2)

host_pm_no
is the number of the host PM

12 Use the information collected in step 7. To busy both links for the defective card, type :

>BSY LINK link_no

and press the Enter key.

where

link_no
is one of two links associated with the defective card.

Note: Repeat this step for the other link associated with the defective card.

At the PRLCM cabinet

13

DANGER
Calls in progress can be interrupted.
Wait at least 15 min to allow calls in progress to complete before you remove the NT6X27 PCM-30 interface card.

Change DIP switch settings on the new replacement card to match the defecitve card to be removed.

NT6X27
in an RLCM HIE (continued)

14 Use the common replacing a card procedure in this document. When you replace the card, return to this step.

At the MAP display

15 To test the busy links in step 12, type:

`>TST LINK link_no`

and press the Enter key.

where

link_no
is one of two links associated with the replacement card

Note: Repeat this step for the other link associated with the replacement card.

If test	Do
fails	step 23
passes	step 16

16 To Return to service (RTS) the links busied in step 12, type:

`>RTS LINK link_no`

and press the Enter key.

where

link_no
is one of two links for the replacement card

Note: Repeat this entry for the other link associated with the replacement card.

If RTS	Do
fails	step 23
passes	step 17

17 Determine if there are links to clear.

If there	Do
are links to clear	step 12
are no links to clear	step 18

18 Return to the procedure that directed you to this procedure. Continue as directed.

19 To post the ILCM, type:

`>POST ILCM site frame lcm_no`

NT6X27 in an RLCM HIE (end)

and press the Enter key.

where

site
is the site name of the PRLCM (alphanumeric)

frame
is the frame number of the PRLCM cabinet

lcm_no
is the number of the ILCM

20 To return the busy unit to service, type:

```
>RTS UNIT lcm_unit
```

and press the Enter key.

where

lcm_unit
is the ILCM unit busied in step 10

If RTS	Do
fails	step 23
passes	step 21

21 Send defective cards for repair according to local procedure.

22 Record the following items in office records:

- date of card replacement
- serial number of the card
- problems that prompted replacement of the card.

Proceed to step 24.

23 For additional help, contact the next level of support.

24 This procedure is complete. Return to the maintenance procedure that directed you to this card replacement procedure. Continue as directed.

NT6X30 in an RSC LCM

Application

Use this procedure to replace the following card in an RSC LCM.

PEC	Suffixes	Name
NT6X30	AA, CA	Ringing generator

Common procedures

None

Action

The following flowchart is a summary of the procedure. To replace the card, use the instructions in the procedure that follows the flowchart.

NT6X30
in an RSC LCM (continued)

Summary of card replacement procedure for NT6X30 card in RSC LCM

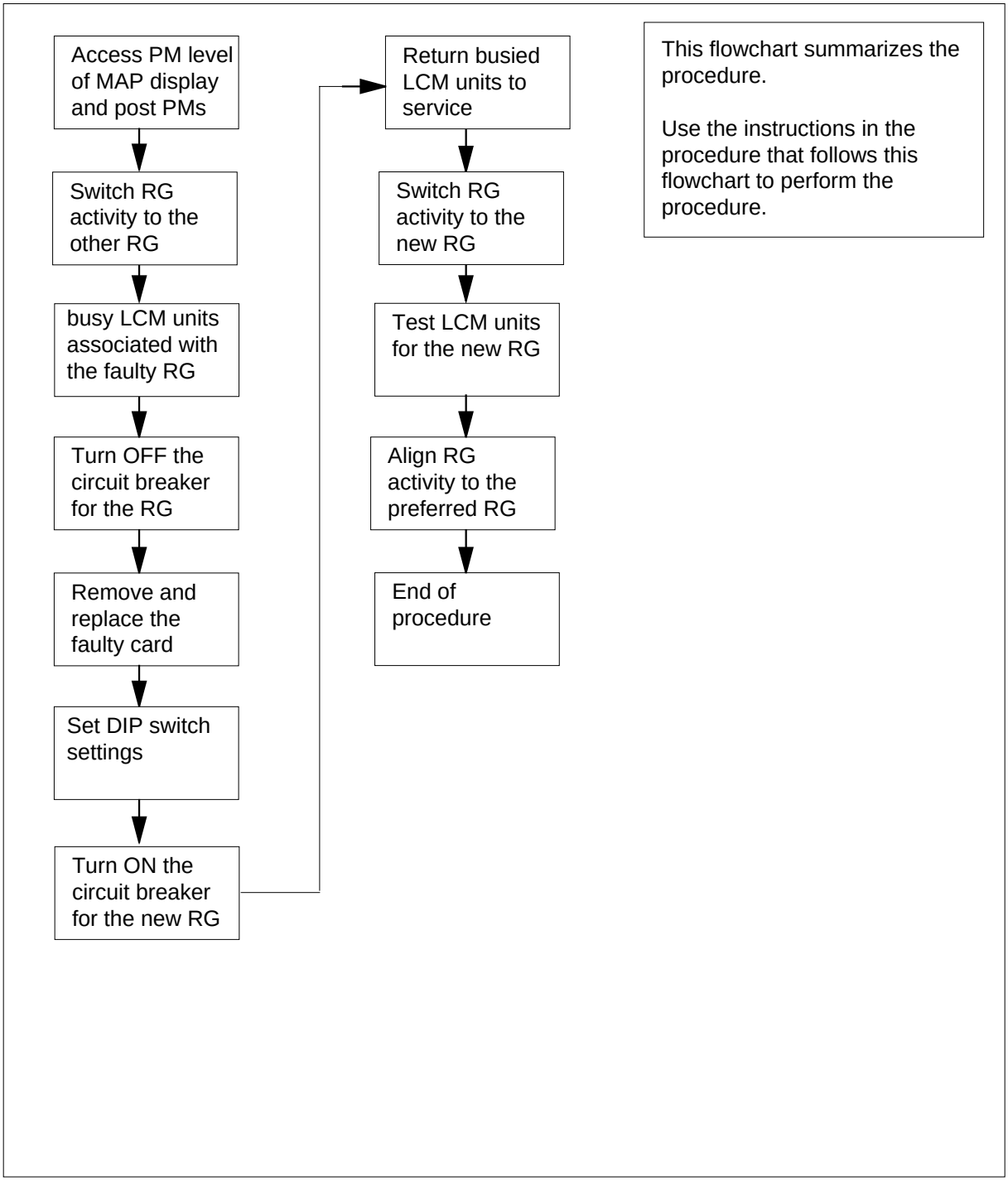

NT6X30
in an RSC LCM (continued)

Replacing an NT6X30 card in RSC LCM

At your Current Location

1

CAUTION
Loss of service
This procedure includes directions to manually busy one or more peripheral module (PM) units. Since manually busying a PM unit can cause service degradation, perform this procedure only if necessary to restore out-of-service components. Otherwise, carry out this procedure during periods of low traffic.

Proceed only if you have been directed to this card replacement procedure from a step in a maintenance procedure.

2 Obtain an approved replacement card.

At the MAP terminal

3 Access the PM level and post the LCM by typing

`>MAPCI;MTC;PM;POST LCM site frame_no lcm_no`

and pressing the Enter key.

where

site
is the name of the site at which the LCM is located

frame_no
is the number of the frame (00 to 511)

lcm_no
is the number of the LCM (0 or 1) in the frame

Example of a MAP response:

```
LCM REM1 00 0 ISTb Links  OOS: Cside 0 Pside 0
Unit 0: ISTb       /RG:0
Unit 1: InSv      /RG:0
                            1111  11  11  11  RG: Pref 0 ISTb
Drwr:  01  23  45  67  8901  23  45  67  89      Stby 1 InSv
       ..  ..  ..  ....   ..  ..  ..  ..  ..
```

4 Check the state of the PM units.

If the PM or PM units are	Do
`Offl or SysB`	step 5

NT6X30
in an RSC LCM (continued)

If the PM or PM units are	Do
One unit is `InSv or ISTb` the other unit is `ISTb or SysB`	step 6

5 Check the state of the other PM in the frame.

If the other PM is	Do
`Offl or SysB`	step 37
`InSv or ISTb`	step 6

6 Record the numbers of the PM units serviced by the faulty RG you are replacing.

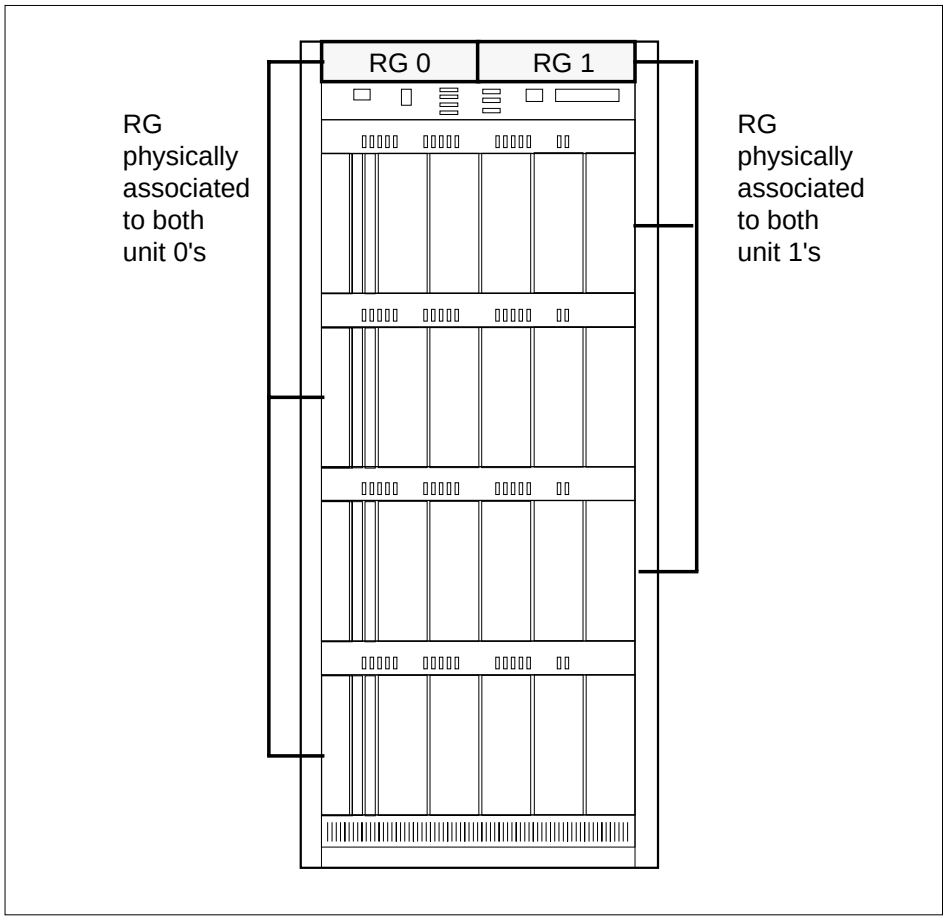

NT6X30
in an RSC LCM (continued)

7 The next action depends on the type of LCM alarm indicated.

If the alarm is	Do
critical	step 9
major or minor	step 8

8 Switch RG activity for the PM unit assigned to the faulty RG by typing

>SWRG UNIT unit_no

and pressing the Enter key.

where

unit_no
is the PM unit number (0 or 1)

Example of a MAP response:

```
LCM REM1 00 0 Unit 0 SWRG Passed
```

Note: Repeat this command for the other PM units assigned to the faulty RG.

If the SWRG	Do
passed	step 9
failed	step 38

9 Manually-busy (ManB) the PM unit associated with the faulty RG by typing

>BSY UNIT unit_no

and pressing the Enter key.

where

unit_no
is the PM unit number (0 or 1) associated with the faulty RG

Note: If clearing a critical alarm choose either unit to work on.

Example of a MAP response:

```
LCM REM1 00 0 Unit 0 Bsy Passed
```

Note: Repeat this command for the other PM in the frame.

If the BSY command	Do
passed	step 11

NT6X30
in an RSC LCM (continued)

If the BSY command	Do
failed	step 38

10 The next action depends on the type of PM alarm indicated.

If the alarm is	Do
critical	step 15
major or minor	step 11

11 The next action depends on how many LCMs are provisioned in the equipment frame.

If there	Do
is one LCM provisioned in the frame	step 15
two LCMs provisioned in the frame, and you have not switched RG activity for both LCMs	step 12
two LCMs provisioned in the frame, and you have switched RG activity for both LCMs	step 13

12 Repeat steps 3 to 11 for the other LCM provisioned in the equipment frame.

13 Post both PMs in the frame and ensure all units are now on the good RG by typing

```
>POST LCM site frame_no lcm_no site frame_no lcm_no
```

and pressing the Enter key.

where

site
is the PM location (alphanumeric) of the first LCM

frame_no
is the frame number (00 to 511) of the first LCM

lcm_no
is the number of the first LCM (0 or 1) in the frame,

site
is the LCM location (alphanumeric) of the second LCM

frame_no
is the frame number (00 to 511) of the second LCM

lcm_no
is the number of the second LCM (0 or 1) in the frame,

Example of command

```
>POST LCM REM1 00 0 REM1 00 1
```

Example of a MAP display:

```
LCM REM1 00 0 ISTb Links  OOS: Cside 0 Pside 0
Unit 0: ISTb       /RG:1
Unit 1: InSv      /RG:1
                          1111  11  11  11  RG: Pref 0 ISTb
Drwr:01  23  45  67  89 01  23  45  67  89      Stby 1 InSv
     ..  ..  ..  .. ..  ..  ..  ..  ..  ..
```

Examine the other PM in the frame by typing

>NEXT

and pressing the Enter key.

Example of a MAP display:

```
LCM REM1 00 1 ISTb Links  OOS: Cside 0 Pside 0
Unit 0: ISTb       /RG:1
Unit 1: InSv      /RG:1
                           1111  11  11  11  RG: Pref 0 ISTb
Drwr:  01  23  45  67  8901  23  45  67  89      Stby 1 InSv
       ..  ..  ..  .. ..  ..  ..  ..  ..  ..
```

If both PMs are	Do
on the good RG	step 15
not on the good RG	step 14

14 Repeat steps 3 to 13 for the other PM provisioned in the equipment frame.

At the RCE frame

15 Locate the RG you are replacing.

Note: RG 0 is located on the left side of the frame at slot 01, RG 1 is located on the right side of the frame at slot 11, shelf position 76.

NT6X30
in an RSC LCM (continued)

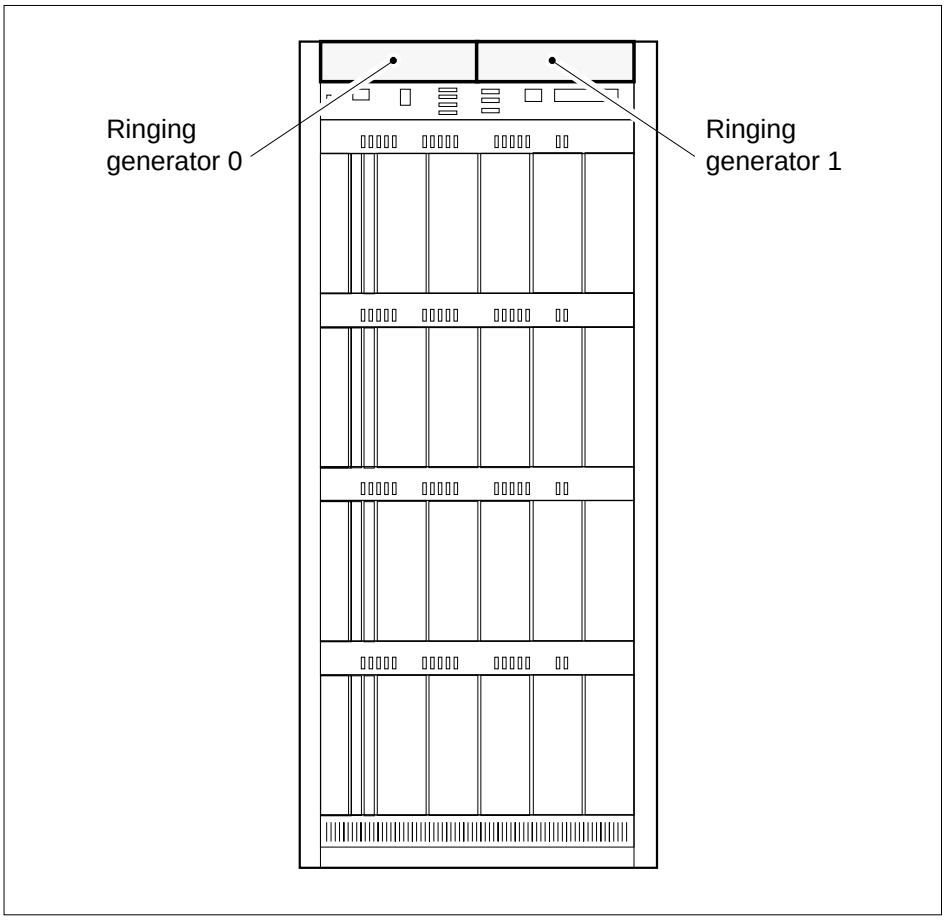

16

DANGER
Static electricity damage
Before removing any cards, put on a wrist strap and connect it to the wrist strap grounding point on the left side of the modular supervisory panel (MSP) of the LCM. This protects the equipment against damage caused by static electricity.

Put on a wrist strap.

17

WARNING
Risk of personal injury
Ensure that you switch off the correct circuit breaker on the FSP as described in the following steps. Do not proceed until you have located and switched OFF the correct circuit breaker for the RG you are replacing.

Switch OFF the circuit breaker on the FSP that powers the faulty RG card you are replacing.

18

DANGER
Do not hold the card by the levers only
Holding a card by the locking levers only may break one or both levers. Once the card has been pulled half way out of the shelf, carefully grasp the card underneath for more secure support and continue to remove the card from the shelf. Avoid touching any wires or internal parts on the card.

Open the locking levers on the face of the card.

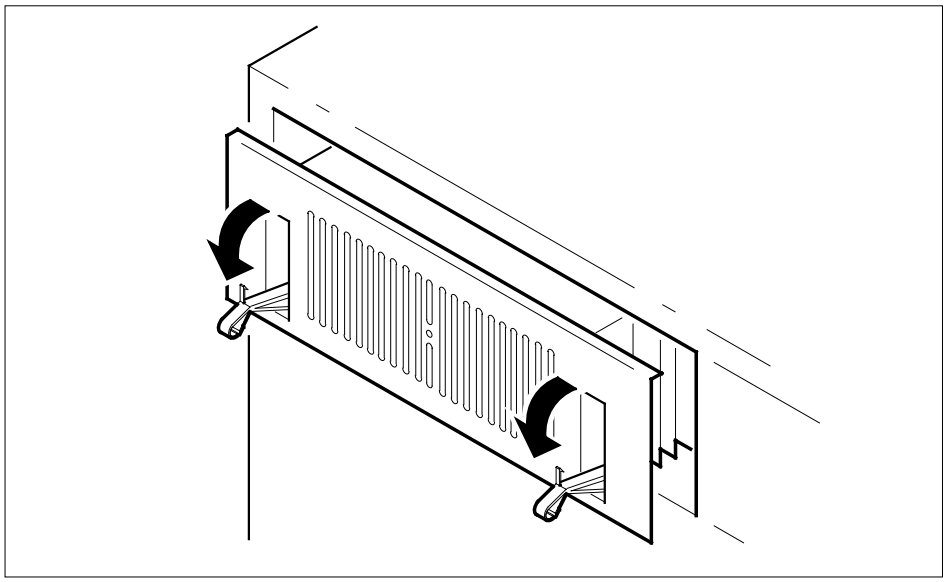

19 While grasping the locking levers, gently pull the card towards you until it protrudes approximately halfway out of the shelf.

NT6X30
in an RSC LCM (continued)

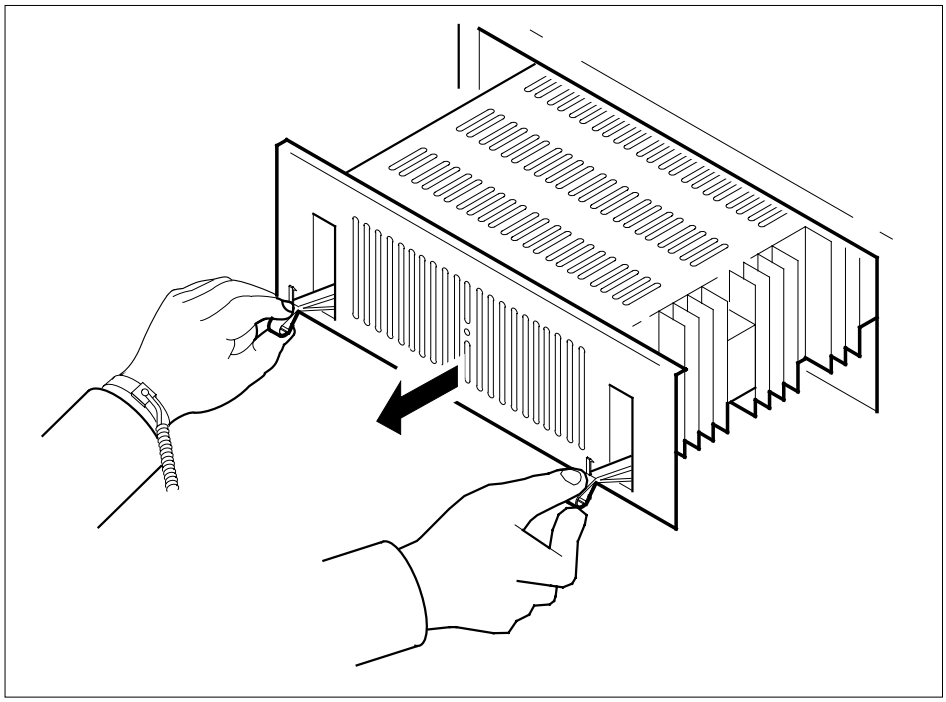

20 While grasping the card by the face plate with one hand and supporting the card from the bottom with the other hand, gently pull the card towards you until it clears the shelf.

21 Place the card you have removed in an electrostatic discharge (ESD) protective container.

22

CAUTION
Loss of service
Incorrect DIP switch setting can result in a service outage. Check the DIP switch layout for the switch numbering and for the ON and OFF position.

DANGER
Potential equipment damage
The newer versions of the ringing generator (versions with suffixes BB, CA, DB, HA, or JA) use switch 8. Ensure that switch 8 is in the ON position on the replacement card.

NT6X30
in an RSC LCM (continued)

Set the DIP switch settings on the replacement card.

Note: If you are replacing an older version of the NT6X30 with a newer version (newer versions have suffixes BB, CA, DB, HA, or JA), switch 8 must be in the ON position on the replacement card. If in doubt, contact your next level of support.

23 Open the locking levers on the replacement card. Align the card with the right slot in the shelf and gently slide the card into the shelf.

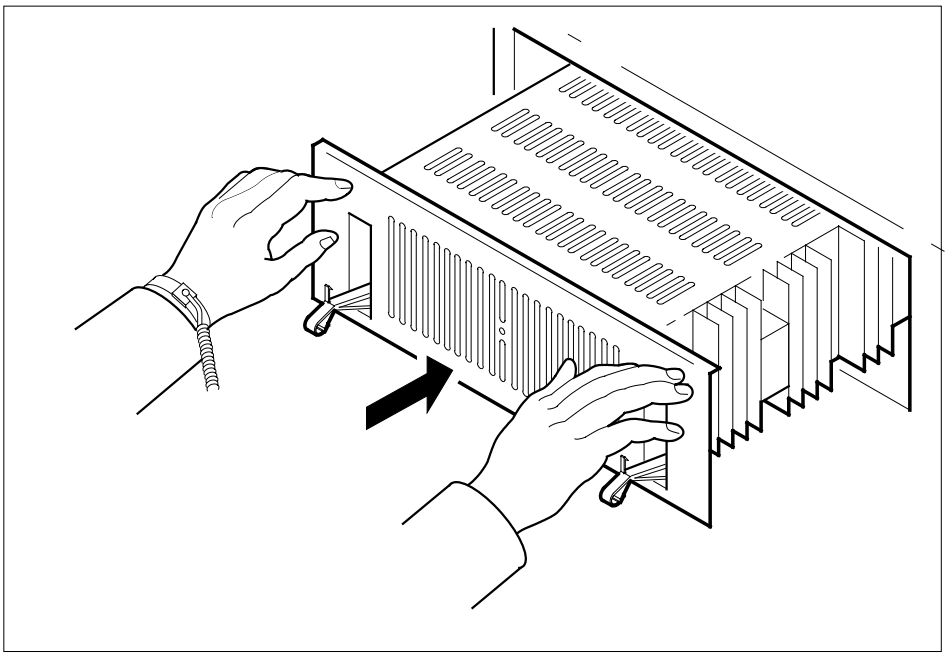

24 Seat and lock the card.

a Using your fingers or thumbs, push on the upper and lower edges of the faceplate to ensure that the card is fully seated in the shelf.

b Close the locking levers to secure the card.

NT6X30
in an RSC LCM (continued)

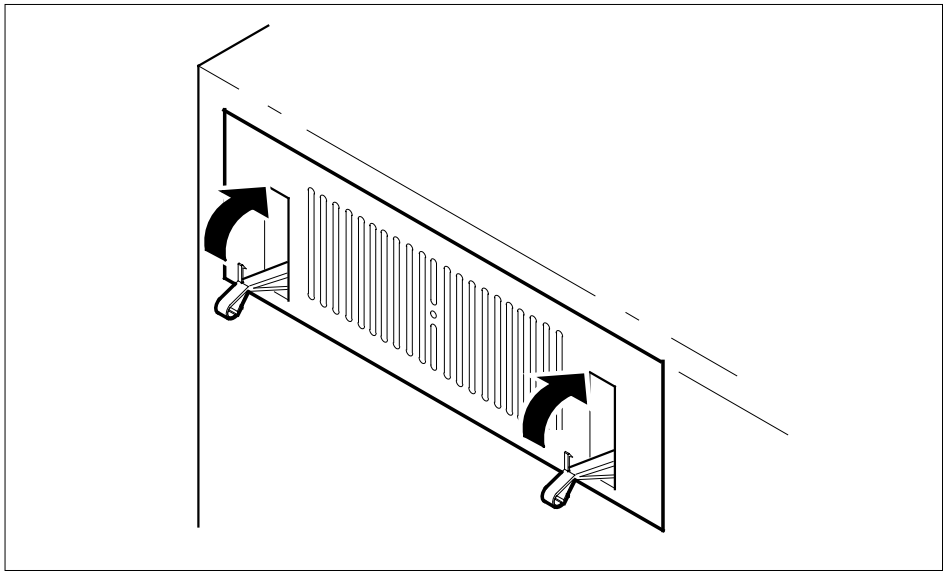

25 Switch the circuit breaker to the ON position that you switched to the OFF position on the FSP at step 17.

If	Do
the circuit breaker remains switched and the LED light on the FSP goes out	step 26
the circuit breaker trips or the LED light on the FSP does not go out	step 38

26 The next action depends on your reason for performing this procedure.

If you were	Do
directed to this procedure from a maintenance procedure	step 27
not directed to this procedure from a maintenance procedure	step 28

27 Return to the maintenance procedure that sent you to this procedure and continue as directed.

NT6X30
in an RSC LCM (continued)

At the MAP terminal

28 Post a LCM in the frame by typing

`>POST LCM site frame_no lcm_no`

and pressing the Enter key.

where

site
is the PM location (alphanumeric)

frame_no
is the frame number (00 to 511)

lcm_no
is the number of the LCM (0 or 1) in the frame

29 Wait until there is no system-initiated maintenance on the unit.

30 Return the ManB unit to service by typing

`>RTS UNIT unit_no`

and pressing the Enter key.

where

unit_no
is the number (0 or 1) of the LCM unit

31 Switch RG activity to the new RG by typing

`>SWRG UNIT unit_no`

and pressing the Enter key.

where

unit_no
is the PM unit number (0 or 1)

Example of a MAP display:

```
LCM REM1 00 0 InSv Links  OOS: Cside 0 Pside 0
Unit 0: InSv       /RG:1
Unit 1: InSv      /RG:1
                            1111  11  11  11  RG: Pref 0  InSv
Drwr:  01  23  45  67  89 01  23  45  67  89      Stby 1 InSv
       ..  ..  ..  .. ..  ..  ..  ..  ..  ..
```

If the SWRG command	Do
passed, and RG activity must be switched for the other unit	step 32
passed, and RG activity is acceptable for both PM units	step 33

NT6X30
in an RSC LCM (continued)

If the SWRG command	Do
failed	step 38

32 Repeat step 31 for the other PM unit.

33 Test the new RG by typing

>TST PM

and pressing the Enter key.

Example of a MAP response:

```
LCM REM1 00 0 Unit 1  InSvce Tests Initiated
LCM REM1 00 0 Unit 0  InSvce Tests Initiated
LCM REM1 00 0 Unit 1  Tst Passed
LCM REM1 00 0 Unit 0  Tst Passed
```

If the TST	Do
passed	step 34
failed	step 38

34 Align RG activity to the preferred RG by typing

>SWRG UNIT unit_no

and pressing the Enter key.

where

unit_no
is the PM unit number (0 or 1)

Example of a MAP display:

```
LCM REM1 00 0 InSv Links  OOS: Cside 0 Pside 0
Unit 0: InSv       /RG:0
Unit 1: InSv      /RG:0
                          1111  11  11  11  RG: Pref 0 InSv
Drwr:  01  23  45  67  8901  23  45  67  89      Stby 1 InSv
       ..  ..  ..  .. ..  ..  ..  ..  ..  ..
```

35 The next action depends on how many LCMs are provisioned in the equipment frame.

If there	Do
one LCM provisioned in the frame	step 39
two LCMs provisioned in the frame, and you have not switched RG activity for both LCMs	step 36

NT6X30 in an RSC LCM (end)

If there	Do
two LCMs provisioned in the frame, and you have switched RG activity for both LCMs	step 39

36 Repeat steps 28 to 35 for the other LCM provisioned in the equipment frame.

37 Consult office personnel to determine why the component is offline. Continue as directed by office personnel.

38 Obtain further assistance in replacing this card by contacting the personnel responsible for higher level of support.

39 You have successfully completed this procedure. Remove the sign from the active unit and return to the maintenance procedure that directed you to this card replacement procedure and continue as directed.

NT6X30 in an RSC-S (DS-1) Model A LCME

Application

Use this procedure to replace an NT6X30 card in an RSC-S LCME.

PEC	Suffixes	Name
NT6X30	HA	Ringing Generator

Common procedures

None

Action

The following flowchart is only a summary of the procedure. To replace the card, use the instructions in the procedure that follows the flowchart.

NT6X30
in an RSC-S (DS-1) Model A LCME (continued)

Summary of replacing an NT6X30 card in RSC-S LCME

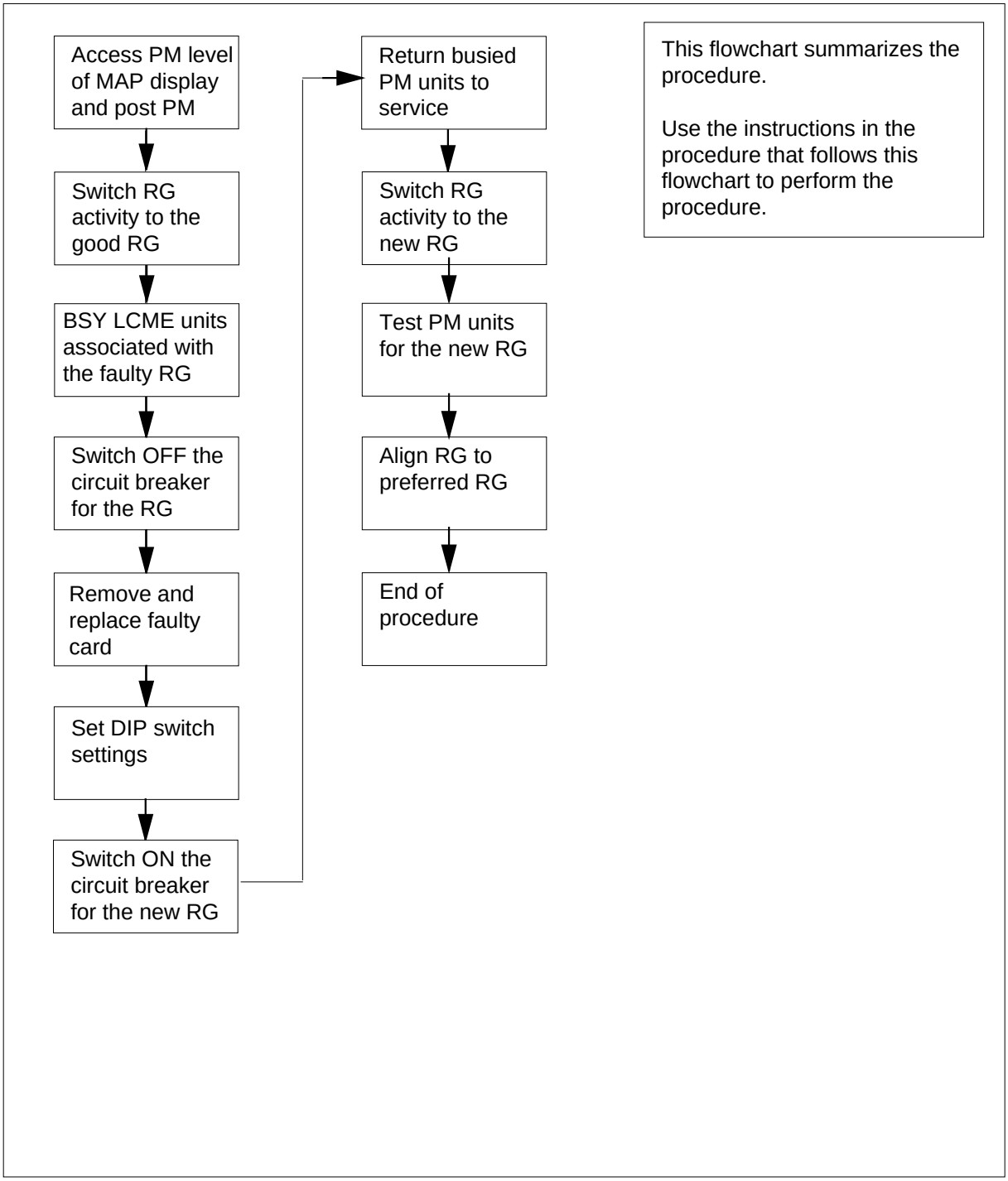

NT6X30 in an RSC-S (DS-1) Model A LCME (continued)

Replacing an NT6X30 in RSC-S LCME

At your Current Location

1

CAUTION
Loss of service
This procedure includes directions to manually busy one or more peripheral module (PM) units. Since manually busying a PM unit can cause service degradation, perform this procedure only if necessary to restore out-of-service components. Otherwise, carry out this procedure during periods of low traffic.

Proceed only if you were either directed to this card replacement procedure from a step in a maintenance procedure, are using the procedure for verifying or accepting cards, or were directed to this procedure by your maintenance support group.

2 Obtain an approved replacement card.

At the MAP terminal

3 Access the PM level and post the LCME by typing

`>MAPCI;MTC;PM;POST LCME lcme_site_name lcme_frame_no lcme_no`

and pressing the Enter key.

where

lcme_site_name
is the name of the site at which the LCME is located

lcme_frame_no
is the number of the frame in which the LCME is located

lcme_no
is the number of the LCME with the faulty card

Example of a MAP display

```
LCME RSCS 14 0 ISTb Links  OOS: Cside 0 Pside 0
Unit 0:  ISTb      /RG:0
Unit 1: InSv      /RG:0

                          11   11  11  RG: Pref 0 ISTb
Drwr:  01  23  45  67  89  0123  45      Stby 1 InSv
       ..  ..  ..  ..  ..  ..  ..  ..
```

NT6X30
in an RSC-S (DS-1) Model A LCME (continued)

4 Check the state of the PM units.

If the PM or PM units are	Do
`offl or SysB`	step 5
One unit is `InSv or ISTb` the other unit is `ISTb or SysB`	step 6

5 Check the state of the other PM in the frame.

If the other PM is	Do
`offl or SysB`	step 37
`InSv or ISTb`	step 6

6 Record the numbers of the PM units serviced by the faulty RG you are replacing.

NT6X30
in an RSC-S (DS-1) Model A LCME (continued)

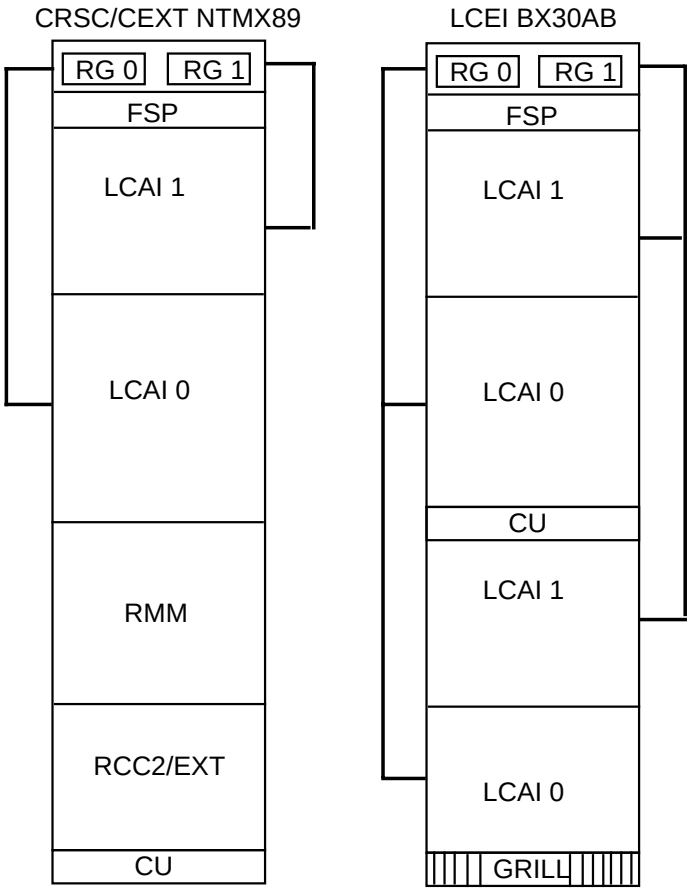

Note: RG 0 is physically associated to unit 0 and RG 1 is physically associated with unit 1.

7 The next action depends on the type of LCM alarm indicated.

If the alarm is	Do
critical	step 9
major or minor	step 8

8 Switch ringing generator activity for the PM unit assigned to the faulty RG by typing

```
>SWRG UNIT unit_no
```

and pressing the Enter key.

where

unit_no
is the PM unit number (0 or 1) assigned to the faulty RG

If the SWRG command	Do
passed	step 9
failed	step 38

9 Manually-busy (ManB) the PM unit associated with the faulty RG by typing

>BSY UNIT unit_no

and pressing the Enter key.

where

unit_no
is the PM unit number (0 or 1) associated with the faulty RG

Note: If clearing a critical alarm choose either unit to work on.

Example of a MAP response:

```
LCME RSCS 14 0 Unit 0 Bsy Passed
```

Note: Repeat this command for the other PM in the frame.

10 The next action depends on how many LCMEs are provisioned in the equipment frame.

If there	Do
is one LCME provisioned in the frame	step 14
two LCMEs provisioned in the frame, and you have not switched RG activity for both LCMEs	step 11
two LCMEs provisioned in the frame, and you have switched RG activity for both LCMEs	step 12

11 Repeat step 3 through step10 for the other LCME provisioned in the equipment frame.

12 Post both PMs in the frame and ensure all units are now on the good RG by typing

>POST LCME site frame_no lcme_no site frame_no lcme_no

and pressing the Enter key.

where

site
is the PM location (alphanumeric) of the first LCME

NT6X30
in an RSC-S (DS-1) Model A LCME (continued)

frame_no
is the frame number (00 to 511) of the first LCME

lcme_no
is the number of the first LCM (0 or 1) in the frame,

site
is the LCM location (alphanumeric) of the second LCME

frame_no
is the frame number (00 to 511) of the second LCME

lcme_no
is the number of the second LCM (0 or 1) in the frame,

Example of command

>POST LCME RSCS 14 0 RSCS 14 1

Example of a MAP display:

```
LCME RSCS 14 0 ISTb Links  OOS: Cside 0 Pside 0
Unit 0: ISTb       /RG:1
Unit 1: InSv      /RG:1
                             11  11  11   RG: Pref 0 ISTb
     Drwr:  01  23  45  67  89  0123  45      Stby 1 InSv
            ..  ..  ..  ..  ..  ..  ..  ..
```

Examine the other PM in the frame by typing

>NEXT

and pressing the Enter key.

Example of a MAP display:

```
LCME RSCS 14 1 ISTb Links  OOS: Cside 0 Pside 0
 Unit 0:ISTb       /RG:1
Unit 1: InSv      /RG:1

                           11   11  11  RG: Pref 0 ISTb
Drwr:  01  23  45  67  89  0123  45      Stby 1 InSv
       ..  ..  ..  ..  ..  ..  ..  ..
```

If both PMs are	Do
on the good RG	step 14
not on the good RG	step 13

13 Repeat step 3 through step 12 for the other PM provisioned in the equipment frame.

NT6X30
in an RSC-S (DS-1) Model A LCME (continued)

At the RCE/LCEI frame

14

WARNING
Static electricity damage
Before removing any cards, put on a wrist strap and connect it to the wrist strap grounding point on the left side of the frame supervisory panel (FSP) of the LCME. This protects the equipment against damage caused by static electricity.

Put on a wrist strap.

15

DANGER
Risk of personal injury
Ensure that you switch off the correct circuit breaker on the FSP as described in the following steps. Do not proceed until you have located and switched OFF the correct circuit breaker for the RG you are replacing.

Turn the circuit breaker that powers the faulty ringing generator OFF. Ensure that ringing generator 0 is on circuit breaker 03-65-01. Ensure that ringing generator 1 is on circuit breaker 03-65-02.

16

WARNING
Do not hold the card by the levers only
Holding a card by the locking levers only may break one or both levers. Once the card has been pulled half way out of the shelf, carefully grasp the card underneath for more secure support and continue to remove the card from the shelf. Avoid touching any wires or internal parts on the card.

Open the locking levers on the face of the card.

NT6X30
in an RSC-S (DS-1) Model A LCME (continued)

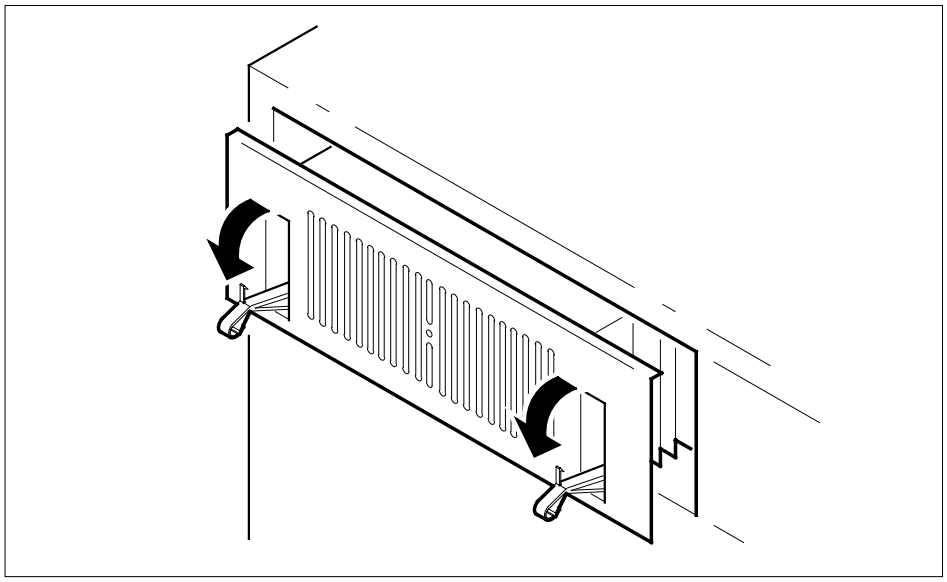

17 While grasping the locking levers, gently pull the card towards you until it protrudes approximately halfway out of the shelf.

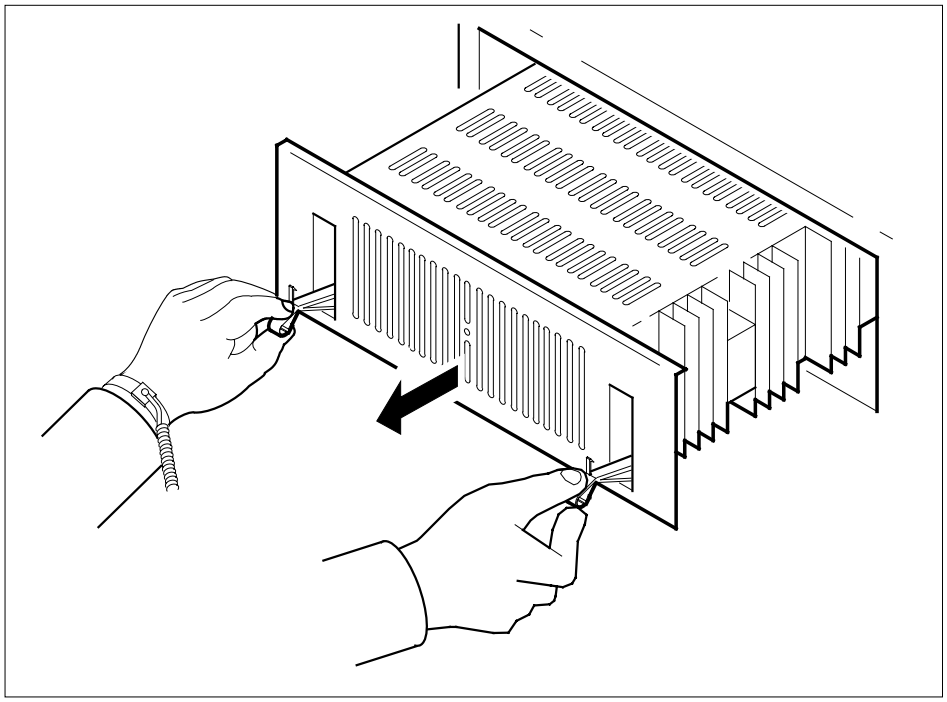

NT6X30
in an RSC-S (DS-1) Model A LCME (continued)

18 While grasping the card by the face plate with one hand and supporting the card from the bottom with the other hand, gently pull the card towards you until it clears the shelf.

19 Place the card you have removed in an electrostatic discharge (ESD) protective container.

20

CAUTION
Loss of service
Incorrect DIP switch setting can result in a service outage. Check the DIP switch layout for the switch numbering and for the ON and OFF position.

WARNING
Potential equipment damage
The newer versions of the ringing generator (versions with suffixes BB, CA, DB, HA, or JA) use switch 8. Ensure that switch 8 is in the ON position on the replacement card.

Set the DIP switch settings on the replacement card.

Note: If you are replacing an older version of the NT6X30 with a newer version (newer versions have suffixes BB, CA, DB, HA, or JA), switch 8 must be in the ON position on the replacement card. If in doubt, contact your next level of support.

21

WARNING
Equipment damage
Take the following precautions when removing or inserting a card:

1. Do not apply direct pressure to the components.
2. Do not force the cards into the slots.

Open the locking levers on the replacement card. Align the card with the right slot in the shelf and gently slide the card into the shelf.

NT6X30
in an RSC-S (DS-1) Model A LCME (continued)

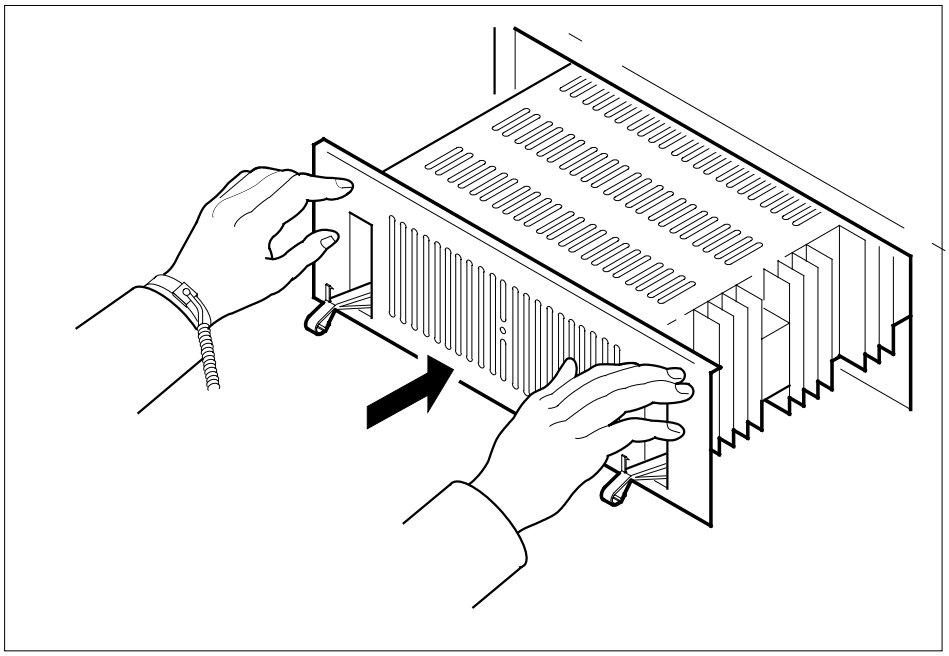

22 Seat and lock the card.

a Using your fingers or thumbs, push on the upper and lower edges of the faceplate to ensure that the card is fully seated in the shelf.

b Close the locking levers to secure the card.

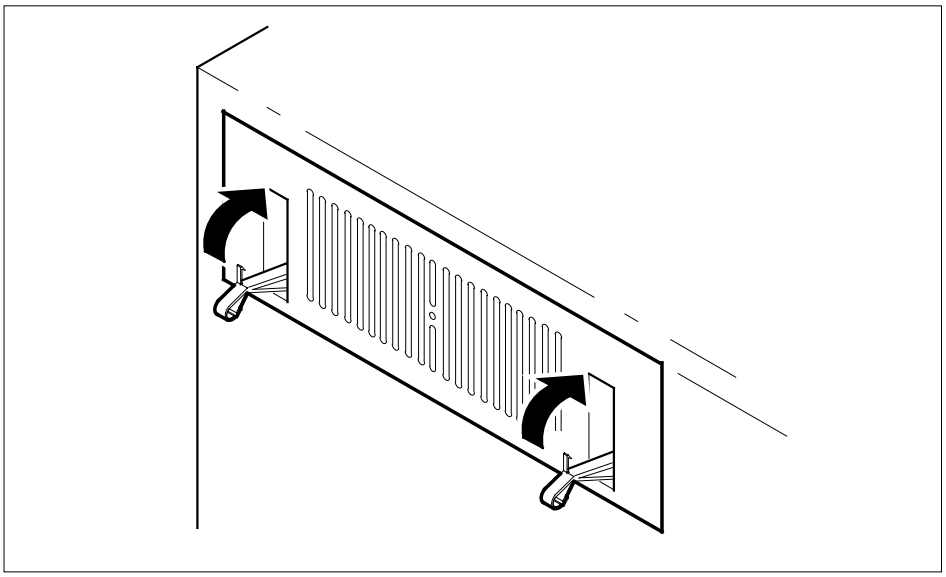

NT6X30
in an RSC-S (DS-1) Model A LCME (continued)

23 Turn circuit breakers back ON. Ensure that ringing generator 0 is on circuit breaker 03-65-01. Ensure that ringing generator 1 is on circuit breaker 03-65-02.

If	Do
the circuit breaker remains switched and the LED light on the FSP goes out	step 24
the circuit breaker trips or the LED light on the FSP does not go out	step 38

24 The next action depends on your reason for performing this procedure.

If you were	Do
directed to this procedure from a maintenance procedure	step 25
not directed to this procedure from a maintenance procedure	step 26

25 Return to the maintenance procedure that sent you to this procedure and continue as directed.

At the MAP terminal

26 Post an LCME in the frame by typing

```
>POST LCME site frame_no lcme_no
```

and pressing the Enter key.

where

site
is the PM location (alphanumeric)

frame_no
is the frame number (00 to 511)

lcme_no
is the number of the LCME unit posted in step 3

27 Wait until there is no system-initiated maintenance on the unit.

28 Return the ManB unit to service by typing

```
>RTS UNIT unit_no
```

and pressing the Enter key.

where

unit_no
is the number (0 or 1) of the LCME unit

NT6X30
in an RSC-S (DS-1) Model A LCME (continued)

29 Switch ringing generator activity to the new NT6X30 card by typing

>SWRG UNIT unit_no

and pressing the Enter key.

where

unit_no
is the PM unit number (0 or 1)

Example of a MAP display:

```
LCME RSCS 14 0 InSv Links  OOS: Cside 0 Pside 0
 Unit 0:InSv        /RG:1
Unit 1: InSv      /RG:1
                             11  11  11 RG: Pref 0 InSv
Drwr:  01  23  45  67  89  01  23  45      Stby 1 InSv
       ..  ..  ..  ..  ..  ..  ..  ..
```

If the SWRG command	Do
passed, and RG activity must be switched for the other unit	step 30
passed, and RG activity is acceptable for both PM units	step 31
failed	step 38

30 Repeat step 29 for the other PM unit.

31 Test the new RG by typing

>TST PM

and pressing the Enter key.

Example of a MAP response:

```
LCME RSCS 14 0 Unit 1  InSvce Tests Initiated
LCME RSCS 14 0 Unit 0  InSvce Tests Initiated
LCME RSCS 14 0 Unit 1  Tst Passed
LCME RSCS 14 0 Unit 0  Tst Passed
```

If the TST command	Do
passed	step 32
failed	step 35

32 Align RG activity to the preferred RG by typing

>SWRG UNIT unit_no

NT6X30 in an RSC-S (DS-1) Model A LCME (end)

and pressing the Enter key.

where

unit_no
is the PM unit number (0 or 1)

Example of a MAP display:

```
LCME RSCS 14 0 InSv Links  OOS: Cside 0 Pside 0
 Unit 0:InSv       /RG:0
Unit 1: InSv      /RG:0

                           11  11  11  RG: Pref 0 InSv
Drwr:  01  23  45  67  89  02  23  45      Stby 1 InSv
       ..  ..  ..  ..  ..  ..  ..  ..
```

33 The next action depends on how many LCMEs are provisioned in the equipment frame.

If there	Do
one LCME provisioned in the frame	step 35
two LCMEs provisioned in the frame, and you have not switched RG activity for both LCMEs	step 34
two LCMEs provisioned in the frame, and you have switched RG activity for both LCMEs	step 35

34 Repeat steps 28 to 33 for the other LCME provisioned in the equipment frame.

35 Send any faulty cards for repair according to local procedure.

36 Record the date the card was replaced, the serial number of the card, and the symptoms that prompted replacement of the card. Go to step 39.

37 Consult office personnel to determine why the component is offline. Continue as directed by office personnel.

38 Obtain further assistance in replacing this card by contacting the personnel responsible for higher level of support.

39 You have successfully completed this procedure. Return to the maintenance procedure that directed you to this card replacement procedure and continue as directed.

NT6X30 in an RSC-S (DS-1) Model B LCME

Application

Use this procedure to replace an NT6X30 card in an RSC-S LCME.

PEC	Suffixes	Name
NT6X30	HA	Ringing Generator

Common procedures

None

Action

The following flowchart is only a summary of the procedure. To replace the card, use the instructions in the procedure that follows the flowchart.

NT6X30
in an RSC-S (DS-1) Model B LCME (continued)

Summary of replacing an NT6X30 card in RSC-S LCME

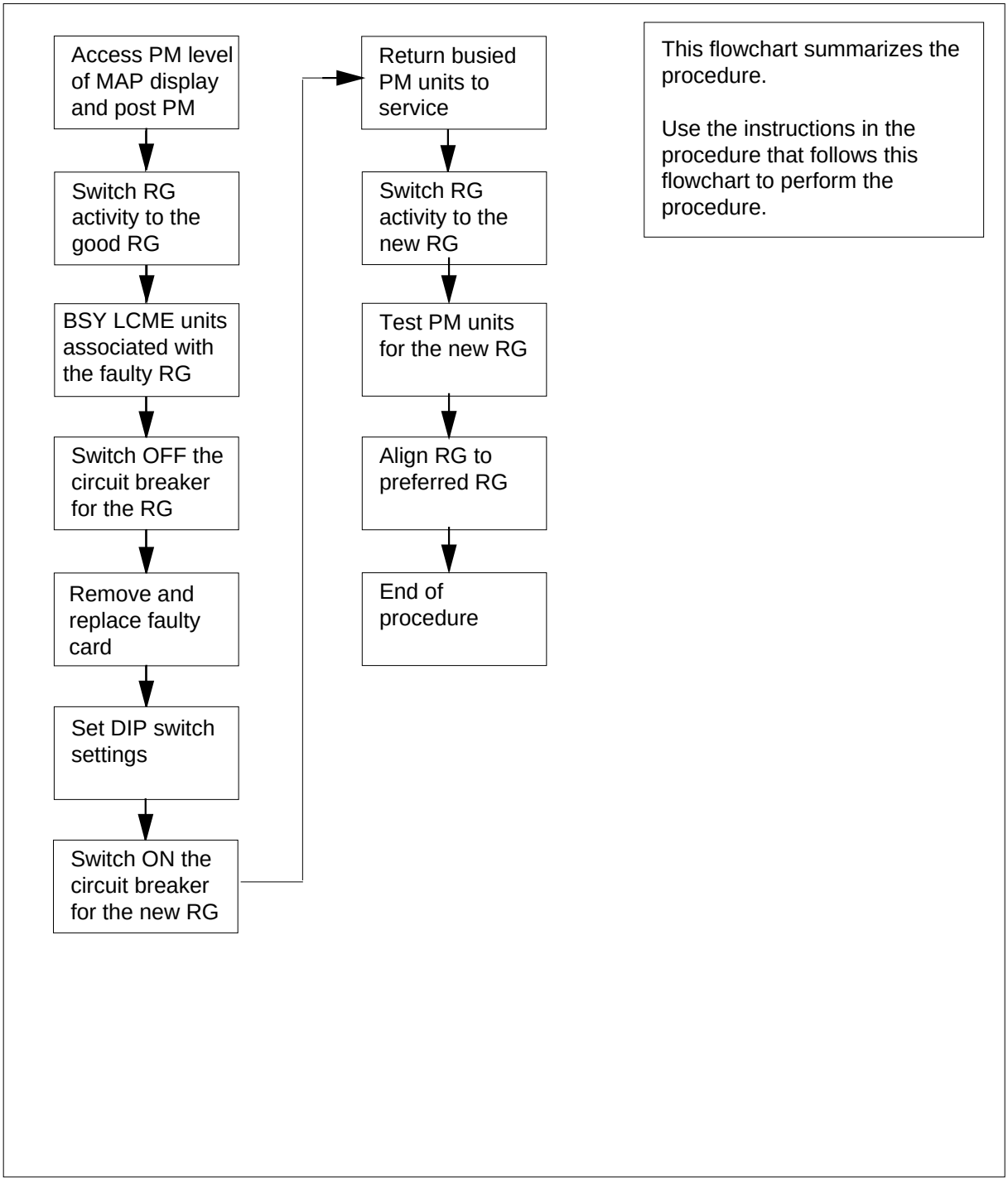

NT6X30
in an RSC-S (DS-1) Model B LCME (continued)

Replacing an NT6X30 in RSC-S LCME

At your Current Location

1

CAUTION
Loss of service
This procedure includes directions to manually busy one or more peripheral module (PM) units. Since manually busying a PM unit can cause service degradation, perform this procedure only if necessary to restore out-of-service components. Otherwise, carry out this procedure during periods of low traffic.

Proceed only if you were either directed to this card replacement procedure from a step in a maintenance procedure, are using the procedure for verifying or accepting cards, or were directed to this procedure by your maintenance support group.

2 Obtain an approved replacement card.

At the MAP terminal

3 Access the PM level and post the LCME by typing

`>MAPCI;MTC;PM;POST LCME lcme_site_name lcme_frame_no lcme_no`

and pressing the Enter key.

where

lcme_site_name
is the name of the site at which the LCME is located

lcme_frame_no
is the number of the frame in which the LCME is located

lcme_no
is the number of the LCME with the faulty card

Example of a MAP display

```
LCME RSC-S 14 0 ISTb Links  OOS: Cside 0 Pside 0
 Unit 0:ISTb       /RG:0
Unit 1: InSv      /RG:0

                              11  11  11  RG: Pref 0 ISTb
Drwr:  01  23  45  67  89  01 23  45      Stby 1 InSv
          ..  ..  ..  ..  ..  ..  ..  ..
```

NT6X30
in an RSC-S (DS-1) Model B LCME (continued)

4 Check the state of the PM units.

If the PM or PM units are	Do
`offl or SysB`	step 5
One unit is `InSv or ISTb` the other unit is `ISTb or SysB`	step 6

5 Check the state of the other PM in the frame.

If the other PM is	Do
`offl or SysB`	step 37
`InSv or ISTb`	step 6

6 Record the numbers of the PM units serviced by the faulty RG you are replacing.

NT6X30
in an RSC-S (DS-1) Model B LCME (continued)

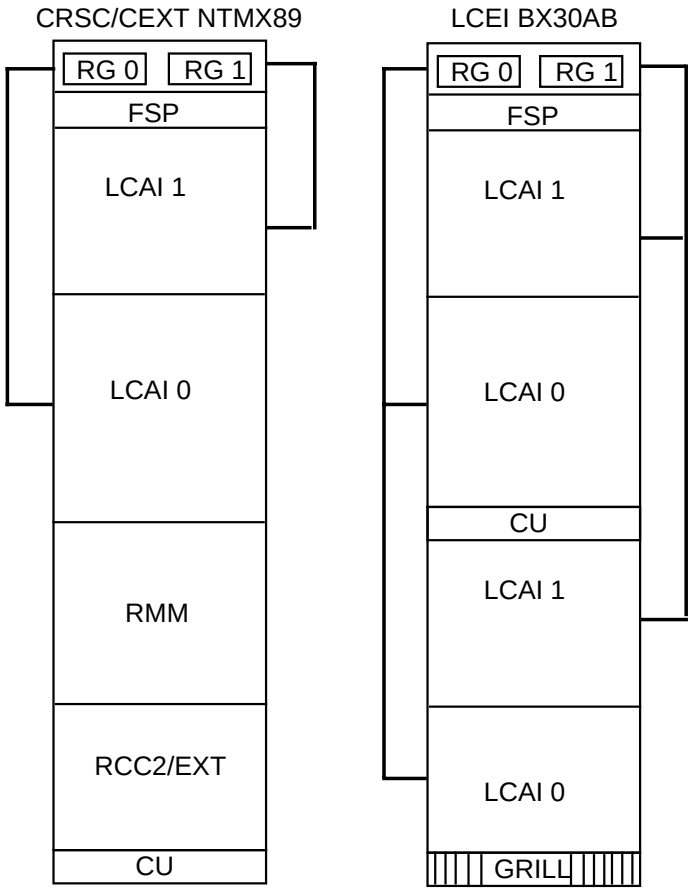

Note: RG 0 is physically associated to unit 0 and RG 1 is physically associated with unit 1.

7 The next action depends on the type of LCM alarm indicated.

If the alarm is	Do
critical	step 9
major or minor	step 8

8 Switch ringing generator activity from the faulty unit, if necessary, by typing

`>SWRG UNIT unit_no`

and pressing the Enter key.

where

unit_no
is the PM unit number (0 or 1) assigned to the faulty RG

If the SWRG command	Do
passed	step 9
failed	step 38

9 Manually-busy (ManB) the PM unit associated with the faulty RG by typing

>BSY UNIT unit_no

and pressing the Enter key.

where

unit_no
is the PM unit number (0 or 1) associated with the faulty RG

Note: If clearing a critical alarm choose either unit to work on.

Example of a MAP response:

```
LCME RSC-S 14 0 Unit 0 Bsy Passed
```

Note: Repeat this command for the other PM in the frame.

10 The next action depends on how many LCMEs are provisioned in the equipment frame.

If there	Do
is one LCME provisioned in the frame	step 14
two LCMEs provisioned in the frame, and you have not switched RG activity for both LCMEs	step 11
two LCMEs provisioned in the frame, and you have switched RG activity for both LCMEs	step 12

11 Repeat step 3 through step 10 for the other LCME provisioned in the equipment frame.

12 Post both PMs in the frame and ensure all units are now on the good RG by typing

>POST LCME site frame_no lcme_no site frame_no lcme_no

and pressing the Enter key.

where

site
is the PM location (alphanumeric) of the first LCME

NT6X30
in an RSC-S (DS-1) Model B LCME (continued)

frame_no
is the frame number (00 to 511) of the first LCME

lcme_no
is the number of the first LCM (0 or 1) in the frame,

site
is the LCM location (alphanumeric) of the second LCME

frame_no
is the frame number (00 to 511) of the second LCME

lcme_no
is the number of the second LCM (0 or 1) in the frame,

Example of command

```
>POST LCME RSC-S 14 0 RSC-S 14 1
```

Example of a MAP display:

```
LCME RSC-S 14 0 ISTb Links  OOS: Cside 0 Pside 0
 Unit 0:ISTb       /RG:1
Unit 1: InSv      /RG:1
                              11  11  11  RG: Pref 0 ISTb
Drwr:  01  23  45  67  89  01  23  45      Stby 1 InSv
       ..  ..  ..  ..  ..  ..  ..  ..
```

Examine the other PM in the frame by typing

```
>NEXT
```

and pressing the Enter key.

Example of a MAP display:

```
LCME RSC-S 14 1 ISTb Links  OOS: Cside 0 Pside 0
 Unit 0:ISTb       /RG:1
Unit 1: InSv      /RG:1
                              11  11  11 RG: Pref 0 ISTb
Drwr:  01  23  45  67  89  01  23  45      Stby 1 InSv
       ..  ..  ..  ..  ..  ..  ..  ..
```

If both PMs are	Do
on the good RG	step 14
not on the good RG	step 13

13 Repeat step 3 through step 12 for the other PM provisioned in the equipment frame.

NT6X30
in an RSC-S (DS-1) Model B LCME (continued)

At the RCE/LCEI frame

14

WARNING
Static electricity damage
Before removing any cards, put on a wrist strap and connect it to the wrist strap grounding point on the left side of the modular supervisory panel (MSP) of the LCME. This protects the equipment against damage caused by static electricity.

Put on a wrist strap.

15

DANGER
Risk of personal injury
Ensure that you switch off the correct circuit breaker on the MSP as described below. Do not proceed until you have located and switched OFF the correct circuit breaker for the RG you are replacing.

Turn the circuit breaker that powers the faulty ringing generator OFF. Ensure that ringing generator 0 is on circuit breaker 03-65-01. Ensure that ringing generator 1 is on circuit breaker 03-65-02.

16

WARNING
Do not hold the card by the levers only
Holding a card by the locking levers only may break one or both levers. Once the card has been pulled half way out of the shelf, carefully grasp the card underneath for more secure support and continue to remove the card from the shelf. Avoid touching any wires or internal parts on the card.

Open the locking levers on the face of the card.

NT6X30
in an RSC-S (DS-1) Model B LCME (continued)

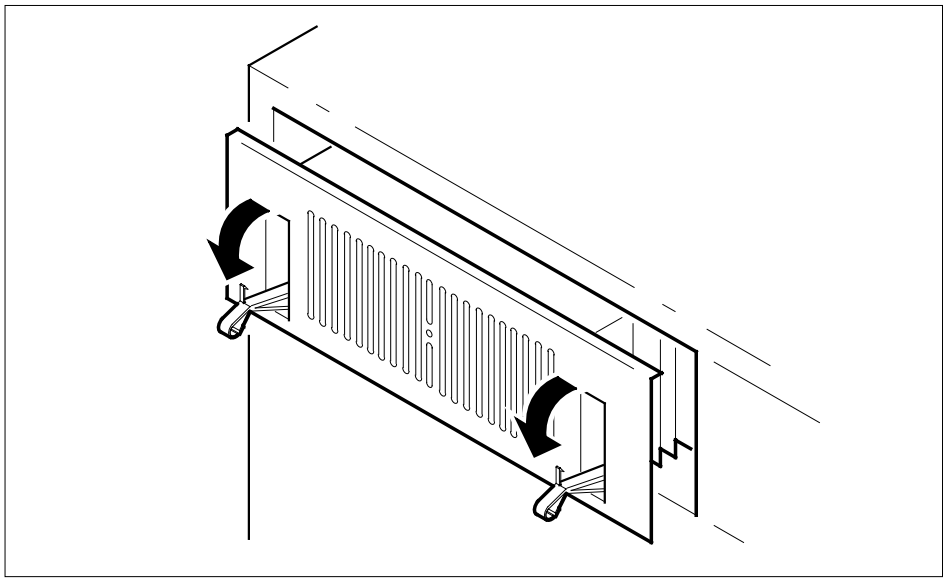

17 While grasping the locking levers, gently pull the card towards you until it protrudes approximately halfway out of the shelf.

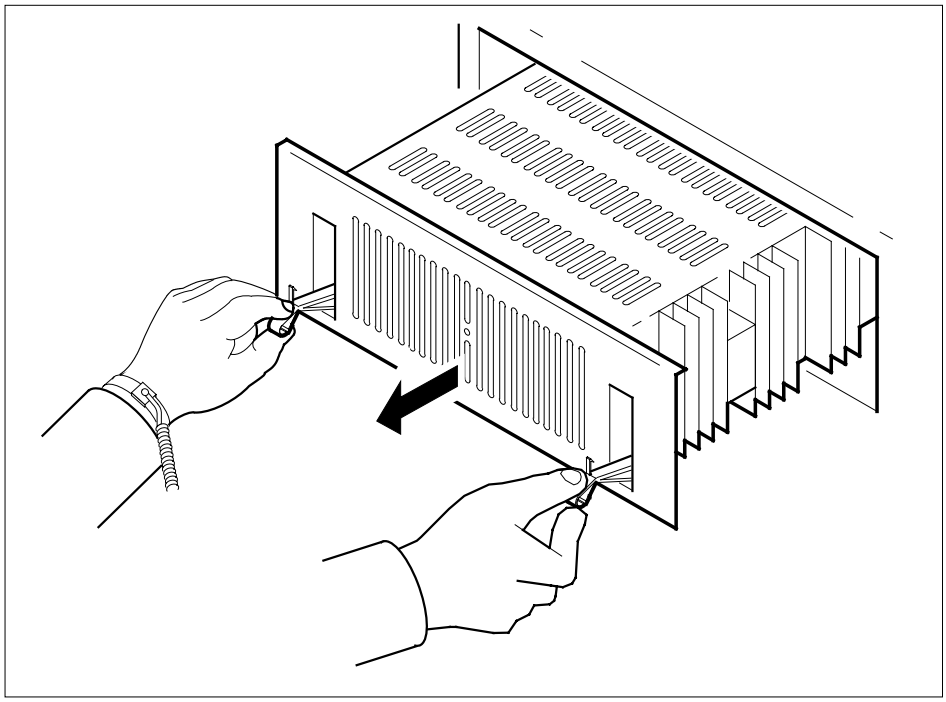

NT6X30
in an RSC-S (DS-1) Model B LCME (continued)

18 While grasping the card by the face plate with one hand and supporting the card from the bottom with the other hand, gently pull the card towards you until it clears the shelf.

19 Place the card you have removed in an electrostatic discharge (ESD) protective container.

20

CAUTION
Loss of service
Incorrect DIP switch setting can result in a service outage. Check the DIP switch layout for the switch numbering and for the ON and OFF position.

WARNING
Potential equipment damage
The newer versions of the ringing generator (versions with suffixes BB, CA, DB, HA, or JA) use switch 8. Ensure that switch 8 is in the ON position on the replacement card.

Set the DIP switch settings on the replacement card.

Note: If you are replacing an older version of the NT6X30 with a newer version (newer versions have suffixes BB, CA, DB, HA, or JA), switch 8 must be in the ON position on the replacement card. If in doubt, contact your next level of support.

21

WARNING
Equipment damage
Take the following precautions when removing or inserting a card:

1. Do not apply direct pressure to the components.
2. Do not force the cards into the slots.

Open the locking levers on the replacement card. Align the card with the right slot in the shelf and gently slide the card into the shelf.

NT6X30
in an RSC-S (DS-1) Model B LCME (continued)

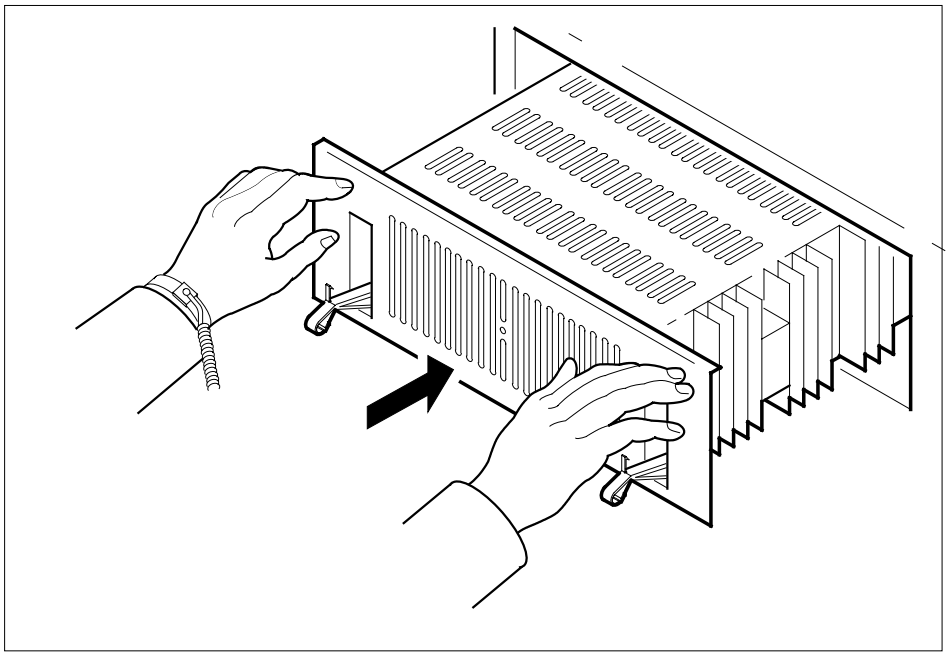

22 Seat and lock the card.

a Using your fingers or thumbs, push on the upper and lower edges of the faceplate to ensure that the card is fully seated in the shelf.

b Close the locking levers to secure the card.

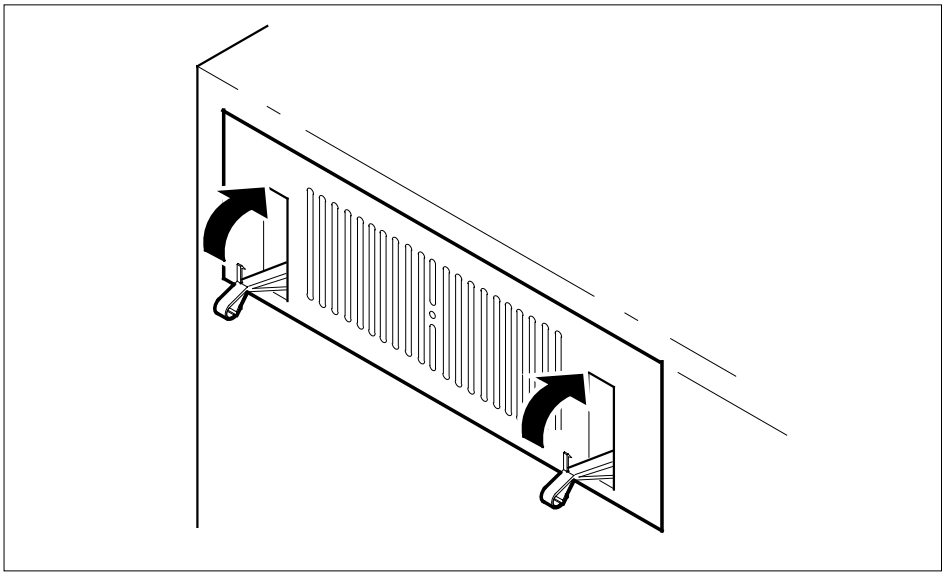

NT6X30
in an RSC-S (DS-1) Model B LCME (continued)

23 Turn circuit breakers back ON. Ensure that ringing generator 0 is on circuit breaker 03-65-01. Ensure that ringing generator 1 is on circuit breaker 03-65-02.

If	Do
the circuit breaker remains switched and the LED light on the FSP goes out	step 24
the circuit breaker trips or the LED light on the FSP does not go out	step 38

24 The next action depends on your reason for performing this procedure.

If you were	Do
directed to this procedure from a maintenance procedure	step 25
not directed to this procedure from a maintenance procedure	step 26

25 Return to the maintenance procedure that sent you to this procedure and continue as directed.

At the MAP terminal

26 Post an LCME in the frame by typing

```
>POST LCME site frame_no lcme_no
```

and pressing the Enter key.

where

site
is the PM location (alphanumeric)

frame_no
is the frame number (00 to 511)

lcme_no
is the number of the LCME unit posted in step 3

27 Wait until there is no system-initiated maintenance on the unit.

28 Return the ManB unit to service by typing

```
>RTS UNIT unit_no
```

and pressing the Enter key.

where

unit_no
is the number (0 or 1) of the LCME unit

NT6X30
in an RSC-S (DS-1) Model B LCME (continued)

29 Switch ringing generator activity to the new NT6X30 card by typing

>SWRG UNIT unit_no

and pressing the Enter key.

where

unit_no
is the PM unit number (0 or 1)

Example of a MAP display:

```
LCME RSC-S 14 0 InSv Links  OOS: Cside 0 Pside 0
 Unit 0:  InSv      /RG:1
Unit 1: InSv      /RG:1

                              11  11  11 RG: Pref 0 InSv
Drwr:  01  23  45  67  89  01  23  45      Stby 1 InSv
       ..  ..  ..  ..  ..  ..  ..  ..
```

If the SWRG command	Do
passed, and RG activity must be switched for the other unit	step 30
passed, and RG activity is acceptable for both PM units	step 31
failed	step 38

30 Repeat step 29 for the other PM unit.

31 Test the new RG by typing

>TST PM

and pressing the Enter key.

Example of a MAP response:

```
 LCME RSC-S 14 0 Unit 1  InSvce Tests Initiated
 LCME RSC-S 14 0 Unit 0  InSvce Tests Initiated
 LCME RSC-S 14 0 Unit1  Tst Passed
 LCME RSC-S 14 0 Unit 0  Tst Passed
```

If the TST command	Do
passed	step 32
failed	step 35

32 Align RG activity to the preferred RG by typing

>SWRG UNIT unit_no

and pressing the Enter key.

where

unit_no
is the PM unit number (0 or 1)

Example of a MAP display:

```
LCME RSC-S 14 0 InSv Links  OOS: Cside 0 Pside 0
  Unit 0: InSv      /RG:0
Unit 1: InSv      /RG:0

                              11  11  11  RG: Pref 0 InSv
Drwr:  01  23  45  67  89  01 23  45      Stby 1 InSv
       ..  ..  ..  ..  ..  .. ..  ..
```

33 The next action depends on how many LCMEs are provisioned in the equipment frame.

If there	Do
one LCME provisioned in the frame	step 35
two LCMEs provisioned in the frame, and you have not switched RG activity for both LCMEs	step 34
two LCMEs provisioned in the frame, and you have switched RG activity for both LCMEs	step 35

34 Repeat steps 28 to 33 for the other LCME provisioned in the equipment frame.

35 Send any faulty cards for repair according to local procedure.

36 Record the date the card was replaced, the serial number of the card, and the symptoms that prompted replacement of the card. Go to step 39.

37 Consult office personnel to determine why the component is offline. Continue as directed by office personnel.

38 Obtain further assistance in replacing this card by contacting the personnel responsible for higher level of support.

39 You have successfully completed this procedure. Return to the maintenance procedure that directed you to this card replacement procedure and continue as directed.

NT6X30
in an RSC-S (PCM-30) Model A LCME

Application

Use this procedure to replace an NT6X30 card in an RSC-S LCME.

PEC	Suffixes	Name
NT6X30	HA	Ringing Generator

Common procedures

None

Action

The following flowchart is only a summary of the procedure. To replace the card, use the instructions in the procedure that follows the flowchart.

NT6X30
in an RSC-S (PCM-30) Model A LCME (continued)

Summary of replacing an NT6X30 card in RSC-S LCME

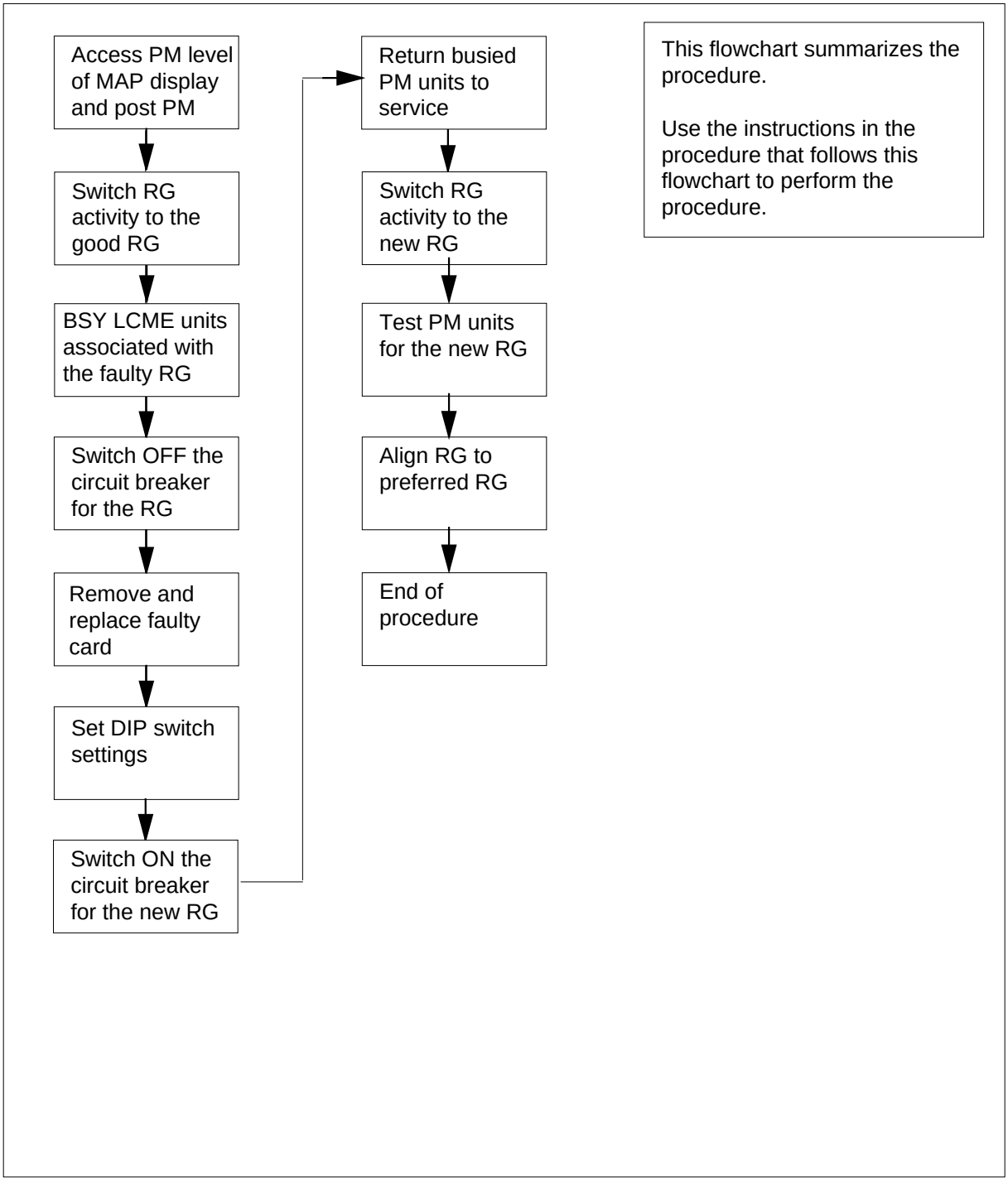

NT6X30
in an RSC-S (PCM-30) Model A LCME (continued)

Replacing an NT6X30 in RSC-S LCME

At your Current Location

1

CAUTION
Loss of service
This procedure includes directions to manually busy one or more peripheral module (PM) units. Since manually busying a PM unit can cause service degradation, perform this procedure only if necessary to restore out-of-service components. Otherwise, carry out this procedure during periods of low traffic.

Proceed only if you were either directed to this card replacement procedure from a step in a maintenance procedure, are using the procedure for verifying or accepting cards, or were directed to this procedure by your maintenance support group.

2 Obtain an approved replacement card.

At the MAP terminal

3 Access the PM level and post the LCME by typing

`>MAPCI;MTC;PM;POST LCME lcme_site_name lcme_frame_no lcme_no`

and pressing the Enter key.

where

lcme_site_name
is the name of the site at which the LCME is located

lcme_frame_no
is the number of the frame in which the LCME is located

lcme_no
is the number of the LCME with the faulty card

Example of a MAP display

```
_CME RSC-S 14 0 ISTb Links  OOS: Cside 0 Pside 0
  Unit 0: ISTb      /RG:0
Jnit 1: InSv      /RG:0

                              11  11  11 RG: Pref 0 ISTb
Orwr:  01  23  45  67  89  01 23  45      Stby 1 InSv
       ..  ..  ..  ..  ..  .. ..  ..
```

NT6X30
in an RSC-S (PCM-30) Model A LCME (continued)

4 Check the state of the PM units.

If the PM or PM units are	Do
offl or SysB	step 5
One unit is InSv or ISTb the other unit is ISTb or SysB	step 6

5 Check the state of the other PM in the frame.

If the other PM is	Do
offl or SysB	step 37
InSv or ISTb	step 6

6 Record the numbers of the PM units serviced by the faulty RG you are replacing.

NT6X30
in an RSC-S (PCM-30) Model A LCME (continued)

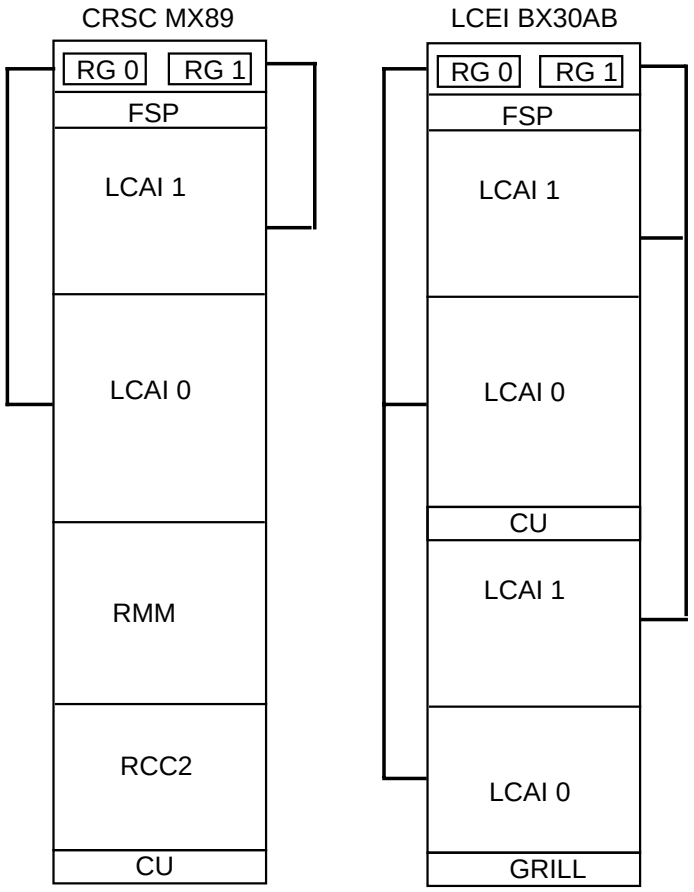

Note: RG 0 is physically associated to unit 0 and RG 1 is physically associated with unit 1.

7 The next action depends on the type of LCM alarm indicated.

If the alarm is	Do
critical	step 9
major or minor	step 8

8 Switch ringing generator activity for the PM unit assigned to the faulty RG by typing

```
>SWRG UNIT unit_no
```

and pressing the Enter key.

where

unit_no
is the PM unit number (0 or 1) assigned to the faulty RG

If the SWRG command	Do
passed	step 9
failed	step 38

9 Manually-busy (ManB) the PM unit associated with the faulty RG by typing

>BSY UNIT unit_no

and pressing the Enter key.

where

unit_no
is the PM unit number (0 or 1) associated with the faulty RG

Note: If clearing a critical alarm choose either unit to work on.

Example of a MAP response:

```
LCME RSC-S 14 0 Unit 0 Bsy Passed
```

Note: Repeat this command for the other PM in the frame.

10 The next action depends on how many LCMEs are provisioned in the equipment frame.

If there	Do
is one LCME provisioned in the frame	step 14
two LCMEs provisioned in the frame, and you have not switched RG activity for both LCMEs	step 11
two LCMEs provisioned in the frame, and you have switched RG activity for both LCMEs	step 12

11 Repeat step 3 through step 10 for the other LCME provisioned in the equipment frame.

12 Post both PMs in the frame and ensure all units are now on the good RG by typing

>POST LCME site frame_no lcme_no site frame_no lcme_no

and pressing the Enter key.

where

site
is the PM location (alphanumeric) of the first LCME

NT6X30
in an RSC-S (PCM-30) Model A LCME (continued)

frame_no
is the frame number (00 to 511) of the first LCME

lcme_no
is the number of the first LCM (0 or 1) in the frame,

site
is the LCM location (alphanumeric) of the second LCME

frame_no
is the frame number (00 to 511) of the second LCME

lcme_no
is the number of the second LCM (0 or 1) in the frame,

Example of command

```
>POST LCME RSC-S 14 0 RSC-S 14 1
```

Example of a MAP display:

```
LCME RSC-S 14 0 ISTb Links  OOS: Cside 0 Pside 0
  Unit 0: ISTb      /RG:1
Unit 1: InSv      /RG:1

                             11  11  11  RG: Pref 0 ISTb
Drwr:  01  23  45  67  89  01 23  45       Stby 1 InSv
       ..  ..  ..  ..  ..  .. ..  ..
```

Examine the other PM in the frame by typing

```
>NEXT
```

and pressing the Enter key.

Example of a MAP display:

```
LCME RSC-S 14 1 ISTb Links  OOS: Cside 0 Pside 0
  Unit 0: ISTb      /RG:1
Unit 1: InSv      /RG:1
                             11  11  11  RG: Pref 0 ISTb
Drwr:  01  23  45  67  89  01 23  45       Stby 1 InSv
       ..  ..  ..  ..  ..  .. ..  ..
```

If both PMs are	Do
on the good RG	step 14
not on the good RG	step 13

13 Repeat step 3 through step 12 for the other PM provisioned in the equipment frame.

NT6X30
in an RSC-S (PCM-30) Model A LCME (continued)

At the RCE/LCEI frame

14

WARNING
Static electricity damage
Before removing any cards, put on a wrist strap and connect it to the wrist strap grounding point on the left side of the frame supervisory panel (FSP) of the LCME. This protects the equipment against damage caused by static electricity.

Put on a wrist strap.

15

DANGER
Risk of personal injury
Ensure that you switch off the correct circuit breaker on the FSP as described in the following steps. Do not proceed until you have located and switched OFF the correct circuit breaker for the RG you are replacing.

Turn the circuit breaker that powers the faulty ringing generator OFF. Ensure that ringing generator 0 is on circuit breaker 03-65-01. Ensure that ringing generator 1 is on circuit breaker 03-65-02.

16

WARNING
Do not hold the card by the levers only
Holding a card by the locking levers only may break one or both levers. Once the card has been pulled half way out of the shelf, carefully grasp the card underneath for more secure support and continue to remove the card from the shelf. Avoid touching any wires or internal parts on the card.

Open the locking levers on the face of the card.

NT6X30
in an RSC-S (PCM-30) Model A LCME (continued)

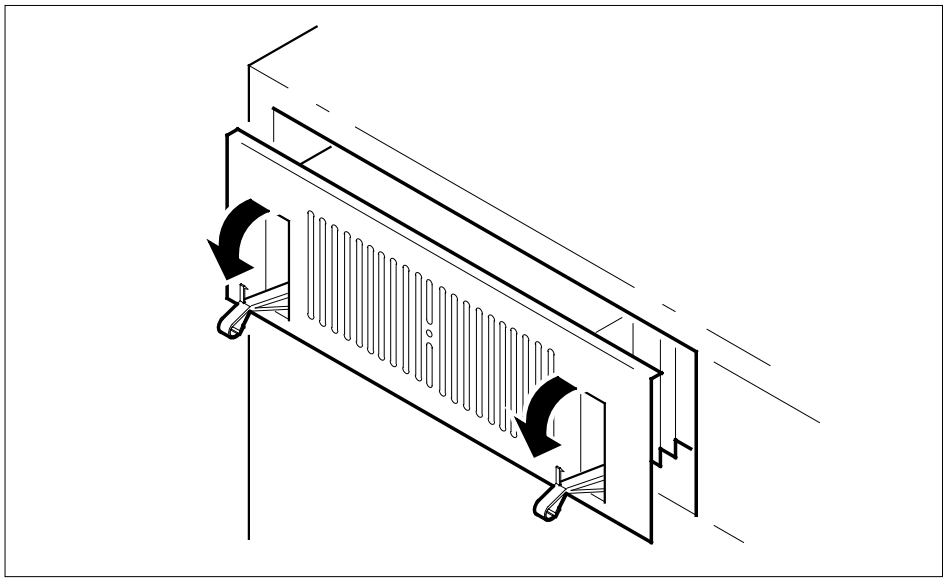

17 While grasping the locking levers, gently pull the card towards you until it protrudes approximately halfway out of the shelf.

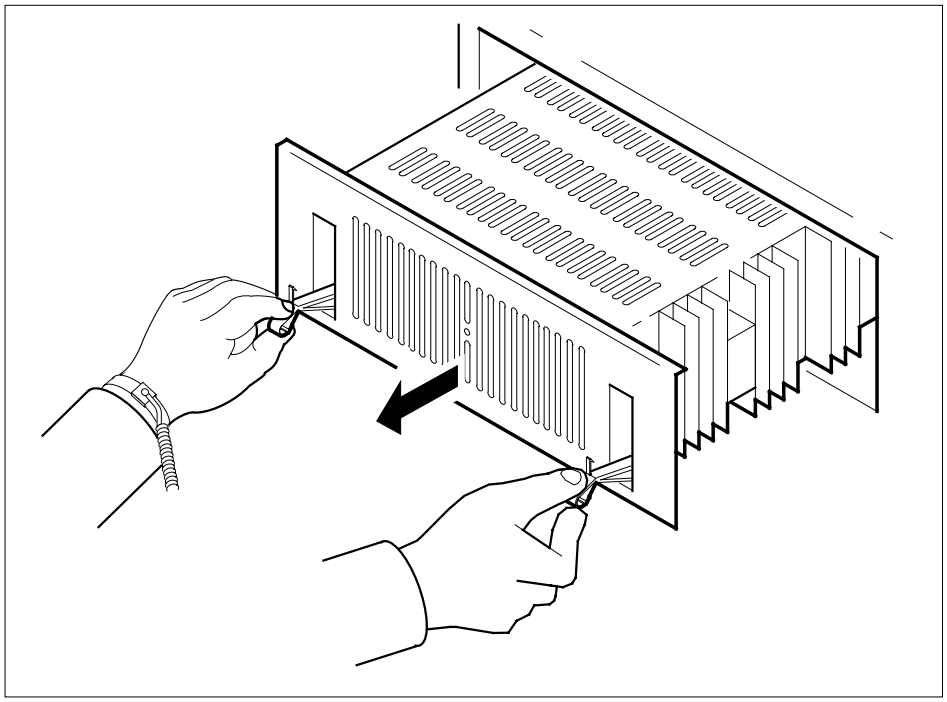

NT6X30
in an RSC-S (PCM-30) Model A LCME (continued)

18 While grasping the card by the face plate with one hand and supporting the card from the bottom with the other hand, gently pull the card towards you until it clears the shelf.

19 Place the card you have removed in an electrostatic discharge (ESD) protective container.

20

CAUTION
Loss of service
Incorrect DIP switch setting can result in a service outage. Check the DIP switch layout for the switch numbering and for the ON and OFF position.

WARNING
Potential equipment damage
The newer versions of the ringing generator (versions with suffixes BB, CA, DB, HA, or JA) use switch 8. Ensure that switch 8 is in the ON position on the replacement card.

Set the DIP switch settings on the replacement card.

Note: If you are replacing an older version of the NT6X30 with a newer version (newer versions have suffixes BB, CA, DB, HA, or JA), switch 8 must be in the ON position on the replacement card. If in doubt, contact your next level of support.

21

WARNING
Equipment damage
Take the following precautions when removing or inserting a card:

1. Do not apply direct pressure to the components.
2. Do not force the cards into the slots.

Open the locking levers on the replacement card. Align the card with the right slot in the shelf and gently slide the card into the shelf.

NT6X30
in an RSC-S (PCM-30) Model A LCME (continued)

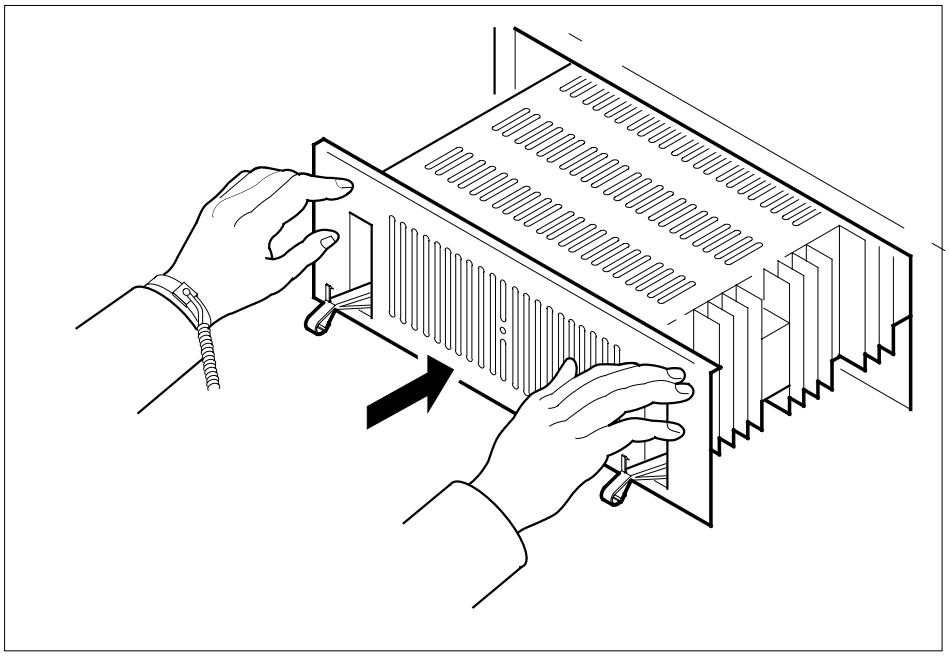

22 Seat and lock the card.

a Using your fingers or thumbs, push on the upper and lower edges of the faceplate to ensure that the card is fully seated in the shelf.

b Close the locking levers to secure the card.

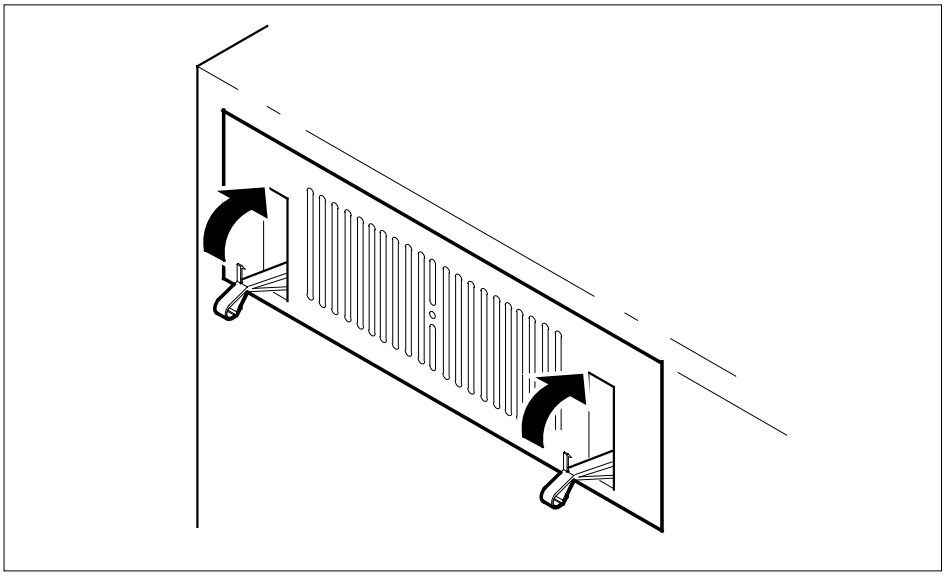

23 Turn circuit breakers back ON. Ensure that ringing generator 0 is on circuit breaker 03-65-01. Ensure that ringing generator 1 is on circuit breaker 03-65-02.

If	Do
the circuit breaker remains switched and the LED light on the FSP goes out	step 24
the circuit breaker trips or the LED light on the FSP does not go out	step 38

24 The next action depends on your reason for performing this procedure.

If you were	Do
directed to this procedure from a maintenance procedure	step 25
not directed to this procedure from a maintenance procedure	step 26

25 Return to the maintenance procedure that sent you to this procedure and continue as directed.

At the MAP terminal

26 Post an LCME in the frame by typing

`>POST LCME site frame_no lcme_no`

and pressing the Enter key.

where

site
is the PM location (alphanumeric)

frame_no
is the frame number (00 to 511)

lcme_no
is the number of the LCME unit posted in step 3

27 Wait until there is no system-initiated maintenance on the unit.

28 Return the ManB unit to service by typing

`>RTS UNIT unit_no`

and pressing the Enter key.

where

unit_no
is the number (0 or 1) of the LCME unit

NT6X30
in an RSC-S (PCM-30) Model A LCME (continued)

29 Switch ringing generator activity to the new NT6X30 card by typing

>SWRG UNIT unit_no

and pressing the Enter key.

where

unit_no
is the PM unit number (0 or 1)

Example of a MAP display:

```
LCME RSC-S 14 0 InSv Links  OOS: Cside 0 Pside 0
  Unit 0InSv       /RG:1
Unit 1: InSv      /RG:1
                              11  11  11  RG: Pref 0 InSv
Drwr:  01  23  45  67  89  01  23  45       Stby 1 InSv
       ..  ..  ..  ..  ..  ..  ..  ..
```

If the SWRG command	Do
passed, and RG activity must be switched for the other unit	step 30
passed, and RG activity is acceptable for both PM units	step 31
failed	step 38

30 Repeat step 29 for the other PM unit.

31 Test the new RG by typing

>TST PM

and pressing the Enter key.

Example of a MAP response:

```
LCME RSC-S 14 0 Unit 1  InSvce Tests Initiated
LCME RSC-S 14 0 Unit 0  InSvce Tests Initiated
LCME RSC-S 14 0 Unit1  Tst Passed
LCME RSC-S 14 0 Unit 0  Tst Passed
```

If the TST command	Do
passed	step 32
failed	step 35

32 Align RG activity to the preferred RG by typing

>SWRG UNIT unit_no

and pressing the Enter key.

where

unit_no
is the PM unit number (0 or 1)

Example of a MAP display:

```
LCME RSC-S 14 0 InSv Links  OOS: Cside 0 Pside 0
 Unit 0:  InSv      /RG:0
Unit 1: InSv      /RG:0

                              11  11  11  RG: Pref 0 InSv
Drwr:  01  23  45  67  89  01 23  45      Stby 1 InSv
       ..  ..  ..  ..  ..  .. ..  ..  ..
```

33 The next action depends on how many LCMEs are provisioned in the equipment frame.

If there	Do
one LCME provisioned in the frame	step 35
two LCMEs provisioned in the frame, and you have not switched RG activity for both LCMEs	step 34
two LCMEs provisioned in the frame, and you have switched RG activity for both LCMEs	step 35

34 Repeat steps 28 to 33 for the other LCME provisioned in the equipment frame.

35 Send any faulty cards for repair according to local procedure.

36 Record the date the card was replaced, the serial number of the card, and the symptoms that prompted replacement of the card. Go to step 39.

37 Consult office personnel to determine why the component is offline. Continue as directed by office personnel.

38 Obtain further assistance in replacing this card by contacting the personnel responsible for higher level of support.

39 You have successfully completed this procedure. Return to the maintenance procedure that directed you to this card replacement procedure and continue as directed.

NT6X30
in an RSC-S (PCM-30) Model B LCME

Application

Use this procedure to replace an NT6X30 card in an RSC-S LCME.

PEC	Suffixes	Name
NT6X30	HA	Ringing Generator

Common procedures

None

Action

The following flowchart is only a summary of the procedure. To replace the card, use the instructions in the procedure that follows the flowchart.

NT6X30
in an RSC-S (PCM-30) Model B LCME (continued)

Summary of replacing an NT6X30 card in RSC-S LCME

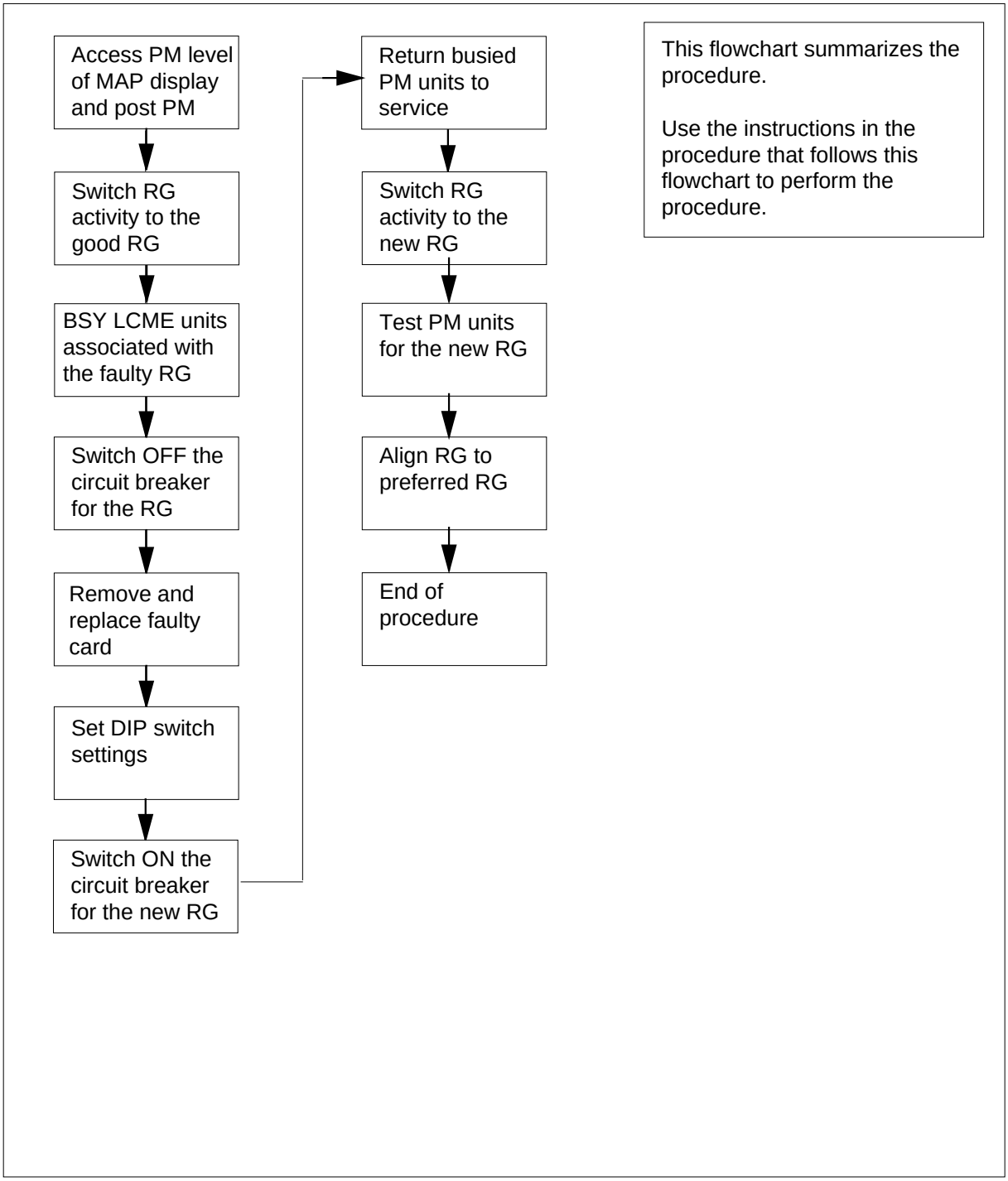

NT6X30
in an RSC-S (PCM-30) Model B LCME (continued)

Replacing an NT6X30 in RSC-S LCME

At your Current Location

1

CAUTION
Loss of service
This procedure includes directions to manually busy one or more peripheral module (PM) units. Since manually busying a PM unit can cause service degradation, perform this procedure only if necessary to restore out-of-service components. Otherwise, carry out this procedure during periods of low traffic.

Proceed only if you were either directed to this card replacement procedure from a step in a maintenance procedure, are using the procedure for verifying or accepting cards, or were directed to this procedure by your maintenance support group.

2 Obtain an approved replacement card.

At the MAP terminal

3 Access the PM level and post the LCME by typing

`>MAPCI;MTC;PM;POST LCME lcme_site_name lcme_frame_no lcme_no`

and pressing the Enter key.

where

lcme_site_name
is the name of the site at which the LCME is located

lcme_frame_no
is the number of the frame in which the LCME is located

lcme_no
is the number of the LCME with the faulty card

Example of a MAP display

```
LCME RSC-S 14 0 ISTb Links  OOS: Cside 0 Pside 0
Unit 0: ISTb      /RG:0
Unit 1: InSv      /RG:0

                                11  11  11  RG: Pref 0 ISTb
Drwr:  01  23  45  67  89  01   23  45      Stby 1 InSv
       ..  ..  ..  ..  ..  ..  ..  ..
```

NT6X30
in an RSC-S (PCM-30) Model B LCME (continued)

4 Check the state of the PM units.

If the PM or PM units are	Do
`offl or SysB`	step 5
One unit is `InSv or ISTb` the other unit is `ISTb or SysB`	step 6

5 Check the state of the other PM in the frame.

If the other PM is	Do
`offl or SysB`	step 37
`InSv or ISTb`	step 6

6 Record the numbers of the PM units serviced by the faulty RG you are replacing.

NT6X30
in an RSC-S (PCM-30) Model B LCME (continued)

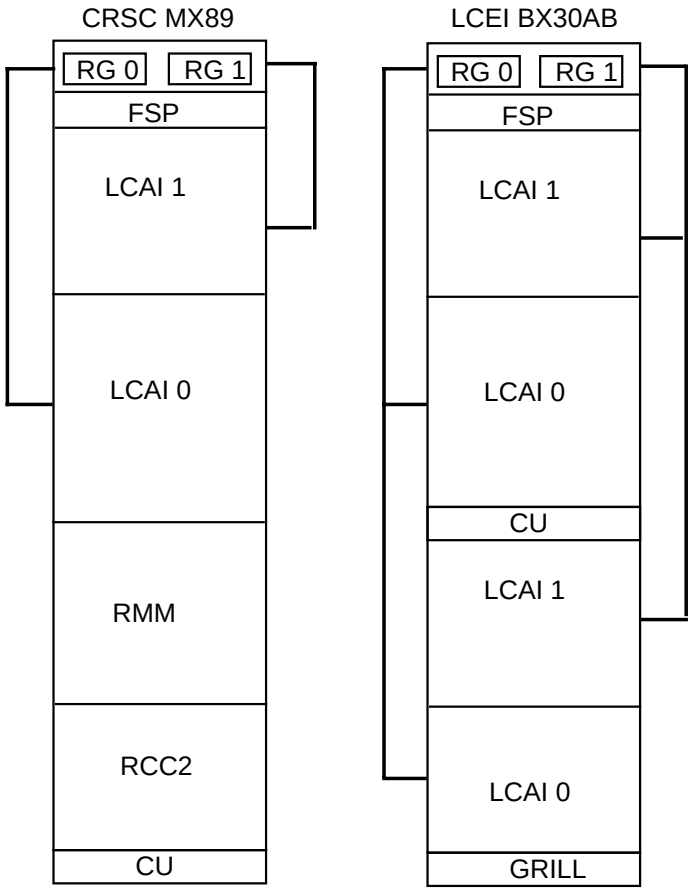

Note: RG 0 is physically associated to unit 0 and RG 1 is physically associated with unit 1.

7 The next action depends on the type of LCM alarm indicated.

If the alarm is	Do
critical	step 9
major or minor	step 8

8 Switch ringing generator activity from the faulty unit, if necessary, by typing

`>SWRG UNIT unit_no`

and pressing the Enter key.

where

unit_no
is the PM unit number (0 or 1) assigned to the faulty RG

If the SWRG command	Do
passed	step 9
failed	step 38

9 Manually-busy (ManB) the PM unit associated with the faulty RG by typing

>BSY UNIT unit_no

and pressing the Enter key.

where

unit_no
is the PM unit number (0 or 1) associated with the faulty RG

Note: If clearing a critical alarm choose either unit to work on.

Example of a MAP response:

```
LCME RSC-S 14 0 Unit 0 Bsy Passed
```

Note: Repeat this command for the other PM in the frame.

10 The next action depends on how many LCMEs are provisioned in the equipment frame.

If there	Do
is one LCME provisioned in the frame	step 14
two LCMEs provisioned in the frame, and you have not switched RG activity for both LCMEs	step 11
two LCMEs provisioned in the frame, and you have switched RG activity for both LCMEs	step 12

11 Repeat step 3 through step 10 for the other LCME provisioned in the equipment frame.

12 Post both PMs in the frame and ensure all units are now on the good RG by typing

>POST LCME site frame_no lcme_no site frame_no lcme_no

and pressing the Enter key.

where

site
is the PM location (alphanumeric) of the first LCME

NT6X30
in an RSC-S (PCM-30) Model B LCME (continued)

frame_no
is the frame number (00 to 511) of the first LCME

lcme_no
is the number of the first LCM (0 or 1) in the frame,

site
is the LCM location (alphanumeric) of the second LCME

frame_no
is the frame number (00 to 511) of the second LCME

lcme_no
is the number of the second LCM (0 or 1) in the frame,

Example of command

```
>POST LCME RSC-S 14 0 RSC-S 14 1
```

Example of a MAP display:

```
LCME RSC-S 14 0 ISTb Links  OOS: Cside 0 Pside 0
Unit 0:ISTb      /RG:1
Unit 1: InSv      /RG:1

                              11  11  11  RG: Pref 0 ISTb
Drwr:  01  23  45  67  89  01   23  45      Stby 1 InSv
       ..  ..  ..  ..  ..  ..  ..  ..
```

Examine the other PM in the frame by typing

```
>NEXT
```

and pressing the Enter key.

Example of a MAP display:

```
LCME RSC-S 14 1 ISTb Links  OOS: Cside 0 Pside 0
Unit 0: ISTb      /RG:1
Unit 1: InSv      /RG:1

                              11  11  11  RG:Pref 0 ISTb
Drwr:  01  23  45  67  89  01   23  45      Stby 1 InSv
       ..  ..  ..  ..  ..  ..  ..  ..
```

If both PMs are	Do
on the good RG	step 14
not on the good RG	step 13

13 Repeat step 3 through step 12 for the other PM provisioned in the equipment frame.

NT6X30
in an RSC-S (PCM-30) Model B LCME (continued)

At the RCE/LCEI frame

14

WARNING
Static electricity damage
Before removing any cards, put on a wrist strap and connect it to the wrist strap grounding point on the left side of the modular supervisory panel (MSP) of the LCME. This protects the equipment against damage caused by static electricity.

Put on a wrist strap.

15

DANGER
Risk of personal injury
Ensure that you switch off the correct circuit breaker on the MSP as described below. Do not proceed until you have located and switched OFF the correct circuit breaker for the RG you are replacing.

Turn the circuit breaker that powers the faulty ringing generator OFF. Ensure that ringing generator 0 is on circuit breaker 03-65-01. Ensure that ringing generator 1 is on circuit breaker 03-65-02.

16

DANGER
Do not hold the card by the levers only
Holding a card by the locking levers only may break one or both levers. Once the card has been pulled half way out of the shelf, carefully grasp the card underneath for more secure support and continue to remove the card from the shelf. Avoid touching any wires or internal parts on the card.

Open the locking levers on the face of the card.

NT6X30
in an RSC-S (PCM-30) Model B LCME (continued)

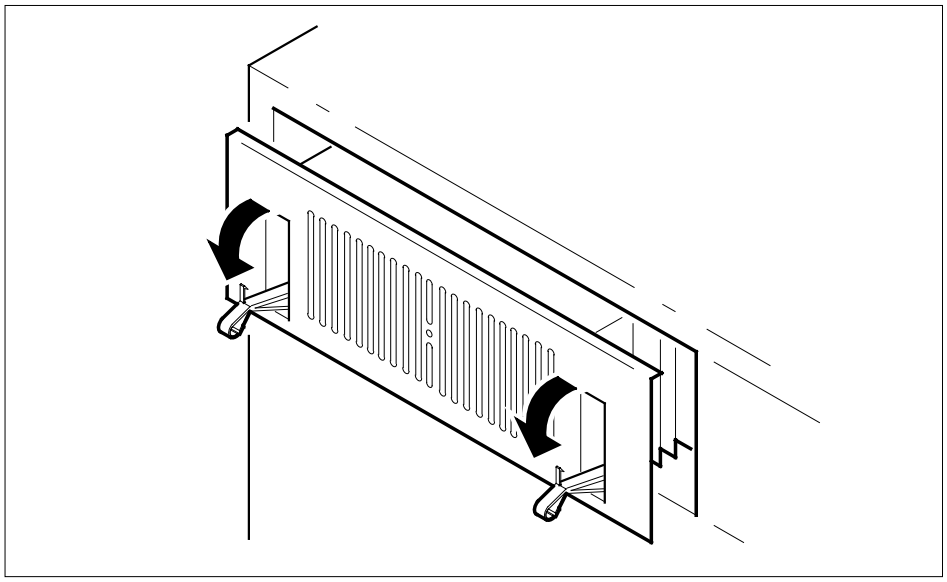

17 While grasping the locking levers, gently pull the card towards you until it protrudes approximately halfway out of the shelf.

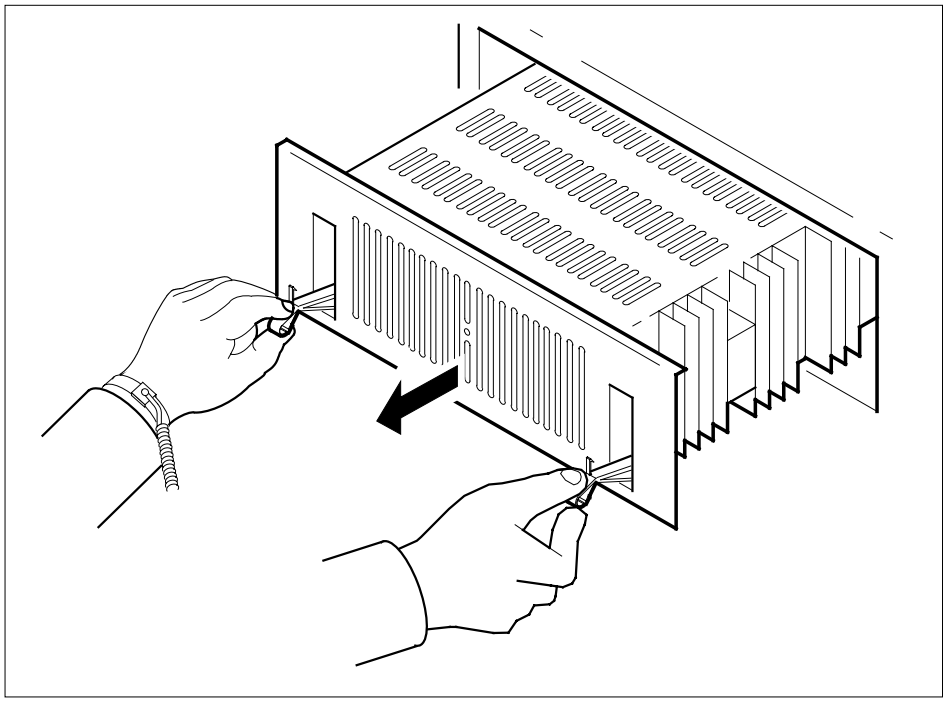

NT6X30
in an RSC-S (PCM-30) Model B LCME (continued)

18 While grasping the card by the face plate with one hand and supporting the card from the bottom with the other hand, gently pull the card towards you until it clears the shelf.

19 Place the card you have removed in an electrostatic discharge (ESD) protective container.

20

CAUTION
Loss of service
Incorrect DIP switch setting can result in a service outage. Check the DIP switch layout for the switch numbering and for the ON and OFF position.

DANGER
Potential equipment damage
The newer versions of the ringing generator (versions with suffixes BB, CA, DB, HA, or JA) use switch 8. Ensure that switch 8 is in the ON position on the replacement card.

Set the DIP switch settings on the replacement card.

Note: If you are replacing an older version of the NT6X30 with a newer version (newer versions have suffixes BB, CA, DB, HA, or JA), switch 8 must be in the ON position on the replacement card. If in doubt, contact your next level of support.

21

DANGER
Equipment damage
Take the following precautions when removing or inserting a card:

1. Do not apply direct pressure to the components.
2. Do not force the cards into the slots.

Open the locking levers on the replacement card. Align the card with the right slot in the shelf and gently slide the card into the shelf.

NT6X30
in an RSC-S (PCM-30) Model B LCME (continued)

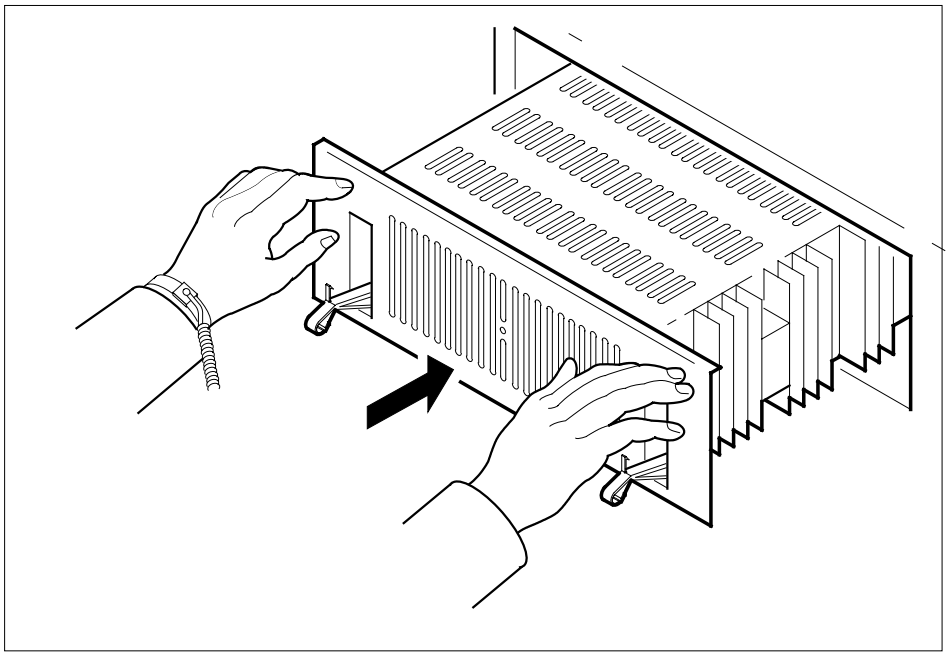

22 Seat and lock the card.

a Using your fingers or thumbs, push on the upper and lower edges of the faceplate to ensure that the card is fully seated in the shelf.

b Close the locking levers to secure the card.

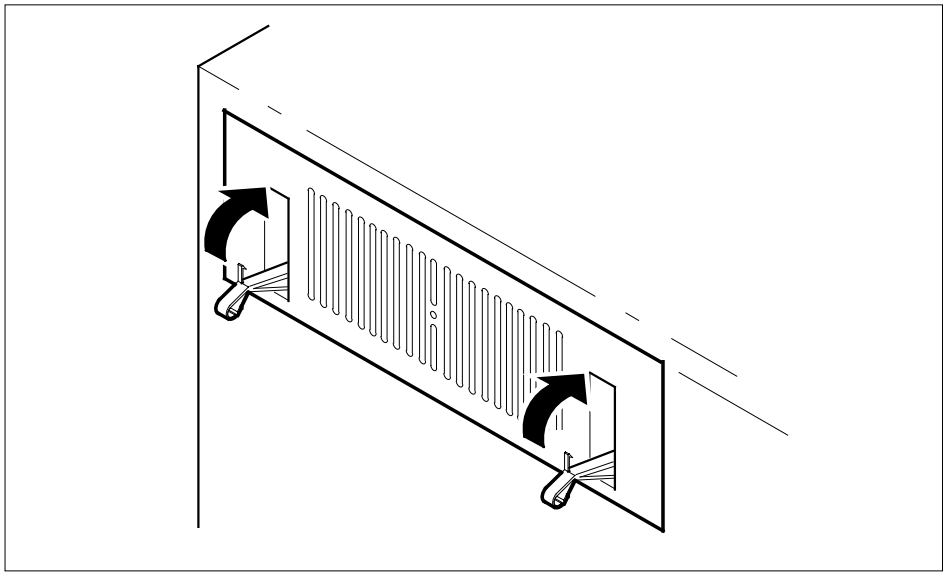

NT6X30
in an RSC-S (PCM-30) Model B LCME (continued)

23 Turn circuit breakers back ON. Ensure that ringing generator 0 is on circuit breaker 03-65-01. Ensure that ringing generator 1 is on circuit breaker 03-65-02.

If	Do
the circuit breaker remains switched and the LED light on the FSP goes out	step 24
the circuit breaker trips or the LED light on the FSP does not go out	step 38

24 The next action depends on your reason for performing this procedure.

If you were	Do
directed to this procedure from a maintenance procedure	step 25
not directed to this procedure from a maintenance procedure	step 26

25 Return to the maintenance procedure that sent you to this procedure and continue as directed.

At the MAP terminal

26 Post an LCME in the frame by typing

```
>POST LCME site frame_no lcme_no
```

and pressing the Enter key.

where

site
is the PM location (alphanumeric)

frame_no
is the frame number (00 to 511)

lcme_no
is the number of the LCME unit posted in step 3

27 Wait until there is no system-initiated maintenance on the unit.

28 Return the ManB unit to service by typing

```
>RTS UNIT unit_no
```

and pressing the Enter key.

where

unit_no
is the number (0 or 1) of the LCME unit

NT6X30
in an RSC-S (PCM-30) Model B LCME (continued)

29 Switch ringing generator activity to the new NT6X30 card by typing

>SWRG UNIT unit_no

and pressing the Enter key.

where

unit_no
is the PM unit number (0 or 1)

Example of a MAP display:

```
LCME RSC-S 14 0 InSv Links  OOS: Cside 0 Pside 0
Unit 0: InSv      /RG:1
Unit 1: InSv      /RG:1
                             11  11  11  RG: Pref 0 InSv
Drwr:  01  23  45  67  89  01   23  45      Stby 1 InSv
       ..  ..  ..  ..  ..  ..  ..  ..
```

If the SWRG command	Do
passed, and RG activity must be switched for the other unit	step 30
passed, and RG activity is acceptable for both PM units	step 31
failed	step 38

30 Repeat step 29 for the other PM unit.

31 Test the new RG by typing

>TST PM

and pressing the Enter key.

Example of a MAP response:

```
LCME RSC-S 14 0 Unit 1  InSvce Tests Initiated
LCME RSC-S 14 0 Unit 0  InSvce Tests Initiated
LCME RSC-S 14 0 Unit  1  Tst Passed
LCME RSC-S 14 0 Unit 0  Tst Passed
```

If the TST command	Do
passed	step 32
failed	step 35

32 Align RG activity to the preferred RG by typing

>SWRG UNIT unit_no

and pressing the Enter key.

NT6X30 in an RSC-S (PCM-30) Model B LCME (end)

where

unit_no
is the PM unit number (0 or 1)

Example of a MAP display:

```
LCME RSC-S 14 0 InSv Links  OOS: Cside 0 Pside 0
Unit 0: InSv      /RG:0
Unit 1: InSv      /RG:0

                              11  11  11  RG: Pref 0 InSv
Drwr:  01  23  45  67  89  01   23  45      Stby 1 InSv
       ..  ..  ..  ..  ..  ..  ..  ..
```

33 The next action depends on how many LCMEs are provisioned in the equipment frame.

If there	Do
one LCME provisioned in the frame	step 35
two LCMEs provisioned in the frame, and you have not switched RG activity for both LCMEs	step 34
two LCMEs provisioned in the frame, and you have switched RG activity for both LCMEs	step 35

34 Repeat steps 28 to 33 for the other LCME provisioned in the equipment frame.

35 Send any faulty cards for repair according to local procedure.

36 Record the date the card was replaced, the serial number of the card, and the symptoms that prompted replacement of the card. Go to step 39.

37 Consult office personnel to determine why the component is offline. Continue as directed by office personnel.

38 Obtain further assistance in replacing this card by contacting the personnel responsible for higher level of support.

39 You have successfully completed this procedure. Return to the maintenance procedure that directed you to this card replacement procedure and continue as directed.

NT6X36 in an IOPAC FSP

Application

Use this procedure to replace a card in the shelves or frames as identified in the following table.

PEC	Suffixes	Cardname	Shelf/frame name
NT6X36	AA	FSP alarm and control card	FSP/IOPAC

If you cannot identify the PEC, suffix, and shelf or frame for the card you want to replace, refer to the Index. The maintenance manual index contains a list of cards, shelves, and frames.

Common procedures

None

Action

This procedure contains a summary flowchart and a list of steps. Use the flowchart to review the procedure. Follow the steps to perform the procedure.

NT6X36
in an IOPAC FSP (continued)

Summary of Replacing an NT6X36 card in FSP

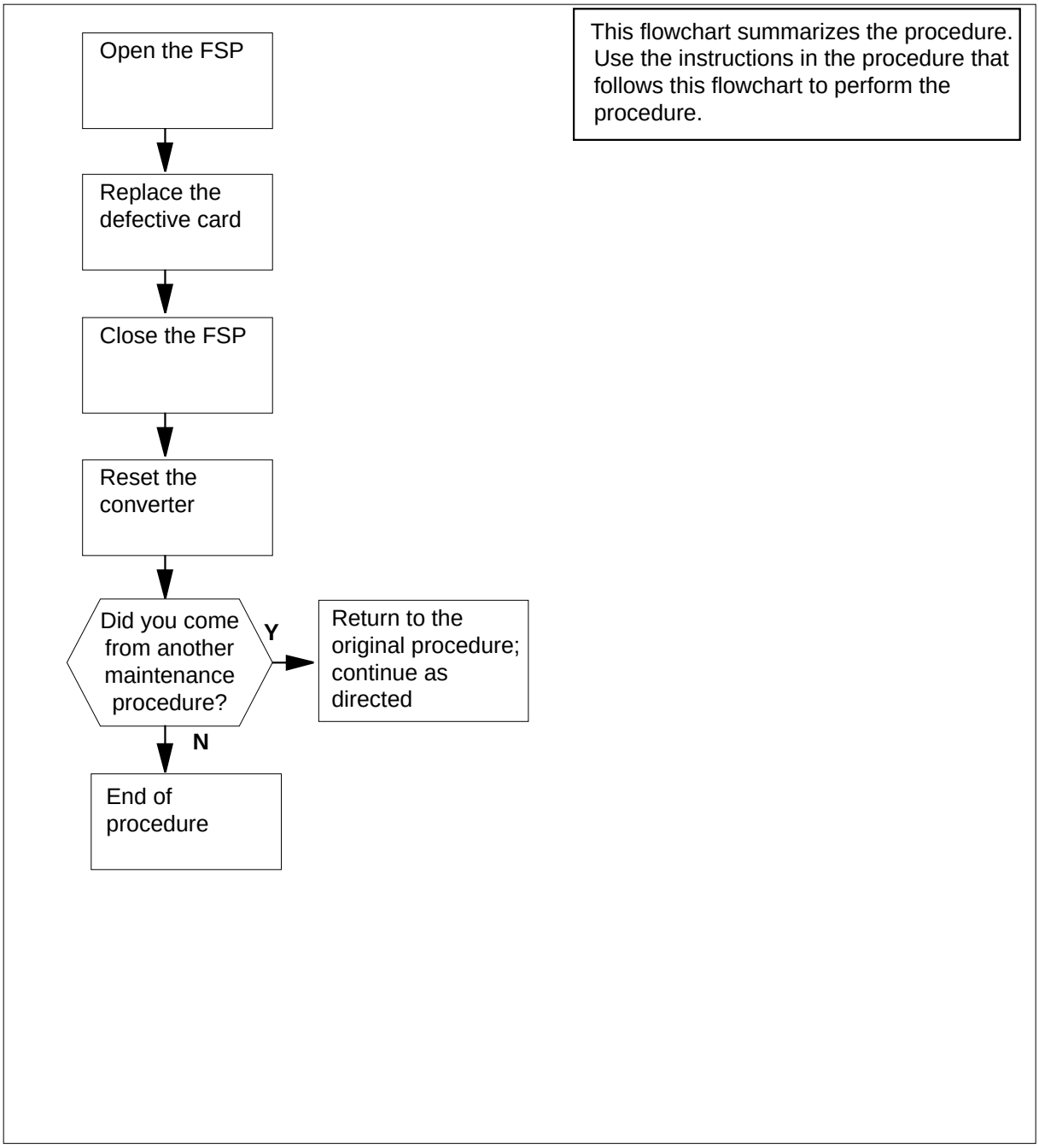

NT6X36
in an IOPAC FSP (continued)

Replacing an NT6X36 card in an FSP

At your current location

1 Obtain a replacement card. Make sure that the replacement card has the same product engineering code (PEC), and PEC suffix, as the removed card.

At the IOPAC cabinet

2 Unscrew the slotted nut on the left-hand side of the FSP.

3

DANGER
Risk of electrocution
Some of the terminals inside the FSP have an electrical potential of -48V dc. Remove jewelry before you replace a card in the FSP. Do not touch the terminals inside the FSP.

Open the FSP panel.

4 Remove the alarm and control card NT6X36.

NT6X36
in an IOPAC FSP (continued)

FSP Alarm and control cards

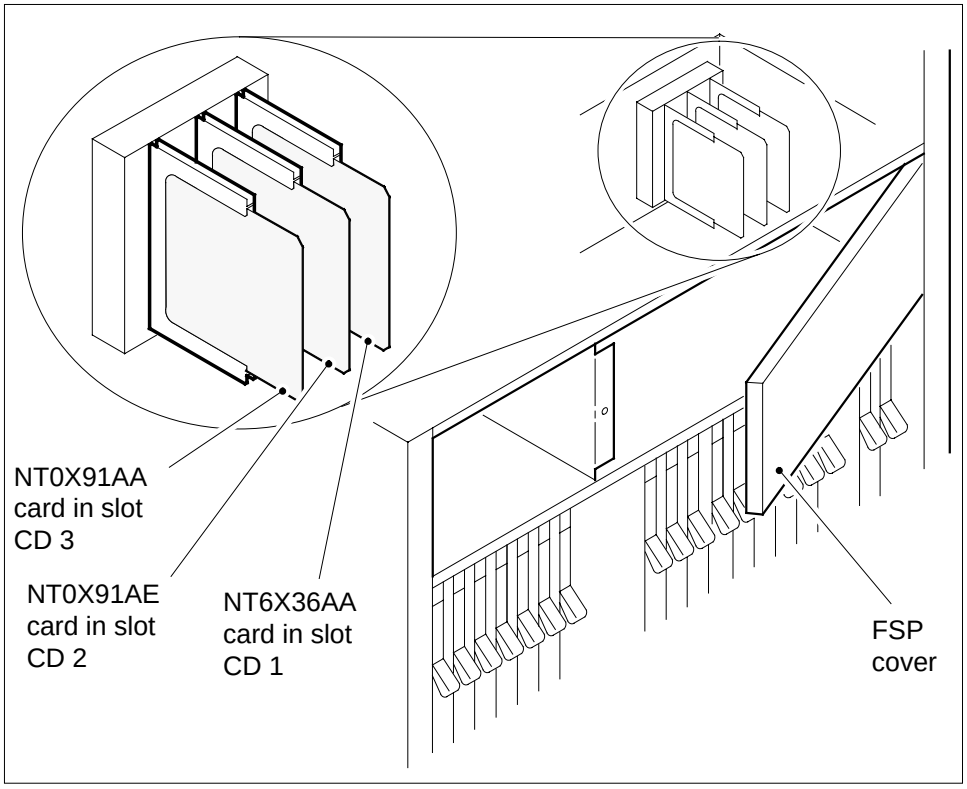

5

WARNING
Static electricity damage
Wear a wrist strap that connects to the wrist-strap grounding point of a frame supervisory panel (FSP) to handle circuit cards. The wrist strap protects the cards against static electricity damage.

Insert the replacement NT6X36 card.

6 Close the FSP panel.

7 Tighten the slotted nut on the FSP.

To reset the converter for each shelf associated with the card, proceed as follows.

NT6X36 in an IOPAC FSP (end)

At the HIE

8 Press the RESET button on the NT2X70 power converter card.

If the CONVERTER FAIL LED	Do
is lit	step 11
is not lit	step 9

9 The reason for this procedure will determine the next action.

If	Do
a maintenance procedure directs you to this procedure	step 10
a maintenance procedure does not direct you to this procedure	step 12

10 Return to the maintenance procedure that sends you to this procedure. Continue as directed.

11 For additional help, contact the next level of maintenance.

12 The procedure is complete.

NT6X36 in an OPM

Application

Use this procedure to replace the following card in an OPM.

PEC	Suffixes	Name
NT6X36	AA, AB	FSP alarm card
NT6X36	KA	FSP alarm and control card

Common procedures

None

Action

The following flowchart is a summary of the procedure. To replace the card, use the instructions in the procedure that follows the flowchart.

NT6X36
in an OPM (continued)

Summary of replacing an NT6X36 card in an OPM

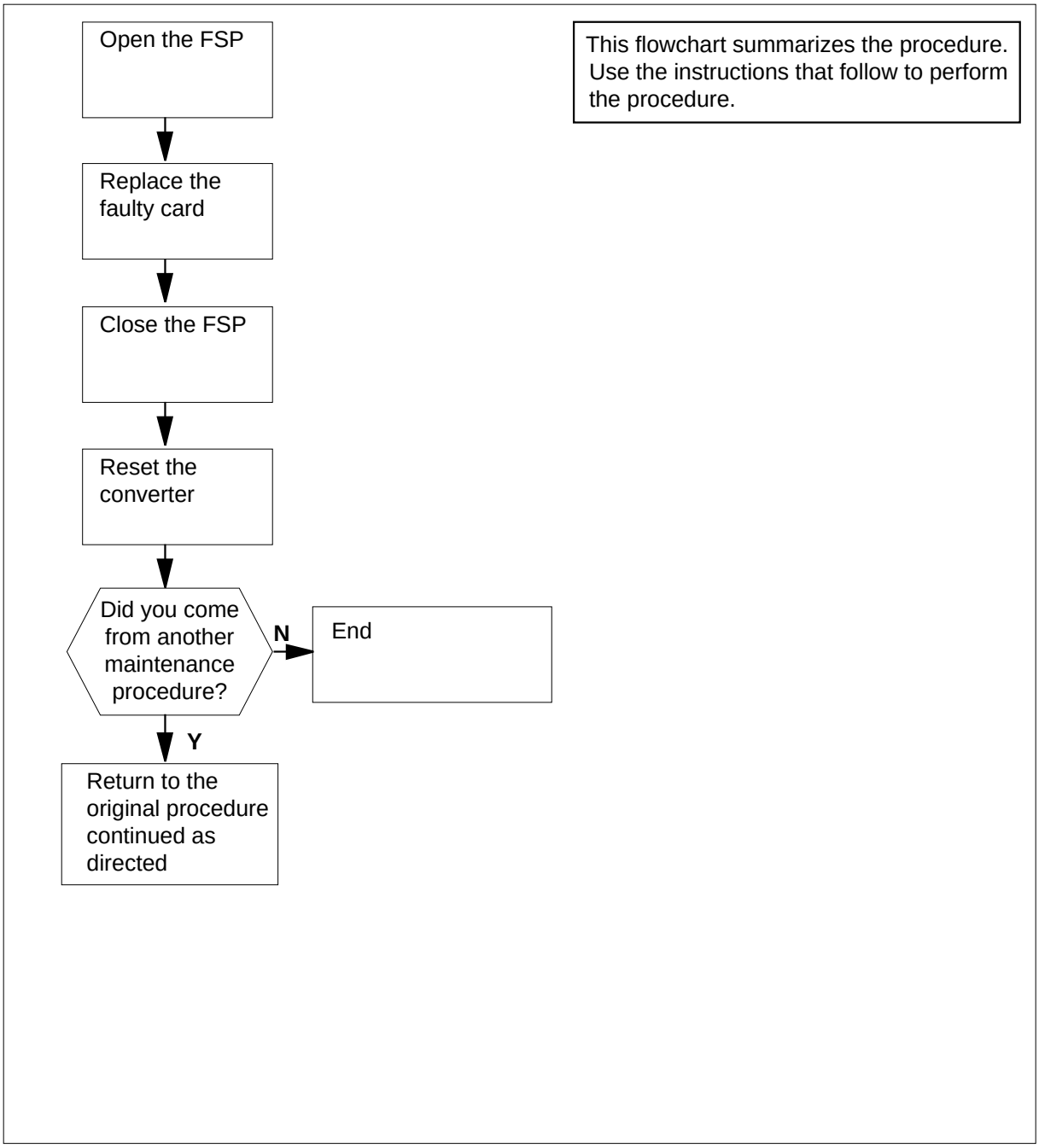

Replacing an NT6X36 card in an OPM

At your Current Location

1

WARNING
Static electricity damage
Wear a wrist strap connected to the wrist-strap grounding point of a frame supervisory panel (FSP) or a modular supervisory panel (MSP) while handling circuit cards. This protects the cards against damage caused by static electricity.

Obtain a replacement card. Ensure that the replacement card has the same product engineering code (PEC), including suffix, as the card being removed.

At the OPM cabinet

2

DANGER
Risk of electrocution
Some of the terminals inside the frame supervisory panel (FSP) have an electrical potential of -48V dc. Remove all jewelry before replacing a card in the FSP. Do not touch any terminal in the FSP.

Unscrew the slotted nut on the left-hand side of the FSP.

3 Open the FSP panel.

4 Remove the alarm and control card.

NT6X36
in an OPM (continued)

FSP Alarm and control cards

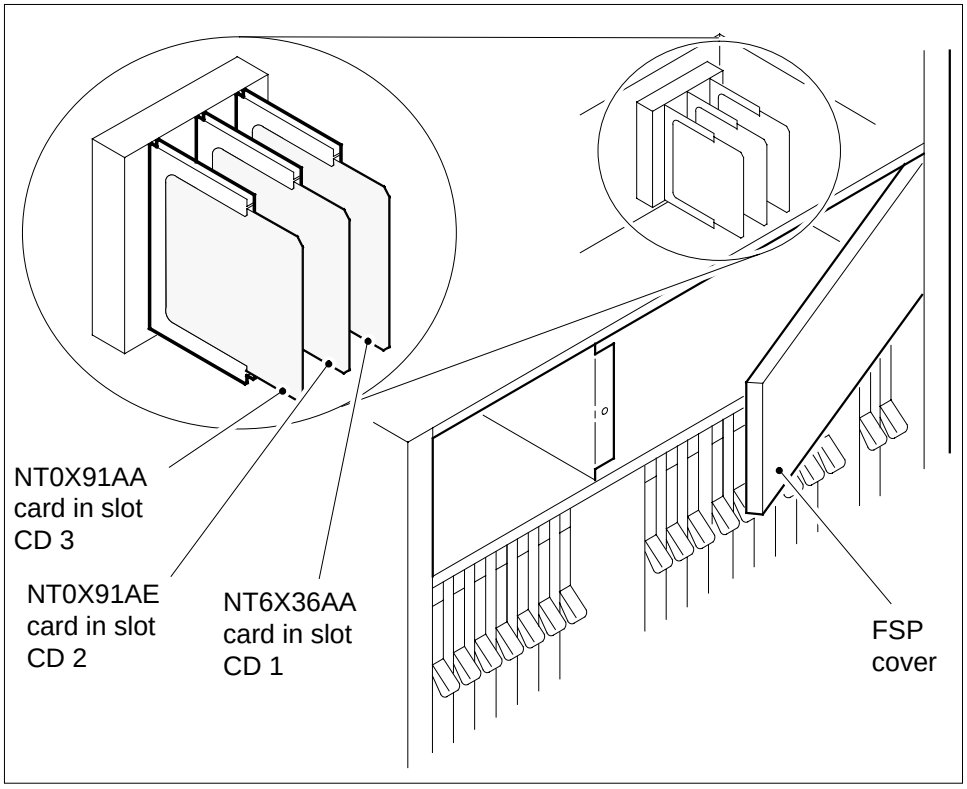

5 Insert the replacement alarm and control card.

6 Close the FSP panel.

7 Tighten the slotted nut on the FSP.

Proceed as follows to reset the converter in each shelf that is controlled by the alarm and control card you have just replaced.

8 Press the RESET button.

If the CONVERTER FAIL LED is	Do
lit	step 11
not lit	step 9

9 The next action depends on your reason for performing this procedure.

If you were	Do
directed to this procedure from a maintenance procedure	step 10

NT6X36
in an OPM (end)

If you were	Do
not directed to this procedure from a maintenance procedure	step 12

10 Return to the maintenance procedure that sent you to this procedure and continue as directed.

11 For further assistance, contact the personnel responsible for the next level of support.

12 You have completed this procedure.

NT6X36 in an RLCM-EDC FSP

Application

Use this procedure to replace a card in the shelves or frames as identified in the following table.

PEC	Suffixes	Cardname	Shelf/frame name
NT6X36	AA, AB	FSP alarm and control card	FSP/RLCC
NT6X36	AC	Fan alarm and control card	FSP/RLCC

If you cannot identify the PEC, suffix, and shelf or frame for the card you want to replace, refer to the Index. The maintenance manual index contains a list of cards, shelves, and frames.

Common procedures

There are no common procedures.

Action

This procedure contains a summary flowchart and a list of steps. Use the flowchart to review the procedure. Follow the steps to perform the procedure.

NT6X36
in an RLCM-EDC FSP (continued)

Summary of replacing an NT6X36 card in FSP

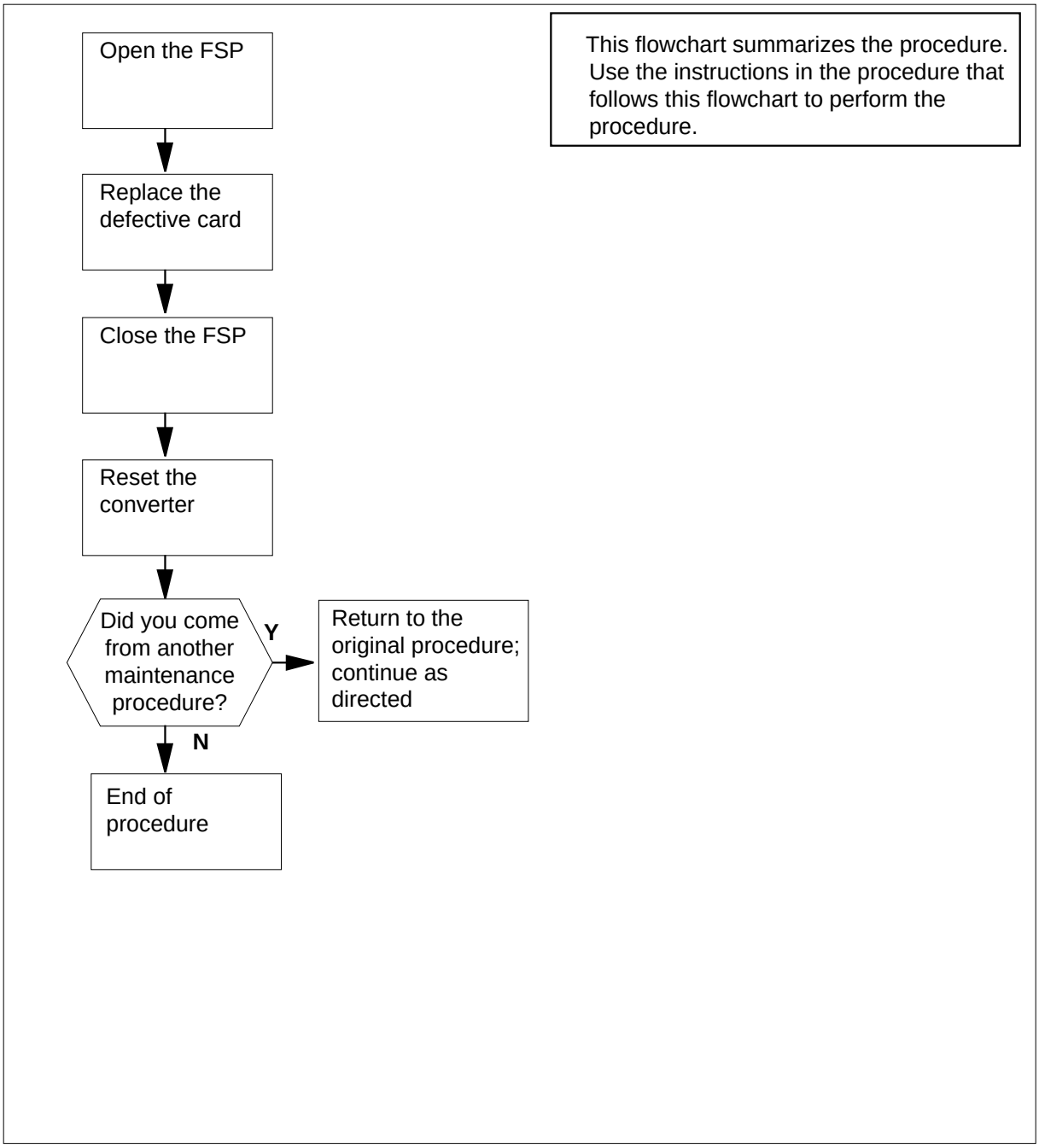

NT6X36
in an RLCM-EDC FSP (continued)

Replacing an NT6X36 card in an FSP

At your current location

1 Obtain a replacement card. Make sure that the replacement card has the same product engineering code (PEC), and PEC suffix, as the removed card.

At the RLCC cabinet

2 Unscrew the slotted nut on the left-hand side of the FSP.

3

DANGER
Risk of electrocution
Some of the terminals inside the FSP have an electrical potential of -48V dc. Remove jewelry before you replace a card in the FSP. Do not touch the terminals inside the FSP.

Open the FSP panel.

4 Remove the alarm and control or fan card NT6X36.

NT6X36
in an RLCM-EDC FSP (continued)

FSP Alarm and control cards

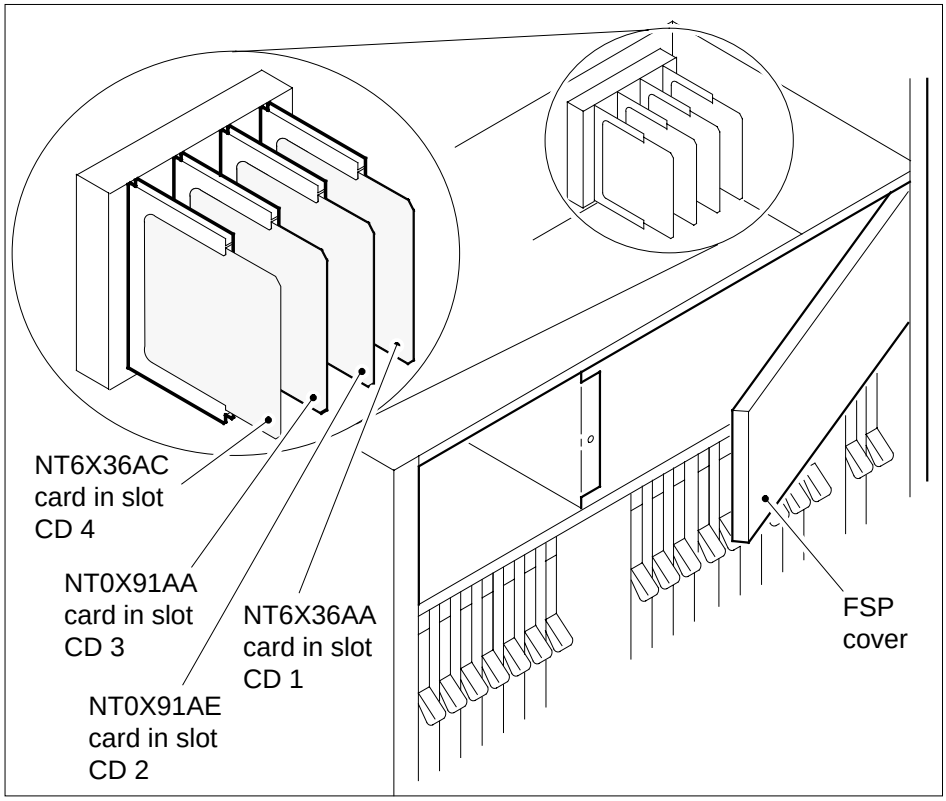

5

WARNING
Static electricity damage
Wear a wrist strap that connects to the wrist-strap grounding point of a frame supervisory panel (FSP) to handle circuit cards. The wrist strap protects the cards against static electricity damage.

Insert the replacement NT6X36 card.

6 Close the FSP panel.

7 Tighten the slotted nut on the FSP.

To reset the converter for each shelf associated with the card, proceed as follows.

NT6X36
in an RLCM-EDC FSP (end)

8 Press the RESET button.

If the CONVERTER FAIL LED	Do
is lit	step 11
is not lit	step 9

9 The reason for this procedure will determine the next action.

If	Do
maintenance procedure directs you to this procedure	step 10
maintenance procedure does not direct you to this procedure	step 12

10 Return to the maintenance procedure that sends you to this procedure. Continue as directed.

11 For additional help, contact the next level of maintenance.

12 The procedure is complete.

NT6X36 in an RLCM FSP

Application

Use this procedure to replace the following card in an RLCE.

PEC	Suffixes	Name
NT6X36	AA, AB	FSP alarm card
NT6X36	KA	FSP alarm and control card

Common procedures

None

Action

The following flowchart is a summary of the procedure. To replace the card, use the instructions in the procedure that follows the flowchart.

NT6X36
in an RLCM FSP (continued)

Summary of replacing an NT6X36 card in an RLCE

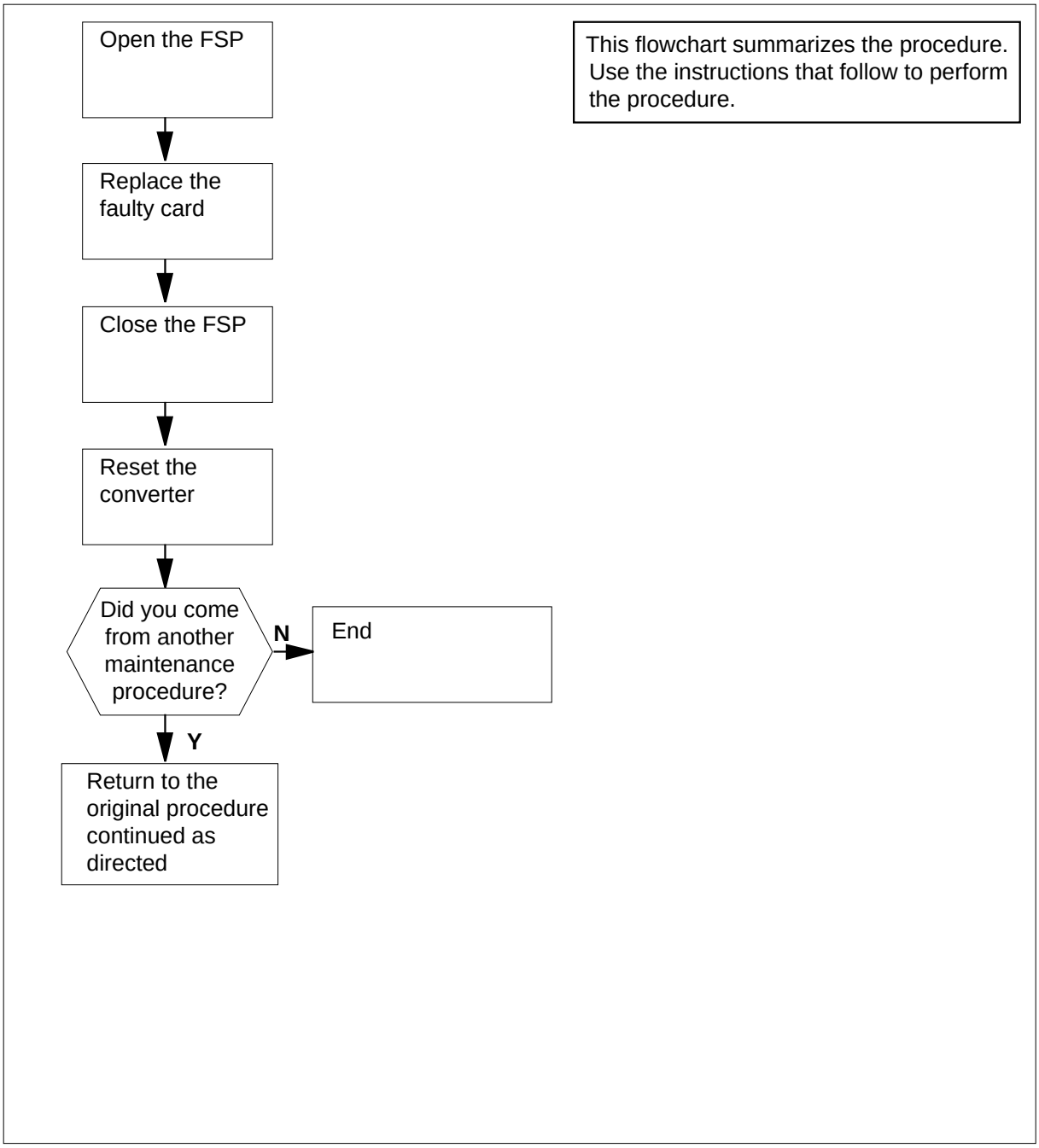

NT6X36
in an RLCM FSP (continued)

Replacing an NT6X36 card in an RLCE

At your current location

1

WARNING
Static electricity damage
Wear a wrist strap connected to the wrist-strap grounding point of a frame supervisory panel (FSP) or a modular supervisory panel (MSP) while handling circuit cards. This protects the cards against damage caused by static electricity.

Obtain a replacement card. Ensure that the replacement card has the same product engineering code (PEC), including suffix, as the card being removed.

At the RLCE frame

2

DANGER
Risk of electrocution
Some of the terminals inside the frame supervisory panel (FSP) have an electrical potential of -48V dc. Remove all jewelry before replacing a card in the FSP. Do not touch any terminal in the FSP.

Unscrew the slotted nut on the left-hand side of the FSP.

3 Open the FSP panel.

4 Remove the alarm and control card, NT6X36AA.

NT6X36
in an RLCM FSP (continued)

FSP Alarm and control cards

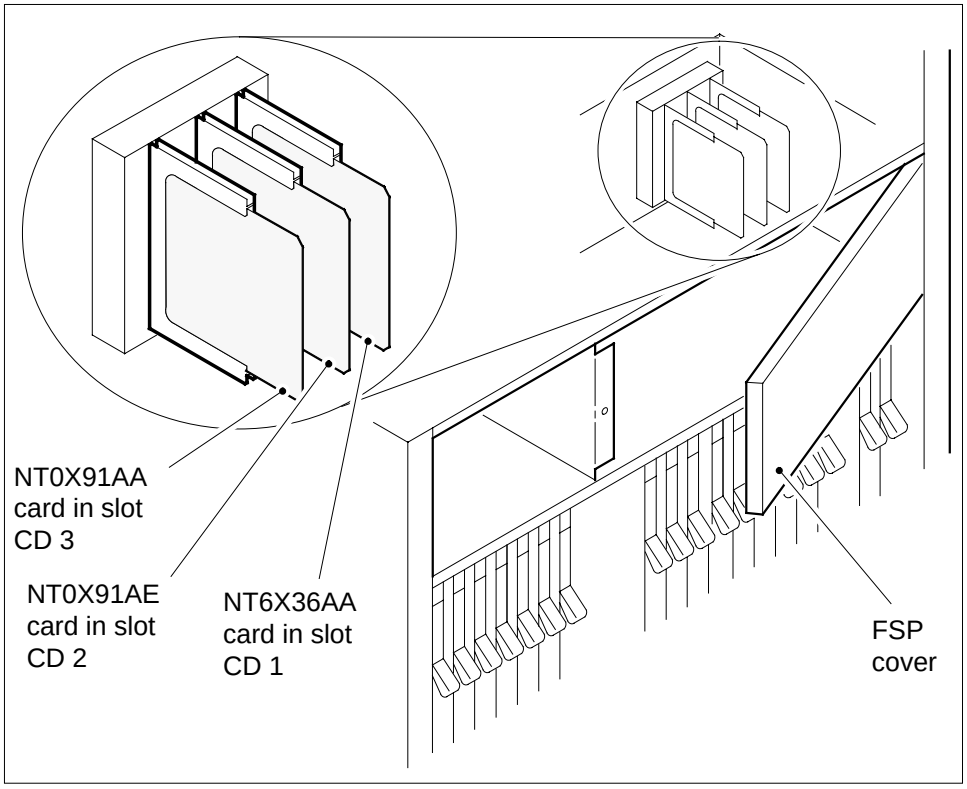

5 Insert the replacement alarm and control card.

6 Close the FSP panel.

7 Tighten the slotted nut on the FSP.

Proceed as follows to reset the converter in each shelf that is controlled by the alarm and control card you have just replaced.

8 Press the RESET button.

If the CONVERTER FAIL LED is	Do
lit	step 11
not lit	step 9

9 The next action depends on your reason for performing this procedure.

If you were	Do
directed to this procedure from a maintenance procedure	step 10

NT6X36
in an RLCM FSP (end)

If you were	Do
not directed to this procedure from a maintenance procedure	step 12

10 Return to the maintenance procedure that sent you to this procedure and continue as directed.

11 For further assistance, contact the personnel responsible for the next level of support.

12 You have completed this procedure.

NT6X36
in an RSC-S FSP for CRSC or CEXT

Application

Use this procedure to replace an NT6X36 card in a cabinetized Remote Switching Center (CRSC) or cabinetized extension shelf (CEXT) cabinet frame supervisory panel (FSP).

PEC	Suffixes	Name
NT6X36	AA, AB	Frame supervisory panel (FSP) alarm card

Action

The following flowchart is a summary of the procedure. To replace the card, use the instructions in the procedure that follows the flowchart.

NT6X36
in an RSC-S FSP for CRSC or CEXT (continued)

Summary of card replacement procedure for NT6X36 card in an RSC-S FSP for CRSC or CEXT

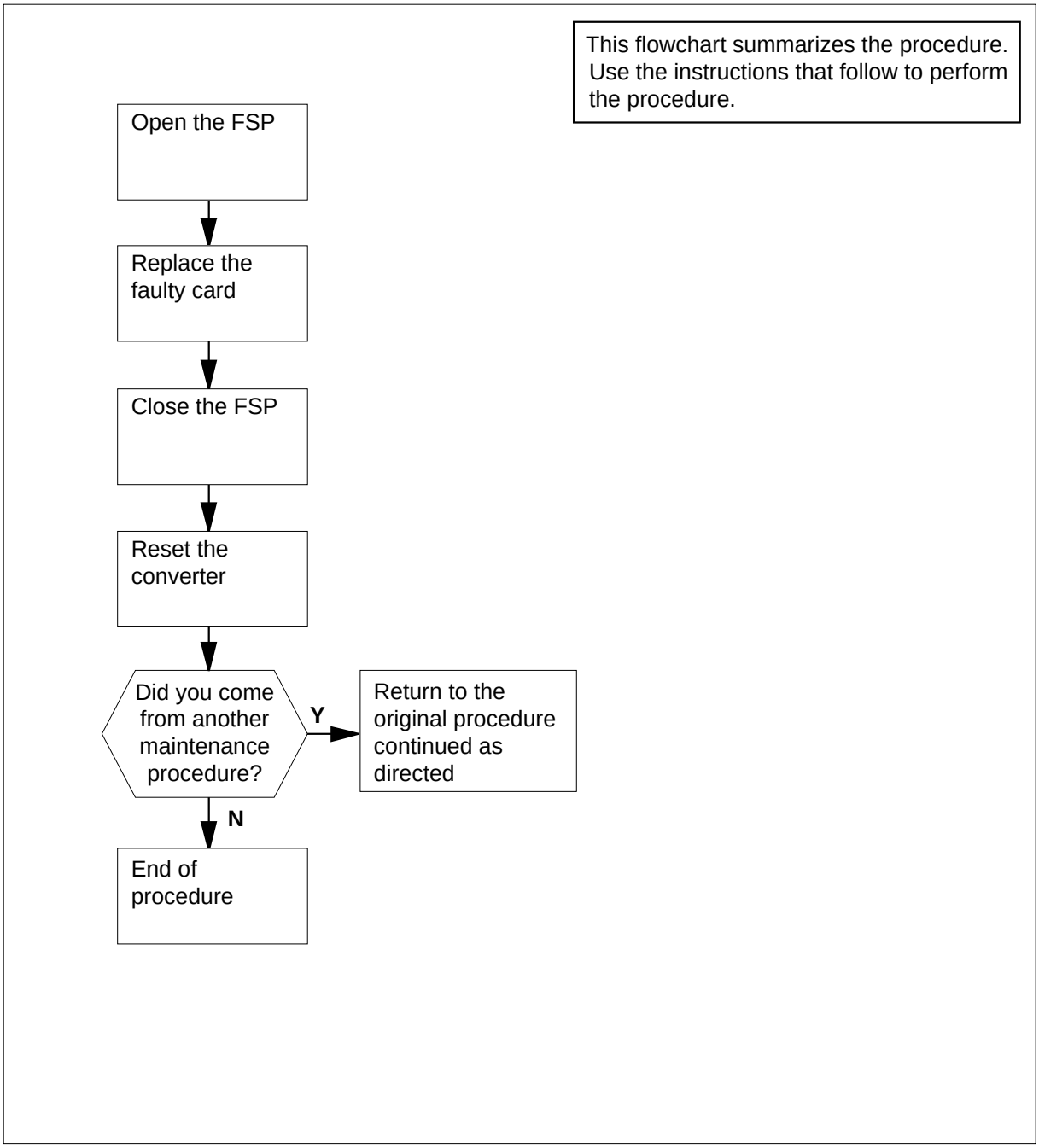

NT6X36 in an RSC-S FSP for CRSC or CEXT (continued)

Replacing an NT6X36 card in an RSC-S FSP for CRSC or CEXT

At your current location

1

WARNING
Static electricity damage
Wear a wrist strap connected to the wrist-strap grounding point of a frame supervisory panel (FSP) while handling circuit cards. This protects the cards against damage caused by static electricity.

Obtain a replacement card. Ensure the replacement card has the same product engineering code (PEC), including suffix, as the card being removed.

Note: CB3 and CB5 will be OFF and should be left OFF until instructed to turn them on in step 8.

At the CRSC or CEXT cabinet

2 The converter FAIL LED and FRAME FAIL lamp on the FSP will be ON. If an audible alarm sounds, return to the MAP terminal and silence the alarm by typing

```
>SIL
```

and pressing the Enter key.

3

DANGER
Risk of electrocution
Some of the terminals inside the frame supervisory panel (FSP) have an electrical potential of -48V dc. Remove all jewelry before replacing a card in the FSP. Do not touch any terminal in the FSP.

Unscrew the slotted nut on the left-hand side of the FSP.

NT6X36
in an RSC-S FSP for CRSC or CEXT (continued)

Frame supervisory panel

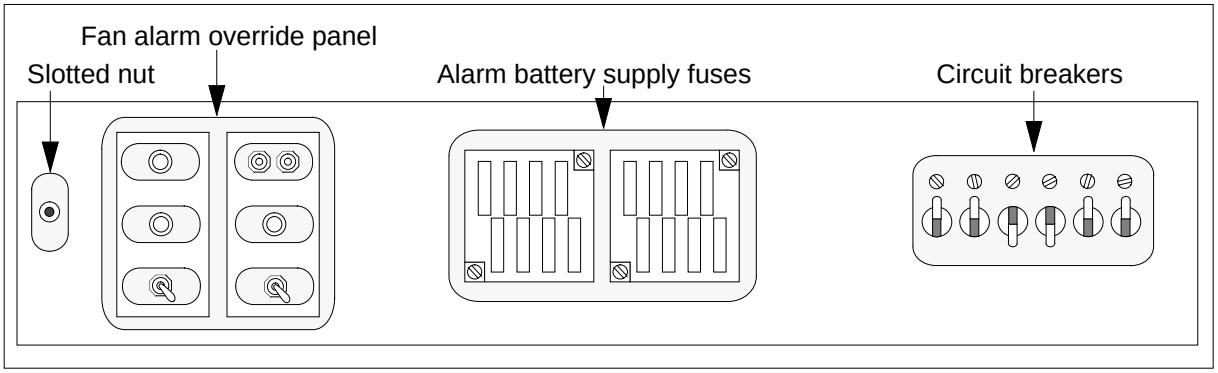

4 Open the FSP panel and remove the alarm card.

Frame supervisory panel alarm and control cards

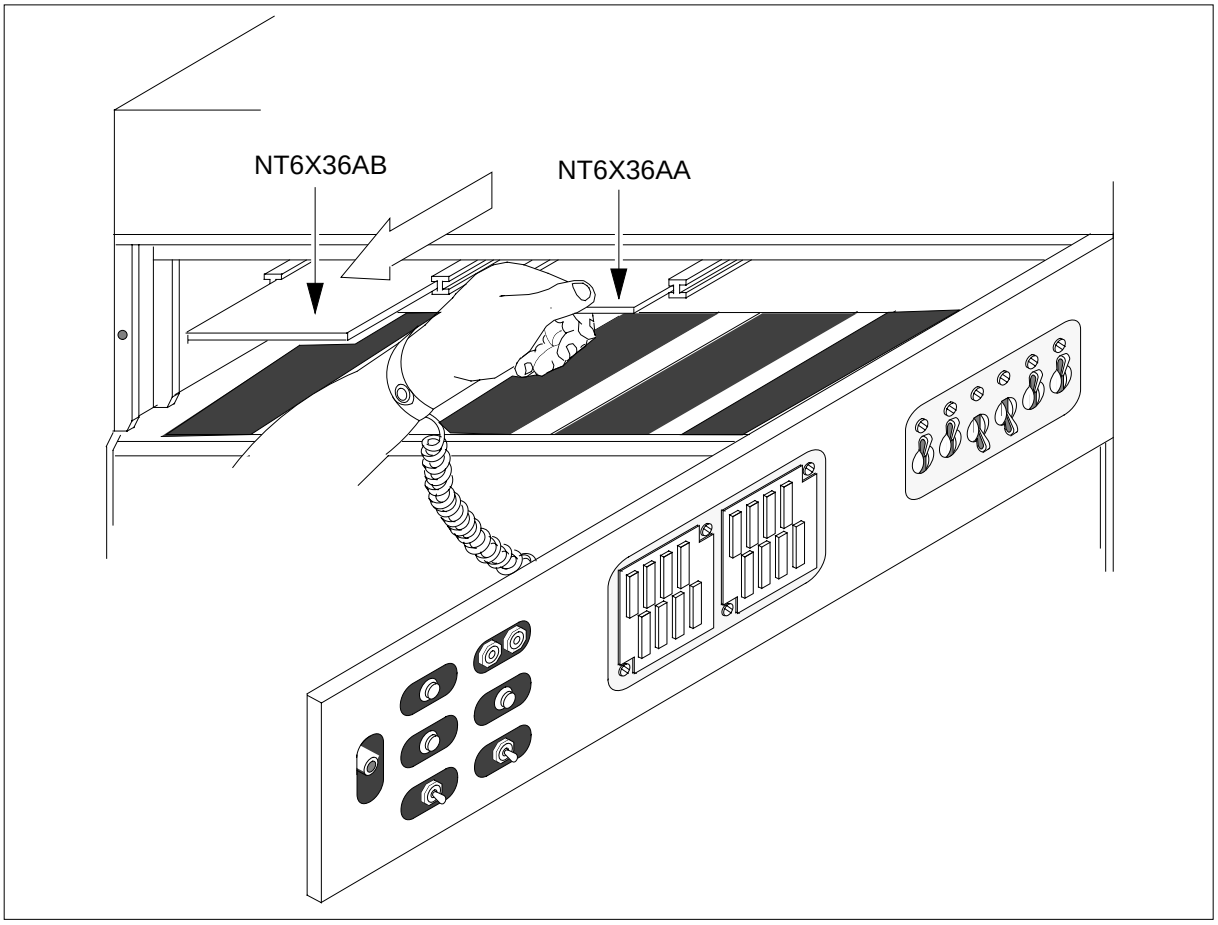

5 Insert the replacement alarm card.

NT6X36
in an RSC-S FSP for CRSC or CEXT (continued)

6 Close the FSP panel.

7 Tighten the slotted nut on the FSP.

Proceed as follows to reset the converter in each shelf controlled by the alarm and control card you have just replaced.

At the CRSC or CEXT cabinet

8 Move the ON/OFF/RESET switch on the NTBX72 card to RESET. While still holding the switch at RESET, move the circuit breakers (CB) for the ringing generator (CB3) and the LCME unit (CB5) to ON. After moving CB3 and CB5 to the ON position, release the RESET switch.

If the CONVERTER FAIL LED is	Do
lit and the NT6X36 PEC suffix is AA	step 27
lit and the NT6X36 PEC suffix is AB	step 27
not lit and the NT6X36 PEC suffix is AA	step 9
not lit and the NT6X36 PEC suffix is AB	step 24

At the MAP terminal

9 Access the PM level and post the LCME by typing

```
>MAPCI;MTC;PM;POST LCME site_name cabinet_no lcme_no
```

and pressing the Enter key.

where

site_name
is the name of the site where the LCME is located

cabinet_no
is the number of the cabinet where the LCME is located

lcme_no
is the number of the LCME with the faulty card

10 Monitor the MAP display for system recovery.

Example of MAP display

```
 CM    MS    IOD    Net    PM    CCS    Lns    Trks    Ext    Appl
  .     .      .     .   1LCME     .      .       .      .       .


LCME             SysB     ManB     OffL     CBsy    ISTb     InSv
 0 Quit     PM      1        0        2        0       2        12
 2 Post_    LCME    0        0        2        0       2         9
 3 ListSet
 4 SwRG    LCME   RSC-S 14 1 ISTb  Links_OOS:  CSide  0  PSide  0
 5 Trnsl_   Unit0:   SysB                /RG: 1  System Recovery
 6 Tst_     Unit1:   ISTb    Takeover     /RG: 1
 7 Bsy_                                 11  11  11   RG:Pref 1 ISTb
 8 RTS_   Drwr:  01  23  45  67  89  01  23  45      Stby 0 ISTb
 9 OffL          ..  ..  ..  ..  ..  ..  ..  ..
10 LoadPM_
11 Disp_
12 Next
13
14 QueryPM
15
16
17
18
```

If the system	Do
recovers	step 11
does not recover	step 28

At the MAP terminal

11 Manually busy the LCME unit by typing

`>BYS UNIT lcme_unit_no`

and pressing the Enter key.

where

lcme_unit_no
is the SysB LCME unit identified in step 9

12 Return the LCME unit to service by typing

`>RTS UNIT lcme_unit_no`

and pressing the Enter key.

where

NT6X36
in an RSC-S FSP for CRSC or CEXT (continued)

lcme_unit_no
is the number of the LCME unit busied in step 11

If the RTS	Do
passed	step 28
failed	step 13

13 Determine the loadnames of each LCME unit by typing

>QUERYPM

and pressing the Enter key.

Example MAP response

```
PM Type: LCME  INT. NO.: 13  STATUS INDEX: 7  NODE_NO 154
Memory Size – Unit 0: 256K, Unit 1: 256K
Loadnames: LCMINV – LCME031D, Unit1: LCME031D
LCME R113 001 is included in the list of LCM types
   scheduled for a REX test
Last RES test was TUE. 1995/02/28 at 02:33:43; PASSED.
Node Status: {OK, FALSE}
Unit 0 Status; {MAN_BUSY, FALSE}
Unit 1 Status: {OK, FALSE}
 Site  Flr RPos  Bay_id  Shf  Description  Slot  EqPEC
 R113   01 AA00  LCEI 00  33  LCME 00            BX30AB
Services: ISDN Equipped
```

(*LCME loadname*)

14 Access the disk utility by typing

>DISKUT

and pressing the Enter key.

15 List the file information for the LCME loadfile volume by typing

>LV CM;LF loadfile_volume

and pressing the Enter key.

where

loadfile_volume
is the loadfile volume name

Example MAP display

```
>LV CM;LF S01DPMLOADS
Volumes found on the node CM:
NAME            TYPE     TOTAL    FREE TOTAL  OPEN  ITOC      LARGEST
                        BLOCKS  BLOCKS FILES FILES FILES FREE SEGMENT
S00DSTAFFIMG     STD    409589   89377     4     0     2        89377
S00DPMLOADS      STD    153589   57512    35     0     0        27528
S00IMAGE         STD    131061  131061     0     0     0       131061
.
.
S01DPMLOADS      STD    153589  37846     29     0     0         6686
.
.
S01DIMAGE        STD     92095  65294      4     0     0        65294
File information for volume S01DPMLOADS:
{Note:  1 BLOCK = 512 BYTES }
  LAST FILE O R I O        FILE       NUM OF   MAX     FILE NAME
MODIFY CODE R E T P        SIZE     RECORDS    REC
  DATE      G C O E          IN          IN    LEN
              C N      BLOCKS         FILE
940630    0 I F            5334        2667   1020  LRC36CJ
941013    0 O F            4570        2285   1024  NRC03BX
.
.
940921    0 O F             173        1610     55  LCME031D
.
.
941010    0 O F            1452         726   1024  DCH03A
```

16 Quit the disk utility by typing

>QUIT

and pressing the Enter key.

17 Load the LCME unit by typing

>LOADPM UNIT lcme_unit_no CC

and pressing the Enter key.

where

lcme_unit_no
is the number of the LCME manually busied in step 11

If the load	Do
passed	step 18

NT6X36
in an RSC-S FSP for CRSC or CEXT (continued)

If the load	Do
failed	step 27

18 Return the LCME unit to service by typing

>RTS UNIT lcme_unit_no

and pressing the Enter key.

where

lcme_unit_no
is the number of the LCME unit loaded in step 17

If the RTS	Do
passed	step 19
failed	step 27

19 Post the RMM by typing

>POST RMM rmm_no

and pressing the Enter key.

where

rmm_no
is the number of the RMM where the card is to be removed

Example of a MAP display:

```
CM    MS    IOD    Net     PM    CCS    LNS     Trks     Ext    APPL
 .     .     .      .     4SysB    .      .       .       .       .

RMM                 SysB     ManB     OffL     CBsy     ISTb     InSv
 0 Quit     PM        4        0        10       3        3       130
 2 Post_    RMM       1        0         1       0        0        2
 3
 4          RMM  5  SysB
 5 Trnsl
 6 Tst
 7 Bsy
 8 RTS
 9 OffL
10 LoadPM
11 Disp_
12 Next
13
14 QueryPM
15
16
17
18
```

NT6X36
in an RSC-S FSP for CRSC or CEXT (continued)

20 Determine the state of the RMM.

If the state of the RMM is	Do
SysB	step 21
InSv	step 28

21 Busy the RMM by typing

>BSY

and pressing the Enter key.

Example of a MAP display:

```
CM    MS     IOD    Net     PM    CCS    LNS     Trks    Ext    APPL
 .     .      .      .     4SysB    .      .       .      .      .

RMM                 SysB     ManB     OffL     CBsy     ISTb     InSv
 0 Quit     PM        4        0       10       3        3       130
 2 Post_    RMM       0        1        1       0        0        2
 3
 4          RMM  5  ManB
 5 Trnsl
 6 Tst
 7 Bsy
 8 RTS
 9 OffL
10 LoadPM
11 Disp_
12 Next
13
14 QueryPM
15
16
17
18
```

22 Load the RMM by typing

>LOAD

and pressing the Enter key.

If the load	Do
passed	step 23
failed	step 27

23 Return the RMM to service by typing

>RTS

NT6X36 in an RSC-S FSP for CRSC or CEXT (end)

and pressing the Enter key.

If the RTS command	Do
passed	step 24
failed	step 27

24 The next action depends on your reason for performing this procedure.

If you were	Do
directed to this procedure from a maintenance procedure	step 25
directed to this procedure from an alarm clearing procedure	step 26

25 Return to the maintenance procedure that sent you to this procedure and continue as directed.

26 Return to the alarm clearing procedure that sent you to this procedure and continue as directed.

27 For further assistance, contact the personnel responsible for the next level of support.

28 You have successfully completed this procedure.

Index

C

Card
replacing Vol. 3, 9-166
card removal and placement
card replacement common procedures Vol. 3, 9-19
card replacement common procedures
Activating CCS7 links Vol. 3, 9-2
Activity switch with memory match Vol. 3, 9-11
card removal and placement Vol. 3, 9-19
Correcting a load mismatch Vol. 3, 9-32
Deactivating CCS7 links Vol. 3, 9-47
Failure to switch clock mastership Vol. 3, 9-55
Loading a PM Vol. 3, 9-64
Manually busying LIM-to-MS DS30 links Vol. 2, 6-26, Vol. 3, 9-76
Manually busying Series II PM C-side links Vol. 3, 9-82, Vol. 3, 9-95
Manually busying SMA C-side links Vol. 3, 9-89
Moving an XSG to a spare XLIU Vol. 3, 9-137
placing MP in service (integrated) Vol. 3, 5-57
placing MP in service (standalone) Vol. 3, 9-145
removing MP from service (integrated) Vol. 3, 5-62
removing MP from service (standalone) Vol. 3, 9-150
Replacing a card Vol. 3, 9-160
Replacing a line card Vol. 3, 9-172
Reseating cards in equipment shelves Vol. 3, 9-179
Returning LIM-to-MS DS30 links to service Vol. 2, 6-33, Vol. 3, 9-188
Switching the clock source Vol. 3, 9-193
TMS shelf layouts Vol. 3, 4-2
Unseating cards in equipment shelves Vol. 3, 9-200
Verifying load compatibility of SuperNode cards Vol. 3, 9-204
Card replacement procedures
NT2X70 Vol. 4, 1-490, Vol. 4, 1-498
NT6X17 Vol. 4, 1-739
NT6X18 Vol. 4, 1-783
NT6X19 Vol. 4, 1-823
NT6X20 Vol. 4, 1-863
NT6X21 Vol. 4, 1-920
NT6X40 Vol. 5, 1-2, Vol. 5, 1-14, Vol. 5, 1-26
NT6X41 Vol. 5, 1-64, Vol. 5, 1-71
NT6X42 Vol. 5, 1-101, Vol. 5, 1-107
NT6X44 Vol. 5, 1-138
NT6X50 Vol. 5, 1-259, Vol. 5, 1-275
NT6X53 Vol. 5, 1-487
NT6X54 Vol. 5, 1-556
NT6X69 Vol. 5, 1-648, Vol. 5, 1-654
NT6X71 Vol. 5, 1-721
NT6X76 Vol. 5, 1-869
NT6X78 Vol. 5, 1-919, Vol. 5, 1-925, Vol. 5, 1-932
NT6X80 Vol. 5, 1-951, Vol. 5, 1-957
NT6X92 Vol. 6, 1-112, Vol. 6, 1-118, Vol. 6, 1-125
NT6X99 Vol. 6, 1-186
NTAX74 Vol. 6, 1-303, Vol. 6, 1-315, Vol. 6, 1-327, Vol. 6, 1-337, Vol. 6, 1-347
NTAX78 Vol. 6, 1-355, Vol. 6, 1-362
NTBX01 Vol. 6, 1-417, Vol. 6, 1-423, Vol. 6, 1-430

NTBX02 Vol. 6, 1-508, Vol. 6, 1-515, Vol. 6, 1-523
NTBX27 Vol. 6, 1-586
NTMX71 Vol. 6, 1-916, Vol. 6, 1-924
NTMX72 Vol. 6, 1-1002
NTMX73 Vol. 7, 1-54
NTMX75 Vol. 7, 1-162
NTMX76 Vol. 7, 1-214
NTMX79 Vol. 7, 1-390
NTMX81 Vol. 7, 1-435, Vol. 7, 1-451
NTRX41 Vol. 7, 1-655
in CDSN (cabinetized dual shelf network) Vol. 1, 8-197
in CDTO (cabinetized digital trunk controller offshore) Vol. 1, 8-197
in CIOE (cabinetized input/output equipment) Vol. 1, 8-197
in CIPE (cabinetized international peripheral equipment) Vol. 1, 8-197
in CLGO (cabinetized line group controller offshore) Vol. 1, 8-197
in CMIS (cabinetized miscellaneous equipment) Vol. 1, 8-197
in CMS7 (cabinetized message switch 7) Vol. 1, 8-197
in CTME (cabinetized trunk module equipment) Vol. 1, 8-197
NTRX42 Vol. 7, 1-766
NTRX43 Vol. 7, 1-816
NTRX54 Vol. 7, 1-889
NTTR46 Vol. 7, 1-902
NTTR47 Vol. 7, 1-908
NTTR60 Vol. 7, 1-914
NTTR66 Vol. 7, 1-921
NTTR67 Vol. 7, 1-927
NTTR70 Vol. 7, 1-934
NTTR71 Vol. 7, 1-941
NTTR72 Vol. 7, 1-946
NTTR73 Vol. 7, 1-952
NTTR74 Vol. 7, 1-956
NTTR75 Vol. 7, 1-962
NTTR76 Vol. 7, 1-970
NTTR77 Vol. 7, 1-979
NTTR87 Vol. 7, 1-986
card replacement procedures
EDRAM Vol. 3, 6-84
NT0X10 Vol. 4, 1-2, Vol. 4, 1-6, Vol. 4, 1-14, Vol. 4, 1-18, Vol. 4, 1-25, Vol. 4, 1-31, Vol. 4, 1-37, Vol. 4, 1-43
in an RMM Vol. 4, 1-10
in MTM, STM Vol. 3, 6-93
in OAU Vol. 2, 10-7
NT0X36
in an international cabinet auxiliary module Vol. 1, 8-74
in CIOE with DDU, DPP, IOC, MTD, or ROS Vol. 1, 8-8
in IOE frame Vol. 1, 8-53
NT0X67
in IOC Vol. 1, 9-97
NT0X70
in MTM, TM Vol. 3, 6-27
in OAU Vol. 2, 10-7
NT0X91 Vol. 4, 1-61
in CPCE provisioned for DTC, DTCI, IDTC, PDTC Vol. 1, 8-98
in CPCE provisioned for ILGC, LGC, LGCI, PLGC Vol. 1, 8-98
in CPCE provisioned for ILTC, LTC, LTCI, PLTC Vol. 1, 8-98
in CTME with ISM, MTM, OAU, STM, or TM Vol. 1, 8-29
in DCE Vol. 1, 8-112
in LME Vol. 1, 8-123
in MS6E Vol. 1, 8-133
in MS7E Vol. 1, 8-147
in NT0X48 single-bay network Vol. 1, 8-159
in NT5X13 combined single-bay network Vol. 1, 8-159
in NT8X11 dual shelf network Vol. 1, 8-159
in ST6E, ST7E Vol. 1, 8-147
in TME with ISM, MTM, OAU, STM, and TM Vol. 1, 8-172
NT0X91AA Vol. 4, 1-49, Vol. 4, 1-90
NT0X91AE Vol. 4, 1-49, Vol. 4, 1-96, Vol. 4, 1-105
NT1X00
in ISM, MTM, STM Vol. 3, 6-93
NT1X31
in MTM, STM Vol. 3, 6-93
NT1X54
in ISM, TM Vol. 3, 6-93
NT1X55
in IOC Vol. 1, 9-10

NT1X62
in IOC Vol. 1, 9-97
NT1X67
in IOC Vol. 1, 9-21
NT1X68
in IOC Vol. 1, 9-10
NT1X75
in MTM with DRAM, STM with DRAM Vol. 3, 6-27
NT1X76
in DRAM Vol. 3, 6-93
in MTM, STM Vol. 3, 6-93
NT1X76 in MTM Vol. 2, 5-2
NT1X77
in DRAM Vol. 3, 6-93
in MTM, STM Vol. 3, 6-93
NT1X78
in dual DDU shelf Vol. 1, 9-28
in single DDU shelf Vol. 1, 9-28
in SuperNode ROS Vol. 3, 1-5
in SuperNode SE ROS Vol. 3, 1-5
NT1X79
in DRAM Vol. 3, 6-93
in MTM, STM Vol. 3, 6-93
NT1X80
in ISM, MTM, STM Vol. 3, 6-84
NT1X81
in ISM, MTM, STM Vol. 3, 6-84
NT1X89
in IOC Vol. 1, 9-37
NT1X90
in ISM, MTM, STM Vol. 3, 6-93
NT2X01
in ISM, MTM, STM Vol. 3, 6-93
NT2X02
in LM line drawer Vol. 2, 2-16
NT2X03
in LM line drawer Vol. 2, 2-16
NT2X05
in LM controller Vol. 2, 2-30
in remote line controller Vol. 2, 11-22
in RLM Vol. 2, 11-22
NT2X06 Vol. 4, 1-114, Vol. 4, 1-121, Vol. 4, 1-129, Vol. 4, 1-136, Vol. 4, 1-144, Vol. 4, 1-153, Vol. 4, 1-162
in DCM, DES Vol. 1, 4-47
in MTM, TM Vol. 3, 6-69
in NT0X48 single-bay network Vol. 2, 9-40
in OAU Vol. 2, 10-14
NT2X07
in DCM, DES Vol. 1, 4-47
in NT0X48 single-bay network Vol. 2, 9-40
NT2X09 Vol. 4, 1-171, Vol. 4, 1-178, Vol. 4, 1-186, Vol. 4, 1-194, Vol. 4, 1-202, Vol. 4, 1-211, Vol. 4, 1-220
in DRAM Vol. 3, 6-69
in EDRAM Vol. 3, 6-69
in MTM, TM Vol. 3, 6-69
in OAU Vol. 2, 10-14
NT2X10 Vol. 4, 1-229, Vol. 4, 1-233, Vol. 4, 1-237, Vol. 4, 1-244, Vol. 4, 1-251, Vol. 4, 1-258
in ISM, MTM, STM Vol. 3, 6-93
NT2X11 Vol. 4, 1-265, Vol. 4, 1-270, Vol. 4, 1-278, Vol. 4, 1-282, Vol. 4, 1-289, Vol. 4, 1-298, Vol. 4, 1-307
in an RMM Vol. 4, 1-274
in ISM, MTM, STM Vol. 3, 6-93
NT2X16
in LM line drawer Vol. 2, 2-16
NT2X20
in LM line drawer Vol. 2, 2-24, Vol. 2, 11-16
NT2X21
in LM controller Vol. 2, 2-9
in remote line controller Vol. 2, 11-9
in RLM Vol. 2, 11-9
NT2X22
in LM controller Vol. 2, 2-9
in remote line controller Vol. 2, 11-9
in RLM Vol. 2, 11-9
NT2X23
in LM controller Vol. 2, 2-9
in remote line controller Vol. 2, 11-9
in RLM Vol. 2, 11-9
NT2X24
in LM controller Vol. 2, 2-9
in remote line controller Vol. 2, 11-9
in RLM Vol. 2, 11-9
NT2X25
in LM controller Vol. 2, 2-9
in remote line controller Vol. 2, 11-9
in RLM Vol. 2, 11-9
NT2X26
in LM controller Vol. 2, 2-9
in remote line controller Vol. 2, 11-9
in RLM Vol. 2, 11-9
NT2X27
in LM controller Vol. 2, 2-9

in remote line controller Vol. 2, 11-9
in RLM Vol. 2, 11-9
NT2X32
in DCM, DES Vol. 1, 4-8
NT2X33
in DCM, DES Vol. 1, 4-8
in LM controller Vol. 2, 2-9
NT2X34
in DCM, DES Vol. 1, 4-8
in LM controller Vol. 2, 2-9
NT2X35
in DCM Vol. 1, 4-13
NT2X36
in DCM Vol. 1, 4-27
in LM controller Vol. 2, 2-9
NT2X37
in DCM, DES Vol. 1, 4-8
NT2X38
in DCM, DES Vol. 1, 4-8
NT2X41
in OAU Vol. 2, 10-7
NT2X42
in OAU Vol. 2, 10-7
NT2X43
in ISM, MTM, STM Vol. 3, 6-93
in OAU Vol. 2, 10-7
NT2X45
in MTM, TM Vol. 3, 6-27
in OAU Vol. 2, 10-7
NT2X47
in ISM, MTM, STM Vol. 3, 6-93
NT2X48 Vol. 4, 1-316, Vol. 4, 1-321, Vol. 4, 1-326
in ISM, MTM, STM Vol. 3, 6-93
NT2X50
in MTM, STM Vol. 3, 6-93
NT2X53
in MTM, TM Vol. 3, 6-27
in OAU Vol. 2, 10-7
NT2X55 Vol. 4, 1-331
in ISM, MTM, STM Vol. 3, 6-93
NT2X56
in ISM, MTM, STM Vol. 3, 6-93
NT2X57 Vol. 4, 1-338, Vol. 4, 1-342, Vol. 4, 1-350, Vol. 4, 1-355, Vol. 4, 1-362, Vol. 4, 1-369, Vol. 4, 1-376
in an RMM Vol. 4, 1-346
in ISM, MTM, STM Vol. 3, 6-93
in OAU Vol. 2, 10-7
NT2X59 Vol. 4, 1-383, Vol. 4, 1-387, Vol. 4, 1-401, Vol. 4, 1-406, Vol. 4, 1-413, Vol. 4, 1-420, Vol. 4, 1-427
in an RMM Vol. 4, 1-394
in MTM, TM Vol. 3, 6-27
in OAU Vol. 2, 10-7
NT2X65
in ISM, MTM, STM, TM Vol. 3, 6-93
NT2X66
in ISM, MTM, STM, TM Vol. 3, 6-93
NT2X70 Vol. 4, 1-434, Vol. 4, 1-441, Vol. 4, 1-464, Vol. 4, 1-478, Vol. 4, 1-506, Vol. 4, 1-517, Vol. 4, 1-526
in 6STA or MSB6 Vol. 2, 8-20
in an HIE Vol. 4, 1-455
in DCM, DES Vol. 1, 4-47
in DRAM Vol. 3, 6-69
in DTC, DTCI, IDTC, PDTC Vol. 3, 8-42
in EDRAM Vol. 3, 6-69
in ILGC, LGC, LGCI, PLGC Vol. 3, 8-42
in ILTC, LTC, LTCI, PLTC Vol. 3, 8-42
in IOC Vol. 1, 9-44
in LM controller Vol. 2, 2-36
in NT5X13 combined single-bay network Vol. 2, 9-40
in NT8X11 dual shelf network Vol. 2, 9-40
in remote line module Vol. 2, 11-28
in RLM Vol. 2, 11-28
in ST7G of MSB7 Vol. 2, 8-35
in STA7 or MSB7 Vol. 2, 8-20
in STCM of MSB6 Vol. 2, 8-35
in STM Vol. 3, 6-69
NT2X70 in TMS Vol. 3, 4-8
NT2X70 in TPC Vol. 3, 5-2
NT2X71
in ISM, MTM, STM Vol. 3, 6-93
NT2X72
in ISM, TM Vol. 3, 6-93
NT2X75
in ISM, MTM, STM Vol. 3, 6-93
NT2X77
in ISM, MTM, STM Vol. 3, 6-93
NT2X78
in TM Vol. 3, 6-93
NT2X80
in MTM, STM Vol. 3, 6-93
NT2X81
in TM Vol. 3, 6-93

NT2X82
in ISM, TM Vol. 3, 6-93
NT2X83
in TM Vol. 3, 6-93
NT2X84
in ISM, TM Vol. 3, 6-93
NT2X85
in ISM, TM Vol. 3, 6-93
NT2X86
in ISM, TM Vol. 3, 6-93
NT2X88
in TM Vol. 3, 6-93
NT2X90 Vol. 4, 1-533, Vol. 4, 1-538, Vol. 4, 1-543, Vol. 4, 1-557, Vol. 4, 1-562, Vol. 4, 1-569, Vol. 4, 1-576
in an RMM Vol. 4, 1-551
in ISM, TM Vol. 3, 6-93
NT2X92
in TM Vol. 3, 6-93
NT2X95
in TM Vol. 3, 6-93
NT2X96
in ISM, MTM, STM Vol. 3, 6-93
NT2X98
in ISM, TM Vol. 3, 6-93
NT3X02
in ISM, MTM, STM Vol. 3, 6-93
NT3X03
in ISM, MTM, STM Vol. 3, 6-93
NT3X04 Vol. 4, 1-583
in ISM, TM Vol. 3, 6-93
NT3X05
in MTM, STM Vol. 3, 6-93
NT3X06
in ISM, TM Vol. 3, 6-93
NT3X07
in ISM, TM Vol. 3, 6-93
NT3X08
in ISM, MTM, STM Vol. 3, 6-93
NT3X08AA in MTM Vol. 3, 6-64
NT3X09 Vol. 4, 1-590, Vol. 4, 1-596, Vol. 4, 1-601, Vol. 4, 1-612, Vol. 4, 1-617, Vol. 4, 1-624, Vol. 4, 1-634, Vol. 4, 1-644
in an RMM Vol. 4, 1-607
in ISM, MTM, STM Vol. 3, 6-93
NT3X16
in SuperNode ROS Vol. 3, 1-14
in SuperNode SE ROS Vol. 3, 1-14
NT3X17
in NT0X48 single-bay network Vol. 2, 9-72
NT3X18
in NT0X48 single-bay network Vol. 2, 9-72
NT3X19
in NT0X48 single-bay network Vol. 2, 9-72
NT3X20
in NT0X48 single-bay network Vol. 2, 9-72
NT3X21
in NT0X48 single-bay network Vol. 2, 9-72
NT3X22
in NT0X48 single-bay network Vol. 2, 9-72
NT3X23
in NT0X48 single-bay network Vol. 2, 9-72
NT3X24
in NT0X48 single-bay network Vol. 2, 9-72
NT3X47
in remote line controller Vol. 2, 11-9
in RLM Vol. 2, 11-9
NT3X48
in remote line controller Vol. 2, 11-9
in RLM Vol. 2, 11-9
NT3X49
in remote line controller Vol. 2, 11-9
in RLM Vol. 2, 11-9
NT3X65
in DCM Vol. 1, 4-37
NT3X67
in MTM, STM Vol. 3, 6-93
NT3X67 in MTM Vol. 2, 5-10
NT3X68
in MTM, STM Vol. 3, 6-93
NT3X70
in NT5X13 combined single-bay network Vol. 2, 9-72
NT3X71
in NT5X13 combined single-bay network Vol. 2, 9-72
NT3X72
in NT5X13 combined single-bay network Vol. 2, 9-72
NT3X73
in NT5X13 combined single-bay network Vol. 2, 9-72
NT3X74
in NT5X13 combined single-bay network Vol. 2, 9-72
in NT8X11 dual-shelf network Vol. 2, 9-72

NT3X75
in NT5X13 combined single-bay network Vol. 2, 9-72
in NT8X11 dual-shelf network Vol. 2, 9-72
NT3X76
in NT5X13 combined single-bay network Vol. 2, 9-72
in NT8X11 dual-shelf network Vol. 2, 9-72
NT3X82 Vol. 4, 1-653
in OAU Vol. 2, 10-7
NT3X83 Vol. 4, 1-660
in OAU Vol. 2, 10-7
NT3X84
in OAU Vol. 2, 10-7
NT3X85
in OAU Vol. 2, 10-7
NT3X86
in NT5X13 combined single-bay network Vol. 2, 9-72
NT3X91
in ISM, TM Vol. 3, 6-93
NT4X23
in ISM, MTM, STM Vol. 3, 6-93
NT4X65
in MTM, STM, TM Vol. 3, 6-27
in OAU Vol. 2, 10-7
NT4X97 Vol. 4, 1-668, Vol. 4, 1-673, Vol. 4, 1-680
in ISM, MTM, STM Vol. 3, 6-44
NT4X98 Vol. 4, 1-687, Vol. 4, 1-694
in ISM, MTM, STM Vol. 3, 6-44
NT5X03
in ISM, TM Vol. 3, 6-93
NT5X04
in ISM, TM Vol. 3, 6-93
NT5X06
in TM Vol. 3, 6-93
NT5X25
in ISM, TM Vol. 3, 6-93
NT5X29
in ISM, MTM, STM Vol. 3, 6-93
NT5X30
in ISM, MTM, STM, TM Vol. 3, 6-93
NT6X1205
in DTC, IDTC, PDTC Vol. 3, 8-19
in ILGC, LGC, PLGC Vol. 3, 8-19
in ILTC, LTC, PLTC Vol. 3, 8-19
NT6X17 Vol. 4, 1-703, Vol. 4, 1-707, Vol. 4, 1-711, Vol. 4, 1-715, Vol. 4, 1-723, Vol. 4, 1-731
in ILCM, LCM, LCME Vol. 2, 1-39
in LM line drawer Vol. 2, 2-24, Vol. 2, 11-16
NT6X18 Vol. 4, 1-743, Vol. 4, 1-747, Vol. 4, 1-751, Vol. 4, 1-755, Vol. 4, 1-759, Vol. 4, 1-767, Vol. 4, 1-775
in LCM, LCME Vol. 2, 1-39
in LM line drawer Vol. 2, 2-24, Vol. 2, 11-16
NT6X19 Vol. 4, 1-787, Vol. 4, 1-791, Vol. 4, 1-795, Vol. 4, 1-799, Vol. 4, 1-807, Vol. 4, 1-815
in LCM, LCME Vol. 2, 1-39
NT6X20 Vol. 4, 1-827, Vol. 4, 1-831, Vol. 4, 1-835, Vol. 4, 1-839, Vol. 4, 1-847, Vol. 4, 1-855
in LCM Vol. 2, 1-73
NT6X21 Vol. 4, 1-867, Vol. 4, 1-871, Vol. 4, 1-875, Vol. 4, 1-883, Vol. 4, 1-893, Vol. 4, 1-902, Vol. 4, 1-911
in an LCM Vol. 4, 1-879
in LCM, LCME Vol. 2, 1-39
NT6X23
in LCM Vol. 2, 1-73
NT6X27 Vol. 4, 1-924, Vol. 4, 1-931, Vol. 4, 1-938
in IDTC, ILGC, ILTC Vol. 3, 8-124
in PDTC, PLGC, PLTC Vol. 3, 8-124
NT6X28
in IDTC, ILGC, ILTC Vol. 3, 8-31
in IPDTC, PLGC, LTCO, PLTC Vol. 3, 8-31
NT6X30 Vol. 4, 1-945, Vol. 4, 1-960, Vol. 4, 1-974, Vol. 4, 1-988, Vol. 4, 1-1002
in LCE, LCEI Vol. 2, 1-47
NT6X33
in ILCM, LCM, LCME Vol. 2, 1-39
NT6X36 Vol. 4, 1-1021, Vol. 4, 1-1031, Vol. 4, 1-1036
in an FSP Vol. 4, 1-1016, Vol. 4, 1-1026
in LCE frame Vol. 1, 8-192
in LCEI frame Vol. 1, 8-192
NT6X40 Vol. 5, 1-38, Vol. 5, 1-51
in 6STA of MSB6 Vol. 2, 8-48
in DTC, DTCI, IDTC, DTCO, PDTC Vol. 3, 8-59
in ILGC, LGC, LGCI, LGCO,PLGC Vol. 3, 8-59

in ILTC, LTC, LTCI, LTCO, PLTC Vol. 3, 8-59
in STA7 of MSB7 Vol. 2, 8-48
NT6X41 Vol. 5, 1-78, Vol. 5, 1-87, Vol. 5, 1-95
in DTC, DTCI, IDTC, DTCO, PDTC Vol. 3, 8-31
in ILGC, LGC, LGCI, LGCO, PLGC Vol. 3, 8-31
in ILTC, LTC, LTCI, LTCO, PLTC Vol. 3, 8-31
NT6X42 Vol. 5, 1-114, Vol. 5, 1-122
in DTC, DTCI, IDTC, DTCO, PDTC Vol. 3, 8-31
in ILGC, LGC, LGCI, LGCO, PLGC Vol. 3, 8-31
in ILTC, LTC, LTCI, LTCO, PLTC Vol. 3, 8-31
NT6X43
in DTC, LGC, LTC Vol. 3, 8-31
NT6X44 Vol. 5, 1-130, Vol. 5, 1-144, Vol. 5, 1-158
in DTC, DTCI, IDTC, DTCO, PDTC Vol. 3, 8-31
in ILGC, LGC, LGCI, LGCO, PLGC Vol. 3, 8-31
in ILTC, LTC, LTCI, LTCO, PLTC Vol. 3, 8-31
NT6X45 Vol. 5, 1-166, Vol. 5, 1-172, Vol. 5, 1-178, Vol. 5, 1-184
in 6STA of MSB6 Vol. 2, 8-62
in STA7 of MSB7 Vol. 2, 8-62
NT6X46
in 6STA of MSB6 Vol. 2, 8-62
in STA7 of MSB7 Vol. 2, 8-62
NT6X47 Vol. 5, 1-190, Vol. 5, 1-196, Vol. 5, 1-202
in 6STA of MSB6 Vol. 2, 8-62
in STA7 of MSB7 Vol. 2, 8-62
NT6X48 Vol. 3, 8-72, Vol. 3, 8-82, Vol. 5, 1-208
NT6X50 Vol. 5, 1-216, Vol. 5, 1-223, Vol. 5, 1-237, Vol. 5, 1-244
in an HIE Vol. 5, 1-230
in DTC, DTCI, IDTC, DTCO, DTCOI Vol. 3, 8-124
in ILGC LGC, LGCI, LGCO Vol. 3, 8-124
in ILTC, LTC, LTCI, LTCO Vol. 3, 8-124
NT6X51 Vol. 5, 1-291, Vol. 5, 1-298, Vol. 5, 1-305, Vol. 5, 1-312, Vol. 5, 1-324, Vol. 5, 1-332, Vol. 5, 1-339, Vol. 5, 1-347
in an LCM Vol. 5, 1-319
in LCM, ILCM Vol. 2, 1-31
NT6X52 Vol. 5, 1-355, Vol. 5, 1-361, Vol. 5, 1-367, Vol. 5, 1-373, Vol. 5, 1-384, Vol. 5, 1-392, Vol. 5, 1-401, Vol. 5, 1-410
in an LCM Vol. 5, 1-379
in LCM, ILCM Vol. 2, 1-31
NT6X53 Vol. 5, 1-418, Vol. 5, 1-425, Vol. 5, 1-432, Vol. 5, 1-444, Vol. 5, 1-460, Vol. 5, 1-469, Vol. 5, 1-478
in an LCM Vol. 5, 1-453
in LCM, LCME Vol. 2, 1-79
NT6X54 Vol. 5, 1-493, Vol. 5, 1-500, Vol. 5, 1-509, Vol. 5, 1-518, Vol. 5, 1-533, Vol. 5, 1-542, Vol. 5, 1-549
in an LCM Vol. 5, 1-527
in ILCM, LCM Vol. 2, 1-13
NT6X55
in DTC, IDTC, DTCO, PDTC Vol. 3, 8-124
in ILGC, LGC, LGCO, PLGC Vol. 3, 8-124
in ILTC, LTC, LTCO, PLTC Vol. 3, 8-124
NT6X60 Vol. 5, 1-565, Vol. 5, 1-572, Vol. 5, 1-579, Vol. 5, 1-587
NT6X62
in DTC, IDTC, DTCO, PDTC Vol. 3, 8-31
in ILGC, LGCO, PLGC Vol. 3, 8-31
NT6X65
in STCM of MSB6 Vol. 2, 8-70
NT6X66
in ST7G of MSB7 Vol. 2, 8-70
NT6X68
in MSB6 Vol. 2, 8-55
in MSB7 Vol. 2, 8-55
NT6X69 Vol. 5, 1-595, Vol. 5, 1-605, Vol. 5, 1-613, Vol. 5, 1-622, Vol. 5, 1-630, Vol. 5, 1-639, Vol. 5, 1-670, Vol. 5, 1-678
in DTC, DTCI, IDTC, DTCO, PDTC Vol. 3, 8-31
in ILGC, LGC, LGCI, LGCO, PLGC Vol. 3, 8-31
in ILTC, LTC, LTCI, LTCO, PLTC Vol. 3, 8-31
NT6X69 in TMS Vol. 3, 4-19
NT6X70
in LGC, LGCI Vol. 3, 8-31
in LTC, LTCI Vol. 3, 8-31
NT6X71 Vol. 5, 1-684, Vol. 5, 1-688, Vol. 5, 1-692, Vol. 5, 1-696, Vol. 5, 1-705, Vol. 5, 1-713

in LCM, LCME Vol. 2, 1-39
NT6X72 Vol. 5, 1-725
NT6X73 Vol. 5, 1-734, Vol. 5, 1-738, Vol. 5, 1-742, Vol. 5, 1-751
in an HIE Vol. 5, 1-746
NT6X74 Vol. 5, 1-755, Vol. 5, 1-761, Vol. 5, 1-775, Vol. 5, 1-782, Vol. 5, 1-790, Vol. 5, 1-799, Vol. 5, 1-808
in an RMM Vol. 5, 1-768
NT6X75 Vol. 5, 1-817, Vol. 5, 1-824, Vol. 5, 1-831, Vol. 5, 1-838
NT6X76 Vol. 5, 1-845, Vol. 5, 1-853, Vol. 5, 1-861
in LCM, LCME Vol. 2, 1-39
NT6X78 Vol. 5, 1-876, Vol. 5, 1-883, Vol. 5, 1-891, Vol. 5, 1-898, Vol. 5, 1-905, Vol. 5, 1-912, Vol. 5, 1-946
in ILGC Vol. 3, 8-90
in ILTC Vol. 3, 8-90
in LGC Vol. 3, 8-90
in LGCO Vol. 3, 8-90
in LGCOI Vol. 3, 8-90
in LTC Vol. 3, 8-90
in LTCO Vol. 3, 8-90
in LTCOI Vol. 3, 8-90
in PLGC Vol. 3, 8-90
in PLTC Vol. 3, 8-90
NT6X79
in DTC, DTCO, PDTC Vol. 3, 8-31
in LGC, LGCI Vol. 3, 8-31
in LTC, LTCI Vol. 3, 8-31
NT6X80 Vol. 5, 1-964, Vol. 5, 1-972, Vol. 5, 1-981
NT6X85 Vol. 6, 1-2, Vol. 6, 1-13, Vol. 6, 1-24
NT6X86 Vol. 6, 1-30, Vol. 6, 1-39
NT6X87 Vol. 6, 1-48, Vol. 6, 1-56
NT6X92 Vol. 6, 1-64, Vol. 6, 1-71, Vol. 6, 1-79, Vol. 6, 1-87, Vol. 6, 1-95, Vol. 6, 1-104, Vol. 6, 1-140, Vol. 6, 1-243
in DTC, DTCI, IDTC, DTCO, PDTC Vol. 3, 8-31
in ILGC, LGC, LGCI, LGCO, PLGC Vol. 3, 8-31
in ILTC, LTC, LTCI, LGCO, PLTC Vol. 3, 8-31
NT6X93
in ILCM, LCM Vol. 2, 1-39
NT6X94
in ILCM Vol. 2, 1-39
NT6X95
in LCME Vol. 2, 1-73
NT6X98
in ILCM, LCM, LCME Vol. 2, 1-39
NT6X99 Vol. 6, 1-146, Vol. 6, 1-150, Vol. 6, 1-154, Vol. 6, 1-158, Vol. 6, 1-162, Vol. 6, 1-170, Vol. 6, 1-178
in LCM, LCME Vol. 2, 1-39
NT6Xseries in TMS Vol. 3, 4-17
NT7X05 Vol. 6, 1-190, Vol. 6, 1-198, Vol. 6, 1-207, Vol. 6, 1-234, Vol. 6, 1-252
in LGC, LGCI, LTC, LTCI, DTC, DTCI Vol. 3, 8-31
NT8X02 Vol. 6, 1-261, Vol. 6, 1-265
NT8X12
in NT8X11 dual-shelf network Vol. 2, 9-72
NT8X13
in NT8X11 dual-shelf network Vol. 2, 9-72
NT8X14
in NT8X11 dual-shelf network Vol. 2, 9-72
NT8X18 Vol. 6, 1-270
NT8X99
in LCM Vol. 2, 1-79
NT9X10
in SuperNode CM Vol. 1, 2-22
in SuperNode SE CM/SLM Vol. 1, 3-85
NT9X12
in SuperNode CM Vol. 1, 2-22
in SuperNode SE CM/SLM Vol. 1, 3-85
in SuperNode SLM Vol. 3, 3-137
NT9X13
in an ELPP LIM unit Vol. 1, 5-36
in ENET 128k Vol. 2, 9-49
in ENET 64k Vol. 2, 9-49
in file processor Vol. 1, 7-43
in LIM unit of LPP Vol. 2, 3-89
in SuperNode CM Vol. 1, 2-22
in SuperNode MS Vol. 2, 6-39
in SuperNode SE 16k ENET Vol. 1, 6-77
in SuperNode SE CM/SLM Vol. 1, 3-85
in SuperNode SE ENI shelf Vol. 1, 6-77
in SuperNode SE MS Vol. 2, 7-25
NT9X14
in APU in LPP LIS Vol. 2, 3-9
in file processor Vol. 1, 7-43
in LIM unit of LPP Vol. 2, 3-155
in SuperNode CM Vol. 1, 2-22
in SuperNode MS Vol. 2, 6-39
in SuperNode SE CM/SLM Vol. 1, 3-85

NT9X15
in LIM unit of ELPP Vol. 1, 5-48
in LIM unit of LPP Vol. 2, 3-155
in SuperNode MS Vol. 2, 6-39
in SuperNode SE MS Vol. 2, 7-25
NT9X17
in LIM unit of ELPP Vol. 1, 5-48
in LIM unit of LPP Vol. 2, 3-155
in SuperNode MS Vol. 2, 6-39
in SuperNode SE MS Vol. 2, 7-25
NT9X20
in SuperNode CM Vol. 1, 2-5, Vol. 3, 3-37, Vol. 3, 3-78
in SuperNode MS Vol. 2, 6-5
NT9X21
in file processor Vol. 1, 7-43
in SuperNode CM Vol. 1, 2-22
in SuperNode SE CM/SLM Vol. 1, 3-85
in SuperNode SLM Vol. 3, 3-137
NT9X22
in SuperNode CM Vol. 1, 2-22
in SuperNode SLM Vol. 3, 3-137
NT9X23
in LIM unit of LPP Vol. 2, 3-155
in SuperNode MS Vol. 2, 6-5
in SuperNode SE MS Vol. 2, 7-5
NT9X25
in SuperNode MS Vol. 2, 6-39
in SuperNode SE MS Vol. 2, 7-25
NT9X26
in ENET 128k Vol. 2, 9-49
in ENET 64k Vol. 2, 9-49
in file processor Vol. 1, 7-43
in LIM unit of ELPP Vol. 1, 5-48
in LIM unit of LPP Vol. 2, 3-155
in SuperNode CM Vol. 1, 2-22
in SuperNode MS Vol. 2, 6-39
in SuperNode SE 16k ENET Vol. 1, 6-77
in SuperNode SE CM/SLM Vol. 1, 3-85
in SuperNode SE ENI shelf Vol. 1, 6-77
in SuperNode SE MS Vol. 2, 7-25
NT9X27
in superNode CM Vol. 1, 2-22
in SuperNode SLM Vol. 3, 3-137
NT9X30
in ENET 128k Vol. 2, 9-49
in ENET 64k Vol. 2, 9-49
in LIM unit of ELPP Vol. 1, 5-48
in LIM unit of LPP Vol. 2, 3-155
in LPP LIS Vol. 2, 3-100
in SSLPP Vol. 3, 2-74
in SuperNode CM Vol. 1, 2-22
in SuperNode MS Vol. 2, 6-39
in SuperNode SE 16k ENET Vol. 1, 6-53
in SuperNode SE ENI shelf Vol. 1, 6-53
in SuperNode SE LIS Vol. 2, 4-64
in SuperNode SE MS Vol. 2, 7-25
in SuperNode SLM Vol. 3, 3-137
NT9X31
in ENET 128k Vol. 2, 9-49
in ENET 64k Vol. 2, 9-49
in LIM unit of ELPP Vol. 1, 5-48
in SSLPP Vol. 3, 2-74
in SuperNode CM Vol. 1, 2-22
in SuperNode MS Vol. 2, 6-39
in SuperNode SE 16k ENET Vol. 1, 6-53
in SuperNode SE ENI shelf Vol. 1, 6-53
in SuperNode SE MS Vol. 2, 7-25
NT9X32
in SuperNode MS Vol. 2, 6-39
NT9X35
in ENET 128k Vol. 2, 9-15
in ENET 64k Vol. 2, 9-15
in SuperNode SE 16k ENET Vol. 1, 6-7
in SuperNode SE 32k ENET Vol. 1, 6-31
in SuperNode SE ENI shelf Vol. 1, 6-7
NT9X36
in ENET 128K Vol. 2, 9-49
in ENET 64k Vol. 2, 9-49
in SuperNode SE 16k ENET Vol. 1, 6-77
in SuperNode SE ENI shelf Vol. 1, 6-77
NT9X40
in ENET 128k Vol. 2, 9-15
in ENET 64k Vol. 2, 9-15
in SuperNode SE 16k ENET Vol. 1, 6-7, Vol. 1, 6-77
in SuperNode SE 32k ENET Vol. 1, 6-31
in SuperNode SE ENI shelf Vol. 1, 6-7, Vol. 1, 6-77
NT9X41
in ENET 128k Vol. 2, 9-15
in ENET 64k Vol. 2, 9-15
in SuperNode SE 16k ENET Vol. 1, 6-7
in SuperNode SE 32k ENET Vol. 1, 6-31
in SuperNode SE ENI shelf Vol. 1, 6-7
NT9X44
in SuperNode SE CM/SLM Vol. 1, 3-5
in SuperNode SLM Vol. 3, 3-5
NT9X45
in ENET 128k Vol. 2, 9-15

in ENET 64k Vol. 2, 9-15
in SuperNode SE 16k ENET Vol. 1, 6-7
in SuperNode SE 32k ENET Vol. 1, 6-31
in SuperNode SE ENI shelf Vol. 1, 6-7
NT9X46
in SuperNode SE CM/SLM Vol. 1, 3-27
in SuperNode SLM Vol. 3, 3-137
NT9X47
in SuperNode SLM Vol. 3, 3-137
NT9X49
in LIM unit of ELPP Vol. 1, 5-48
in LIM unit of LPP Vol. 2, 3-155
in SuperNode MS Vol. 2, 6-39
in SuperNode SE MS Vol. 2, 7-25
NT9X52
in LIM unit of ELPP Vol. 1, 5-48
in LIM unit of LPP Vol. 2, 3-155
in SuperNode MS Vol. 2, 6-39
in SuperNode SE MS Vol. 2, 7-25
NT9X53
in LIM unit of ELPP Vol. 1, 5-48
in LIM unit of LPP Vol. 2, 3-155
in SuperNode MS Vol. 2, 6-39
in SuperNode SE MS Vol. 2, 7-25
NT9X54
in SuperNode MS Vol. 2, 6-5
in SuperNode SE MS Vol. 2, 7-5
NT9X62
in file processor Vol. 1, 7-43
in LIM unit of ELPP Vol. 1, 5-48
in SuperNode MS Vol. 2, 6-5
in SuperNode SE CM/SLM Vol. 1, 3-45
in SuperNode SE MS Vol. 2, 7-5
NT9X69
in SuperNode MS Vol. 2, 6-5
in SuperNode SE MS Vol. 2, 7-5
NT9X73
in LIM unit of ELPP Vol. 1, 5-48
in LIM unit of LPP Vol. 2, 3-155
in SuperNode SE MS Vol. 2, 7-25
NT9X74
in ELPP LIS Vol. 1, 5-9
in LPP LIS Vol. 2, 3-126
in SuperNode SE ENI shelf Vol. 2, 4-6
in SuperNode SE LIS Vol. 2, 4-6
NT9X76
in EIU in LPP LIS Vol. 2, 3-47
in EIU in SSLPP Vol. 3, 2-17
in EIU in SuperNode SE LIS Vol. 2, 4-13
in LIU7 in LPP LIS Vol. 2, 3-57
in LIU7 in SSLPP Vol. 3, 2-44
in LIU7 in SuperNode SE ENI shelf Vol. 2, 4-38
in LIU7 in SuperNode SE LIS Vol. 2, 4-38
NT9X77
in LIU7 in LPP LIS Vol. 2, 3-57
in LIU7 in SSLPP Vol. 3, 2-44
in LIU7 in SuperNode SE ENI shelf Vol. 2, 4-38
in LIU7 in SuperNode SE LIS Vol. 2, 4-38
NT9X78
in LIU7 in LPP LIS Vol. 2, 3-57
in LIU7 in SSLPP Vol. 3, 2-44
in LIU7 in SuperNode SE ENI shelf Vol. 2, 4-38
in LIU7 in SuperNode SE LIS Vol. 2, 4-38
NT9X79
in ELPP LIS Vol. 1, 5-9
in LIM unit of ELPP Vol. 1, 5-48
in LIM unit of LPP Vol. 2, 3-155
in LPP LIS Vol. 2, 3-36
in SuperNode SE ENI shelf Vol. 2, 4-6
in SuperNode SE LIS Vol. 2, 4-6
in SuperNode SE MS Vol. 2, 7-5
NT9X84
in EIU in LPP LIS Vol. 2, 3-47
NT9X85
in EIU in LPP LIS Vol. 2, 3-47
in EIU in SSLPP Vol. 3, 2-17
in EIU in SuperNode SE LIS Vol. 2, 4-13
NT9X86
in file processor Vol. 1, 7-43
in SuperNode SE CM/SLM Vol. 1, 3-85
NT9X87
in file processor Vol. 1, 7-43
NT9X88
in file processor Vol. 1, 7-43
NT9X89
in file processor Vol. 1, 7-6
NT9X90
in file processor Vol. 1, 7-18
NT9X91
in file processor Vol. 1, 7-33
in SuperNode SE CM/SLM Vol. 1, 3-67
NT9X96
in SSLPP Vol. 3, 2-7
NT9X98
in SSLPP Vol. 3, 2-7
NTAX74 Vol. 6, 1-281, Vol. 6, 1-292
in DTCI, PDTC Vol. 3, 8-147

NTAX78 Vol. 6, 1-369
in DTCI Vol. 3, 8-31
NTBX01 Vol. 6, 1-381, Vol. 6, 1-390, Vol. 6, 1-399, Vol. 6, 1-408, Vol. 6, 1-437
in DTCI, LGCI, LTCI Vol. 3, 8-147
in DTCO, LTCO, LGCO, PDTC, PLTC, PLGC Vol. 3, 8-147
NTBX01 in TMS Vol. 3, 4-30
NTBX02 Vol. 6, 1-443, Vol. 6, 1-456, Vol. 6, 1-469, Vol. 6, 1-482, Vol. 6, 1-495
LGCI, PLGC Vol. 3, 8-115
LTCI, PLTC Vol. 3, 8-115
NTBX02 in TMS Vol. 3, 4-37
NTBX25
in LCME Vol. 2, 1-39
NTBX26 Vol. 6, 1-538, Vol. 6, 1-546, Vol. 6, 1-554
in LCME Vol. 2, 1-39
NTBX27 Vol. 6, 1-562, Vol. 6, 1-570, Vol. 6, 1-578
in LCME Vol. 2, 1-39
NTBX34 Vol. 6, 1-593, Vol. 6, 1-601, Vol. 6, 1-611, Vol. 6, 1-621
in LCME Vol. 2, 1-31
NTBX35 Vol. 6, 1-630, Vol. 6, 1-638, Vol. 6, 1-648, Vol. 6, 1-658
in LCME Vol. 2, 1-31
NTBX36 Vol. 6, 1-667, Vol. 6, 1-677, Vol. 6, 1-687
in LCME Vol. 2, 1-13
NTBX71
in LCME Vol. 2, 1-62
NTBX72 Vol. 6, 1-697, Vol. 6, 1-706, Vol. 6, 1-715, Vol. 6, 1-724
in LCME Vol. 2, 1-79
NTCX50
in PDTC Vol. 3, 8-19
NTDX15
in file processor Vol. 1, 7-43
in SuperNode SE CM/SLM Vol. 1, 3-67
NTDX16
in LPP LIS Vol. 2, 3-140
NTEX17 Vol. 6, 1-733, Vol. 6, 1-743, Vol. 6, 1-753, Vol. 6, 1-763, Vol. 6, 1-773
in LCM Vol. 2, 1-39
NTEX20
in ELPP LIS Vol. 1, 5-9
in LPP LIS Vol. 2, 3-36
in SSLPP Vol. 3, 2-7
in SuperNode SE ENI shelf Vol. 2, 4-6
in SuperNode SE LIS Vol. 2, 4-6
NTEX22
in APU in LPP LIS Vol. 2, 3-9
in EIU in SSLPP Vol. 3, 2-17
in EIU in SuperNode SE LIS Vol. 2, 4-13
in FRIU in LPP LIS Vol. 2, 3-68
in FRIU in SSLPP Vol. 3, 2-29
in FRIU SuperNode SE LIS Vol. 2, 4-24
in HLIU in an ELPP LIS Vol. 1, 5-17
in HSLR in an ELPP LIS Vol. 1, 5-27
in LIU7 in LPP LIS Vol. 2, 3-57
in LIU7 in SSLPP Vol. 3, 2-44
in LIU7 in SuperNode SE ENI shelf Vol. 2, 4-38
in LIU7 in SuperNode SE LIS Vol. 2, 4-38
in NIU in LPP LIS Vol. 2, 3-82
in NIU in SSLPP Vol. 3, 2-57
in NIU in SuperNode SE LIS Vol. 2, 4-49
in VPU in LPP LIS Vol. 2, 3-168
in XLIU in LPP LIS Vol. 2, 3-177
in XLIU in SSLPP Vol. 3, 2-105
in XLIU in SuperNode SE LIS Vol. 2, 4-91
NTEX25
in NIU in LPP LIS Vol. 2, 3-82
in NIU in SSLPP Vol. 3, 2-57
in NIU in SuperNode SE LIS Vol. 2, 4-49
NTEX26
in LIU7 in LPP LIS Vol. 2, 3-57
in LIU7 in SSLPP Vol. 3, 2-44
in LIU7 in SuperNode SE ENI shelf Vol. 2, 4-38
in LIU7 in SuperNode SE LIS Vol. 2, 4-38
NTEX28
in NIU in LPP LIS Vol. 2, 3-145
in NIU in SSLPP Vol. 3, 2-57
in NIU in SuperNode SE LIS Vol. 2, 4-49
NTEX30
in FRIU in LPP LIS Vol. 2, 3-68
in FRIU in SSLPP Vol. 3, 2-29
in FRIU in SuperNode SE LIS Vol. 2, 4-24
NTEX31
in FRIU in LPP LIS Vol. 2, 3-68
in FRIU in SSLPP Vol. 3, 2-29
in FRIU in SuperNode SE LIS Vol. 2, 4-24
NTEX54 Vol. 6, 1-783, Vol. 6, 1-800, Vol. 6, 1-817, Vol. 6, 1-834, Vol. 6, 1-851
in LCM Vol. 2, 1-13

NTEX76
in HLIU in an ELPP LIS Vol. 1, 5-17
NTEX78
in HLIU in an ELPP LIS Vol. 1, 5-17
NTFX09
in XLIU in LPP LIS Vol. 2, 3-177
in XLIU in SSLPP Vol. 3, 2-105
in XLIU in SuperNode SE LIS Vol. 2, 4-91
NTFX10
in XLIU in LPP LIS Vol. 2, 3-177
in XLIU in SSLPP Vol. 3, 2-105
in XLIU in SuperNode SE LIS Vol. 2, 4-91
NTFX32AA
in an ISM Vol. 1, 9-92
NTFX42
in ISM Vol. 3, 6-27
NTFX43
in ISM Vol. 3, 6-69
NTMX45 Vol. 6, 1-898
NTMX71 Vol. 6, 1-908, Vol. 6, 1-932, Vol. 6, 1-940
in DTC, DTCI, IDTC, PDTC Vol. 3, 8-19
in ILGC, LGC, LGCI, PLGC Vol. 3, 8-19
in ILTC, LTC, LTCI, PLTC Vol. 3, 8-19
NTMX72 Vol. 6, 1-949, Vol. 6, 1-957, Vol. 6, 1-966, Vol. 6, 1-975, Vol. 6, 1-984, Vol. 6, 1-993
NTMX73 Vol. 7, 1-2, Vol. 7, 1-9, Vol. 7, 1-17, Vol. 7, 1-26, Vol. 7, 1-36, Vol. 7, 1-45
NTMX74 Vol. 7, 1-60, Vol. 7, 1-69, Vol. 7, 1-77, Vol. 7, 1-86, Vol. 7, 1-95, Vol. 7, 1-104
NTMX75 Vol. 7, 1-113, Vol. 7, 1-120, Vol. 7, 1-128, Vol. 7, 1-136, Vol. 7, 1-144, Vol. 7, 1-153
NTMX76 Vol. 7, 1-168, Vol. 7, 1-175, Vol. 7, 1-182, Vol. 7, 1-188, Vol. 7, 1-195, Vol. 7, 1-205
in DTC, DTCI, IDTC, DTCO, PDTC Vol. 3, 8-31
in ILGC, LGC, LGCI, LGCO, PLGC Vol. 3, 8-31
in ILTC, LTC, LTCI, LTCO, PLTC Vol. 3, 8-31
NTMX77 Vol. 7, 1-221, Vol. 7, 1-234, Vol. 7, 1-241, Vol. 7, 1-254, Vol. 7, 1-267, Vol. 7, 1-280, Vol. 7, 1-293, Vol. 7, 1-306, Vol. 7, 1-318
in DTC, DTCI, IDTC, DTCO, PDTC Vol. 3, 8-147
in ILGC, LGC, LGCI, LGCO, PLGC Vol. 3, 8-147
in ILTC, LTC, LTCI, LTCO, PLTC Vol. 3, 8-147
NTMX77 in TMS Vol. 3, 4-48
NTMX79 Vol. 7, 1-333, Vol. 7, 1-343, Vol. 7, 1-349, Vol. 7, 1-359, Vol. 7, 1-370, Vol. 7, 1-380
NTMX81 Vol. 7, 1-397, Vol. 7, 1-409, Vol. 7, 1-421, Vol. 7, 1-592
NTMX82 Vol. 7, 1-465, Vol. 7, 1-476, Vol. 7, 1-486, Vol. 7, 1-496
NTMX87 Vol. 7, 1-508, Vol. 7, 1-528, Vol. 7, 1-548, Vol. 7, 1-571
NTMX97
in VPU in LPP LIS Vol. 2, 3-168
NTMX99
in VPU in LPP LIS Vol. 2, 3-168
NTNX62 in TPC Vol. 3, 5-7
NTNX63 in TPC Vol. 3, 5-12
NTNX64 in TPC Vol. 3, 5-17
NTNX65 in TPC Vol. 3, 5-22
NTNX66 in TPC Vol. 3, 5-27
NTNX68 in TPC Vol. 3, 5-33
NTOM36 keyboard Vol. 3, 5-40
NTOM90 in MP Vol. 3, 5-45
NTOM92 in MP Vol. 3, 5-52
NTRX41 Vol. 7, 1-630, Vol. 7, 1-635, Vol. 7, 1-640, Vol. 7, 1-650
NTRX42 Vol. 7, 1-660, Vol. 7, 1-677, Vol. 7, 1-695, Vol. 7, 1-726, Vol. 7, 1-746
NTRX43 Vol. 7, 1-778, Vol. 7, 1-785, Vol. 7, 1-792, Vol. 7, 1-808
NTRX44 Vol. 7, 1-824, Vol. 7, 1-836, Vol. 7, 1-858
NTRX54 Vol. 7, 1-868, Vol. 7, 1-882
NTRX66 Vol. 7, 1-896
NTSX06
in LTC, LTC, DTC, LGCI, and LTCI Vol. 3, 8-147
card replacement procedutes
NTBX01 Vol. 6, 1-374
cards
inserting Vol. 3, 9-156
removing Vol. 3, 9-156

M

Maintenance
returning cards Vol. 3, 9-184
Media access control address
DBIC provisioning Vol. 6, 1-785, Vol. 6, 1-797, Vol. 6, 1-802, Vol. 6, 1-814, Vol. 6, 1-819, Vol. 6, 1-831, Vol. 6, 1-836, Vol. 6, 1-848, Vol. 6, 1-853, Vol. 6, 1-865

N

NT0X10
card replacement procedures Vol. 4, 1-2, Vol. 4, 1-6, Vol. 4, 1-14, Vol. 4, 1-18, Vol. 4, 1-25, Vol. 4, 1-31, Vol. 4, 1-37, Vol. 4, 1-43
NT0X91
card replacement procedures Vol. 4, 1-61
NT0X91AA
card replacement procedures Vol. 4, 1-49, Vol. 4, 1-90
NT0X91AE
card replacement procedures Vol. 4, 1-49, Vol. 4, 1-96, Vol. 4, 1-105
NT1X76 in MTM
card replacement procedures Vol. 2, 5-2
NT2X06
card replacement procedures Vol. 4, 1-114, Vol. 4, 1-121, Vol. 4, 1-129, Vol. 4, 1-136, Vol. 4, 1-144, Vol. 4, 1-153, Vol. 4, 1-162
NT2X09
card replacement procedures Vol. 4, 1-171, Vol. 4, 1-178, Vol. 4, 1-186, Vol. 4, 1-194, Vol. 4, 1-202, Vol. 4, 1-211, Vol. 4, 1-220
NT2X10
card replacement procedures Vol. 4, 1-229, Vol. 4, 1-233, Vol. 4, 1-237, Vol. 4, 1-244, Vol. 4, 1-251, Vol. 4, 1-258
NT2X11
card replacement procedures Vol. 4, 1-265, Vol. 4, 1-270, Vol. 4, 1-278, Vol. 4, 1-282, Vol. 4, 1-289, Vol. 4, 1-298, Vol. 4, 1-307
NT2X48
card replacement procedures Vol. 4, 1-316, Vol. 4, 1-321, Vol. 4, 1-326
NT2X55
card replacement procedures Vol. 4, 1-331
NT2X57
card replacement procedures Vol. 4, 1-338, Vol. 4, 1-342, Vol. 4, 1-350, Vol. 4, 1-355, Vol. 4, 1-362, Vol. 4, 1-369, Vol. 4, 1-376
NT2X59
card replacement procedures Vol. 4, 1-383, Vol. 4, 1-387, Vol. 4, 1-401, Vol. 4, 1-406, Vol. 4, 1-413, Vol. 4, 1-420, Vol. 4, 1-427
NT2X70
card replacement procedures Vol. 4, 1-434, Vol. 4, 1-441, Vol. 4, 1-464, Vol. 4, 1-478, Vol. 4, 1-490, Vol. 4, 1-498, Vol. 4, 1-506, Vol. 4, 1-517, Vol. 4, 1-526
NT2X70 in TMS
card replacement procedures Vol. 3, 4-8
NT2X70 in TPC
card replacement procedures Vol. 3, 5-2
NT2X90
card replacement procedures Vol. 4, 1-533, Vol. 4, 1-538, Vol. 4, 1-543, Vol. 4, 1-557, Vol. 4, 1-562, Vol. 4, 1-569, Vol. 4, 1-576
NT3X04
card replacement procedures Vol. 4, 1-583
NT3X08AA in MTM
card replacement procedures Vol. 3, 6-64
NT3X09
card replacement procedures Vol. 4, 1-590, Vol. 4, 1-596, Vol. 4, 1-601, Vol. 4, 1-612, Vol. 4, 1-617, Vol. 4, 1-624, Vol. 4, 1-634, Vol. 4, 1-644
NT3X67 in MTM
card replacement procedures Vol. 2, 5-10
NT3X82
card replacement procedures Vol. 4, 1-653
NT3X83
card replacement procedures Vol. 4, 1-660
NT4X97
card replacement procedures Vol. 4, 1-668, Vol. 4, 1-673, Vol. 4, 1-680
NT4X98
card replacement procedures Vol. 4, 1-687, Vol. 4, 1-694
NT6X17
card replacement procedures Vol. 4, 1-703, Vol. 4, 1-707, Vol. 4, 1-711, Vol. 4, 1-715, Vol. 4, 1-723, Vol. 4, 1-731, Vol. 4, 1-739

NT6X18
card replacement procedures Vol. 4, 1-743, Vol. 4, 1-747, Vol. 4, 1-751, Vol. 4, 1-755, Vol. 4, 1-759, Vol. 4, 1-767, Vol. 4, 1-775, Vol. 4, 1-783
NT6X19
card replacement procedures Vol. 4, 1-787, Vol. 4, 1-791, Vol. 4, 1-795, Vol. 4, 1-799, Vol. 4, 1-807, Vol. 4, 1-815, Vol. 4, 1-823
NT6X20
card replacement procedures Vol. 4, 1-827, Vol. 4, 1-831, Vol. 4, 1-835, Vol. 4, 1-839, Vol. 4, 1-847, Vol. 4, 1-855, Vol. 4, 1-863
NT6X21
card replacement procedures Vol. 4, 1-867, Vol. 4, 1-871, Vol. 4, 1-875, Vol. 4, 1-883, Vol. 4, 1-893, Vol. 4, 1-902, Vol. 4, 1-911, Vol. 4, 1-920
NT6X27
card replacement procedures Vol. 4, 1-924, Vol. 4, 1-931, Vol. 4, 1-938
NT6X30
card replacement procedures Vol. 4, 1-945, Vol. 4, 1-960, Vol. 4, 1-974, Vol. 4, 1-988, Vol. 4, 1-1002
NT6X36
card replacement procedures Vol. 4, 1-1021, Vol. 4, 1-1031, Vol. 4, 1-1036
NT6X40
card replacement procedures Vol. 5, 1-2, Vol. 5, 1-14, Vol. 5, 1-26
NT6X41
card replacement procedures Vol. 5, 1-64, Vol. 5, 1-71, Vol. 5, 1-78, Vol. 5, 1-87, Vol. 5, 1-95
NT6X42
card replacement procedures Vol. 5, 1-101, Vol. 5, 1-107, Vol. 5, 1-114, Vol. 5, 1-122
NT6X44
card replacement procedures Vol. 5, 1-130, Vol. 5, 1-138, Vol. 5, 1-144, Vol. 5, 1-158
NT6X45
card replacement procedures Vol. 5, 1-166, Vol. 5, 1-172, Vol. 5, 1-178, Vol. 5, 1-184
NT6X47
card replacement procedures Vol. 5, 1-190, Vol. 5, 1-196, Vol. 5, 1-202
NT6X48
card replacement procedures Vol. 3, 8-72, Vol. 3, 8-82, Vol. 5, 1-208
NT6X50
card replacement procedures Vol. 5, 1-216, Vol. 5, 1-223, Vol. 5, 1-237, Vol. 5, 1-244, Vol. 5, 1-259, Vol. 5, 1-275
NT6X51
card replacement procedures Vol. 5, 1-291, Vol. 5, 1-298, Vol. 5, 1-305, Vol. 5, 1-312, Vol. 5, 1-324, Vol. 5, 1-332, Vol. 5, 1-339, Vol. 5, 1-347
NT6X52
card replacement procedures Vol. 5, 1-355, Vol. 5, 1-361, Vol. 5, 1-367, Vol. 5, 1-373, Vol. 5, 1-384, Vol. 5, 1-392, Vol. 5, 1-401, Vol. 5, 1-410
NT6X53
card replacement procedures Vol. 5, 1-418, Vol. 5, 1-425, Vol. 5, 1-432, Vol. 5, 1-444, Vol. 5, 1-460, Vol. 5, 1-469, Vol. 5, 1-478, Vol. 5, 1-487
NT6X54
card replacement procedures Vol. 5, 1-493, Vol. 5, 1-500, Vol. 5, 1-509, Vol. 5, 1-518, Vol. 5, 1-533, Vol. 5, 1-542, Vol. 5, 1-549, Vol. 5, 1-556
NT6X60
card replacement procedures Vol. 5, 1-565, Vol. 5, 1-572, Vol. 5, 1-579, Vol. 5, 1-587
NT6X69
card replacement procedures Vol. 5, 1-605, Vol. 5, 1-613, Vol. 5, 1-622, Vol. 5, 1-630, Vol. 5, 1-639, Vol. 5, 1-648, Vol. 5, 1-654, Vol. 5, 1-670, Vol. 5, 1-678
NT6X69 in TMS
card replacement procedures Vol. 3, 4-19
NT6X71
card replacement procedures Vol. 5, 1-684, Vol. 5, 1-688, Vol. 5, 1-692, Vol. 5, 1-696, Vol. 5, 1-705, Vol. 5, 1-713, Vol. 5, 1-721
NT6X72
card replacement procedures Vol. 5, 1-725
NT6X73
card replacement procedures Vol. 5, 1-734, Vol. 5, 1-738, Vol. 5, 1-742, Vol. 5, 1-751

NT6X74
card replacement procedures Vol. 5, 1-755, Vol. 5, 1-761, Vol. 5, 1-775, Vol. 5, 1-782, Vol. 5, 1-790, Vol. 5, 1-799, Vol. 5, 1-808
NT6X75
card replacement procedures Vol. 5, 1-817, Vol. 5, 1-824, Vol. 5, 1-831, Vol. 5, 1-838
NT6X76
card replacement procedures Vol. 5, 1-845, Vol. 5, 1-853, Vol. 5, 1-861, Vol. 5, 1-869
NT6X78
card replacement procedures Vol. 5, 1-876, Vol. 5, 1-883, Vol. 5, 1-891, Vol. 5, 1-898, Vol. 5, 1-905, Vol. 5, 1-912, Vol. 5, 1-919, Vol. 5, 1-925, Vol. 5, 1-932, Vol. 5, 1-946
NT6X80
card replacement procedures Vol. 5, 1-951, Vol. 5, 1-957, Vol. 5, 1-964, Vol. 5, 1-972, Vol. 5, 1-981
NT6X85
card replacement procedures Vol. 6, 1-2, Vol. 6, 1-13, Vol. 6, 1-24
NT6X86
card replacement procedures Vol. 6, 1-30, Vol. 6, 1-39
NT6X87
card replacement procedures Vol. 6, 1-48, Vol. 6, 1-56
NT6X92
card replacement procedures Vol. 6, 1-64, Vol. 6, 1-71, Vol. 6, 1-79, Vol. 6, 1-87, Vol. 6, 1-95, Vol. 6, 1-104, Vol. 6, 1-112, Vol. 6, 1-118, Vol. 6, 1-125, Vol. 6, 1-140, Vol. 6, 1-243
NT6X99
card replacement procedures Vol. 6, 1-146, Vol. 6, 1-150, Vol. 6, 1-154, Vol. 6, 1-158, Vol. 6, 1-162, Vol. 6, 1-170, Vol. 6, 1-178, Vol. 6, 1-186
NT6Xseries in TMS
card replacement procedures Vol. 3, 4-17
NT7X05
card replacement procedures Vol. 6, 1-190, Vol. 6, 1-198, Vol. 6, 1-207, Vol. 6, 1-234, Vol. 6, 1-252
NT8X02
card replacement procedures Vol. 6, 1-261, Vol. 6, 1-265
NT8X18
card replacement procedures Vol. 6, 1-270
NTAX74
card replacement procedures Vol. 6, 1-281, Vol. 6, 1-292, Vol. 6, 1-303, Vol. 6, 1-315, Vol. 6, 1-327, Vol. 6, 1-337, Vol. 6, 1-347
NTAX78
card replacement procedures Vol. 6, 1-355, Vol. 6, 1-362, Vol. 6, 1-369
NTBX01
card replacement procedures Vol. 6, 1-374, Vol. 6, 1-381, Vol. 6, 1-390, Vol. 6, 1-399, Vol. 6, 1-408, Vol. 6, 1-417, Vol. 6, 1-423, Vol. 6, 1-430, Vol. 6, 1-437
NTBX01 in TMS
card replacement procedures Vol. 3, 4-30
NTBX02
card replacement procedures Vol. 6, 1-443, Vol. 6, 1-456, Vol. 6, 1-469, Vol. 6, 1-482, Vol. 6, 1-495, Vol. 6, 1-508, Vol. 6, 1-515, Vol. 6, 1-523
NTBX02 in TMS
card replacement procedures Vol. 3, 4-37
NTBX26
card replacement procedures Vol. 6, 1-538, Vol. 6, 1-546, Vol. 6, 1-554
NTBX27
card replacement procedures Vol. 6, 1-562, Vol. 6, 1-570, Vol. 6, 1-578, Vol. 6, 1-586
NTBX34
card replacement procedures Vol. 6, 1-593, Vol. 6, 1-601, Vol. 6, 1-611, Vol. 6, 1-621
NTBX35
card replacement procedures Vol. 6, 1-630, Vol. 6, 1-638, Vol. 6, 1-648, Vol. 6, 1-658
NTBX36
card replacement procedures Vol. 6, 1-667, Vol. 6, 1-677, Vol. 6, 1-687
NTBX72
card replacement procedures Vol. 6, 1-697, Vol. 6, 1-706, Vol. 6, 1-715, Vol. 6, 1-724

NTEX17
card replacement procedures Vol. 6, 1-733, Vol. 6, 1-743, Vol. 6, 1-753, Vol. 6, 1-763, Vol. 6, 1-773
NTEX54
card replacement procedures Vol. 6, 1-783, Vol. 6, 1-800, Vol. 6, 1-817, Vol. 6, 1-834, Vol. 6, 1-851
NTMX45
card replacement procedures Vol. 6, 1-898
NTMX71
card replacement procedures Vol. 6, 1-908, Vol. 6, 1-916, Vol. 6, 1-924, Vol. 6, 1-932, Vol. 6, 1-940
NTMX71, Back plane cards in an XPM
Vol. 3, 8-19
NTMX72
card replacement procedures Vol. 6, 1-949, Vol. 6, 1-957, Vol. 6, 1-966, Vol. 6, 1-975, Vol. 6, 1-984, Vol. 6, 1-993, Vol. 6, 1-1002
NTMX73
card replacement procedures Vol. 7, 1-9, Vol. 7, 1-17, Vol. 7, 1-26, Vol. 7, 1-36, Vol. 7, 1-45, Vol. 7, 1-54
card replacment procedures Vol. 7, 1-2
NTMX74
card replacement procedures Vol. 7, 1-60, Vol. 7, 1-69, Vol. 7, 1-77, Vol. 7, 1-86, Vol. 7, 1-95, Vol. 7, 1-104
NTMX75
card replacement procedures Vol. 7, 1-113, Vol. 7, 1-120, Vol. 7, 1-128, Vol. 7, 1-136, Vol. 7, 1-144, Vol. 7, 1-153, Vol. 7, 1-162
NTMX76
card replacement procedures Vol. 7, 1-168, Vol. 7, 1-175, Vol. 7, 1-182, Vol. 7, 1-188, Vol. 7, 1-195, Vol. 7, 1-205, Vol. 7, 1-214
NTMX77
card replacement procedures Vol. 7, 1-221, Vol. 7, 1-234, Vol. 7, 1-241, Vol. 7, 1-254, Vol. 7, 1-267, Vol. 7, 1-280, Vol. 7, 1-293, Vol. 7, 1-306, Vol. 7, 1-318
NTMX77 in TMS
card replacement procedures Vol. 3, 4-48
NTMX79
card replacement procedures Vol. 7, 1-333, Vol. 7, 1-343, Vol. 7, 1-349, Vol. 7, 1-359, Vol. 7, 1-370, Vol. 7, 1-380, Vol. 7, 1-390
NTMX81
card replacement procedures Vol. 7, 1-397, Vol. 7, 1-409, Vol. 7, 1-421, Vol. 7, 1-435, Vol. 7, 1-451, Vol. 7, 1-592
NTMX82
card replacement procedures Vol. 7, 1-465, Vol. 7, 1-476, Vol. 7, 1-486, Vol. 7, 1-496
NTMX87
card replacement procedures Vol. 7, 1-508, Vol. 7, 1-528, Vol. 7, 1-548, Vol. 7, 1-571
NTNX62 in TPC
card replacement procedures Vol. 3, 5-7
NTNX63 in TPC
card replacement procedures Vol. 3, 5-12
NTNX64 in TPC
card replacement procedures Vol. 3, 5-17
NTNX65 in TPC
card replacement procedures Vol. 3, 5-22
NTNX66 in TPC
card replacement procedures Vol. 3, 5-27
NTNX68 in TPC
card replacement procedures Vol. 3, 5-33
NTOM36 keyboard
card replacement procedures Vol. 3, 5-40
NTOM90 in MP
card replacement procedures Vol. 3, 5-45
NTOM92 in MP
card replacement procedures Vol. 3, 5-52
NTRX41
card replacement procedures Vol. 7, 1-630, Vol. 7, 1-635, Vol. 7, 1-640, Vol. 7, 1-650, Vol. 7, 1-655
NTRX42
card replacement procedures Vol. 7, 1-660, Vol. 7, 1-677, Vol. 7, 1-695, Vol. 7, 1-726, Vol. 7, 1-746, Vol. 7, 1-766
NTRX43
card replacement procedures Vol. 7, 1-778, Vol. 7, 1-785, Vol. 7, 1-792, Vol. 7, 1-808, Vol. 7, 1-816
NTRX44
card replacement procedures Vol. 7, 1-824, Vol. 7, 1-836, Vol. 7, 1-858

NTRX54
card replacement procedures Vol. 7, 1-868, Vol. 7, 1-882, Vol. 7, 1-889
NTRX66
card replacement procedures Vol. 7, 1-896
NTTR46
card replacement procedures Vol. 7, 1-902
NTTR47
card replacement procedures Vol. 7, 1-908
NTTR60
card replacement procedures Vol. 7, 1-914
NTTR66
card replacement procedures Vol. 7, 1-921
NTTR67
card replacement procedures Vol. 7, 1-927
NTTR70
card replacement procedures Vol. 7, 1-934
NTTR71
card replacement procedures Vol. 7, 1-941
NTTR72
card replacement procedures Vol. 7, 1-946
NTTR73
card replacement procedures Vol. 7, 1-952
NTTR74
card replacement procedures Vol. 7, 1-956
NTTR75
card replacement procedures Vol. 7, 1-962
NTTR76
card replacement procedures Vol. 7, 1-970
NTTR77
card replacement procedures Vol. 7, 1-979
NTTR87
card replacement procedures Vol. 7, 1-986

P

placing MP in service (integrated)
card replacement common procedures Vol. 3, 5-57
placing MP in service (standalone)
card replacement common procedures Vol. 3, 9-145

R

removing MP from service (integrated)
card replacement common procedures Vol. 3, 5-62
removing MP from service (standalone)
card replacement common procedures Vol. 3, 9-150
returning cards Vol. 3, 9-184

S

shelf layouts
application processor cabinet
APC cabinet layout Vol. 1, 7-3
file processor shelf Vol. 1, 7-4
storage device shelf Vol. 1, 7-5
common peripheral controller equipment frame
CPCE frame layout Vol. 3, 8-4
DTC with 2 NT6X45's Vol. 3, 8-8
international XPMs with 2 NT6X45's Vol. 3, 8-14
international XPMs with 3 NT6X45's Vol. 3, 8-15
international XPMs with NTMX77 Vol. 3, 8-13
ISDN XPMs with 2 NT6X45's Vol. 3, 8-12
ISDN XPMs with NTMX77 Vol. 3, 8-11
LGC with 2 NT6X45's Vol. 3, 8-9
LGC with NTMX77 Vol. 3, 8-6
LTC with 2 NT6X45's Vol. 3, 8-10
LTC with NTMX77 Vol. 3, 8-7
PCM30 XPMs with 2 NT6X45's Vol. 3, 8-18
PCM30 XPMs with NTMX77 Vol. 3, 8-16, Vol. 3, 8-17
dual plane combined core cabinet
DPCC cabinet layout Vol. 2, 6-3, Vol. 3, 3-3
SuperNode message switch shelf Vol. 2, 6-4
SuperNode system load module shelf Vol. 3, 3-4
enhanced link peripheral processor
ELPP cabinet layout Vol. 1, 5-4
link interface module showing LMS units Vol. 1, 5-6
link interface shelf common fill Vol. 1, 5-7
link interface shelf for DLIUs Vol. 1, 5-8
triple F-bus configuration in ELPP cabinet Vol. 1, 5-5
enhanced multipurpose cabinet
EMC cabinet layout Vol. 3, 2-4
single shelf link peripheral processor, 2-slot ASUs Vol. 3, 2-6
single shelf link peripheral processor, ASU common fill Vol. 3, 2-5

fiber link peripheral processor (SuperNode)
link interface module showing LMS units Vol. 2, 3-6
host ISDN XPMs Vol. 3, 8-3
host XPMs Vol. 3, 8-3
input/output equipment frame
dual disk drive unit shelf Vol. 1, 9-7, Vol. 1, 9-8, Vol. 1, 9-9
input/output controller shelf Vol. 1, 9-5
IOE frame layout Vol. 1, 9-4, Vol. 3, 1-3
remote oscillator shelf Vol. 3, 1-4
single disk drive unit shelf Vol. 1, 9-6
ISDN XPMs (host) Vol. 3, 8-3
line concentrating equipment frame
enhanced line concentrating module Vol. 2, 1-9
ISDN LCE frame layout Vol. 2, 1-5
ISDN line concentrating equipment frame Vol. 2, 1-3, Vol. 3, 7-3
LCE frame layout Vol. 2, 1-4, Vol. 3, 7-3
LCM line drawer Vol. 2, 1-7
LCME line drawer Vol. 2, 1-10
LCMI line drawer (international) Vol. 2, 1-8
line concentrating module Vol. 2, 1-6, Vol. 3, 7-4
line module equipment frame
line drawer layout (metal) Vol. 2, 2-8, Vol. 2, 11-8
line drawer layout (plastic) Vol. 2, 2-7, Vol. 2, 11-7
line drawer shelf Vol. 2, 2-6, Vol. 2, 11-6
line module controller Vol. 2, 2-5, Vol. 2, 11-5
LME frame layout Vol. 2, 11-4
link peripheral processor (SuperNode)
application processor unit Vol. 2, 3-8
CCS7 link interface unit (2-slot, channelized) Vol. 2, 3-8
CCS7 link interface unit (2-slot, non-channelized) Vol. 2, 3-8
Ethernet interface unit (2-slot) Vol. 2, 3-8
frame relay interface unit Vol. 2, 3-8
link interface module showing LMS units Vol. 2, 3-5
link interface shelf common fill, 2-slot ASUs Vol. 2, 3-7
link interface shelf for 2-slot ASUs Vol. 2, 3-8
LPP cabinet layout Vol. 2, 3-4
network interface unit Vol. 2, 3-8
voice processor unit Vol. 2, 3-8
X.25 link interface unit Vol. 2, 3-8
message switch and buffer equipment frame
CCS6 signaling terminal array Vol. 2, 8-8
CCS6 signaling terminal controller array Vol. 2, 8-9
CCS7 signaling terminal array Vol. 2, 8-11
CCS7 signaling terminal group Vol. 2, 8-10
MS6E frame layout Vol. 2, 8-4
MS7E frame layout Vol. 2, 8-6
ST6E frame layout Vol. 2, 8-5
ST7E frame layout Vol. 2, 8-7
network equipment frames
ENET 128K frame layout Vol. 2, 9-8
ENET 64K frame layout Vol. 2, 9-7
ENET shelf Vol. 2, 9-14
NT0X48 NET crosspoint shelf Vol. 2, 9-10
NT0X48 NET frame layout Vol. 2, 9-4
NT0X48 NET interface shelf Vol. 2, 9-9
NT5X13 NETC crosspoint shelf Vol. 2, 9-12
NT5X13 NETC frame layout Vol. 2, 9-5
NT5X13 NETC interface shelf Vol. 2, 9-11
NT8X11 DSN frame layout Vol. 2, 9-6
NX8X11 DSN shelf Vol. 2, 9-13
office alarm unit Vol. 2, 10-3
single core cabinet
enhanced network and interface shelf Vol. 1, 6-5, Vol. 1, 6-6
SCC cabinet layout Vol. 1, 3-3, Vol. 1, 6-3, Vol. 2, 4-3, Vol. 2, 7-3
SuperNode SE computing module/system load module Vol. 1, 3-4
SuperNode SE link interface shelf, 2-slot ASUs Vol. 2, 4-5
SuperNode SE link interface shelf, ASU common fill Vol. 2, 4-4
SuperNode SE message switch shelf Vol. 2, 7-4
SuperNode SE 16K ENET Vol. 1, 6-5
SuperNode SE 16k ENET Vol. 1, 6-3
SuperNode SE 32k Vol. 1, 6-4
trunk module equipment frame
digital recorded announcement machine with NT0X70 processor Vol. 3, 6-9
digital recorded announcement machine with NT4X65 processor Vol. 3, 6-10
integrated service module with NTFX42 processor Vol. 3, 6-12
integrated service module with single-card PMs Vol. 3, 6-13

maintenance trunk module with NT0X70 processor Vol. 3, 6-7
maintenance trunk module with NT4X65 processor Vol. 3, 6-8
office alarm unit with NT0X70 processor Vol. 2, 10-5
office alarm unit with NT4X65 processor Vol. 2, 10-6
service trunk module Vol. 3, 6-11
TME frame layout Vol. 2, 10-4, Vol. 3, 6-4
trunk module with NT0X70 processor Vol. 3, 6-5
trunk module with NT4X65 processor Vol. 3, 6-6
XPMs (host) Vol. 3, 8-3
Star Remote System
Star Module
C-side links mapping
illustrated Vol. 7, 1-459, Vol. 7, 1-993

T

TMS shelf layouts
card replacement common procedures
Vol. 3, 4-2

DMS-100 Family

North American DMS-100

Card Replacement Procedures

Volume 4 of 7

Product Documentation - Dept. 3423
Nortel Networks
P.O. Box 13010
RTP, NC 27709-3010
Telephone: 1-877-662-5669
email: cits@nortelnetworks.com

Copyright © 1996-2001 Nortel Networks,
All Rights Reserved

NORTEL NETWORKS CONFIDENTIAL: The information contained herein is the property of Nortel Networks and is strictly confidential. Except as expressly authorized in writing by Nortel Networks, the holder shall keep all information contained herein confidential, shall disclose the information only to its employees with a need to know, and shall protect the information, in whole or in part, from disclosure and dissemination to third parties with the same degree of care it uses to protect its own confidential information, but with no less than reasonable care. Except as expressly authorized in writing by Nortel Networks, the holder is granted no rights to use the information contained herein.

Information is subject to change without notice. Nortel Networks reserves the right to make changes in design or components as progress in engineering and manufacturing may warrant. Changes or modification to the DMS-100 without the express consent of Nortel Networks may void its warranty and void the user's authority to operate the equipment.

Nortel Networks, the Nortel Networks logo, the Globemark, How the World Shares Ideas, Unified Networks, DMS, DMS-100, Helmsman, MAP, Meridian, Nortel, Northern Telecom, NT, Supernode, and TOPS are trademarks of Nortel Networks.

Publication number: 297-8021-547
Product release: LET0015 and up
Document release: Standard 14.02
Date: May 2001
Printed in the United States of America

NORTEL NETWORKS™