Critical Release Notice

Publication number: 297-2621-851
Publication release: Standard 15.01

Attention!

****

The UCS DMS-250 Data Schema Reference Manual, 297-2621-851, will continue to be updated and provided in the North America - DMS NTP collection.

****

The content of this customer NTP supports the SN09 (DMS) software release.

Bookmarks used in this NTP highlight the changes between the UCS15 baseline and the SN09 (DMS) release. The bookmarks provided are color-coded to identify release-specific content changes. NTP volumes that do not contain bookmarks indicate that the UCS15 baseline remains unchanged and is valid through the SN09 (DMS) release.

Bookmark Color Legend

Black: Applies to content for the UCS15 baseline that is valid through the current release.

Red: Applies to new or modified content for UCS17 that is valid through the current release.

Blue: Applies to new or modified content for UCS18 (SN05 DMS) that is valid through the current release.

Green: Applies to new or modified content for SN06 (DMS) that is valid through the current release.

Purple : Applies to new or modified content for SN07 (DMS) that is valid through the current release.

Pink: Applies to new or modified content for the SN08 (DMS) that is valid through the current release.

Orange: Applies to new or modified content for the SN09 (DMS) that is valid through the current release.

Attention!

Adobe ® Acrobat ® Reader ™ 5.0 or higher is required to view bookmarks in color.

Publication History

***Note**: Refer to the UCS15 baseline document for Publication History prior to the UCS17 software release.*

November 2005

Standard NTP release 15.01 for the SN09 (DMS) software release.

Volume1
ANNMEMS (modified – A00009013)
ANNPHLST (modified – A00009013)

An additional documentation issue was made in October 2005 for the SN07 (DMS) software release. Refer to "Standard NTP release 13.02 for software release SN07 (DMS)".

June 2005

Standard NTP release 14.02 for the SN08 (DMS) software release.

The following Data Schema content is updated for the SN08 (DMS) release. Content provided in this NTP is not superseded by content provided in the replacement NTP as indicated for the Preliminary release.

Volume1
AMAOPTS (new – A00007752)

Volume2
CDRTMPLT (modified – A00007752)

March 2005

Preliminary NTP release 14.01 for the SN08 (DMS) software release.

The following updated Data Schema content is provided in the Carrier VoIP Operational Configuration: Data Schema Reference NTP, NN10324-509. The content provided in NTP 297-2621-851 is superseded by the content provided in NTP NN10324-509.

ACDMISPL
CGBLDADD
CGBLDDGL
CGBLDDIG
CGBLDNI
CGBLDPI
CGPNBLDR
CUSTSTN_OPTION_DBO
EDAS

IBNLINES
ISERVOPT
KSETINV
TLDSIAMAOPTS
TRKSGRP_TYPE_C7UP

The following new Data Schema content is provided in the Carrier VoIP Operational Configuration: Data Schema Reference NTP, NN10324-509. This content will not be provided in NTP 297-2621-851.

CGBLDSIN
LOGTHROT
NTPOLL

October 2005

Standard release 13.02 for software release SN07 (DMS). Updates made for this release are shown below.

Volume 1
BEARNETS (new – CR Q01083765)

Volume 2
DESDATA (new – CR Q01083765)

Volume 3
NET2NET (new – CR Q01083765)
NETBRDGE (new – CR Q01083765)
NETPATH (new – CR Q01083765)

Volume 4
PRSUDATA (new – CR Q01083765)
SELDEFS (new – CR Q01083765)
SETDEFS (new – CR Q01083765)

December 2004

Standard release 13.01 for software release SN07 (DMS). Updates made for this release are shown below.

Volume 1
CAINPARM - Added parameter STANDARD_ANISCREEN_RULES per CR Q00909834-01
CAINRESP - Added parameter AMABUSCUSTID per feature A00005363
CAINREXT - Added context identifier 300 to field AMA_DIGS_TYPE as per A00005363
Volume 2
CDRTMPLT - Added additional parameters to FIELD per feature A00005363

September 2004

Standard release 12.04. This release is current for the SN07 (DMS) software release,

although no changes have been made for SN07 (DMS) features.

Volume 1
CAINPARM - Added parameter TRTMTCD_COMPCODE_ZAPPED_ZERO per CRQ00816405

Volume 5
TMTMAP (amended for CR Q00760514-10)

March 2004

Standard release 12.03 for software release SN06 (DMS)

Volume 3
LTDATA
Volume 4
SUSHELF

September 2003

Standard release 12.02 for software release SN06 (DMS). Updates made for this release are shown below.

Volume 1
CAINPARM

Volume 2
DRMUSERS – this table is obsolete. The description has been removed.
DSLIMIT
IBNRTE selector CND

Volume 3
OFRT selector CND

Volume 4
STDPRTCT.STDPRT

Volume 5
TONES

June 2003

Preliminary release 12.01 for software release SN06 (DMS). Updates made for this release are shown below.

Volume 1
ACRTE

Volume 2
DNRTE
IBNRTE selector CND

Volume 3
OFRT selector CND

Volume 4
No changes

Volume 5
TRKOPTS, TRKSGRP

This page is intentionally blank.

297-2621-851

Digital Switching Systems

UCS DMS-250

Data Schema Reference Manual Volume 5 of 5

UCS15 Standard 09.02 June 2001

NORTEL NETWORKS
How the world shares ideas.

Digital Switching Systems

UCS DMS-250

Data Schema Reference Manual Volume 5 of 5

Publication number: 297-2621-851
Product release: UCS15
Document release: Standard 09.02
Date: June 2001

Copyright © 1998-2001 Nortel Networks,
All Rights Reserved

United States of America

NORTEL NETWORKS CONFIDENTIAL: The information contained herein is the property of Nortel Networks and is strictly confidential. Except as expressly authorized in writing by Nortel Networks, the holder shall keep all information contained herein confidential, shall disclose the information only to its employees with a need to know, and shall protect the information, in whole or in part, from disclosure and dissemination to third parties with the same degree of care it uses to protect its own confidential information, but with no less than reasonable care. Except as expressly authorized in writing by Nortel Networks, the holder is granted no rights to use the information contained herein.

Nortel Networks, the Nortel Networks logo, the Globemark, How the World Shares Ideas, and Unified Networks are trademarks of Nortel Networks.

Contents

1 UCS data schema 1-1

SYNCLK 1-2
SYNOGLNK 1-21
SVRCKT 1-27
SYSDATA 1-31
TABLES 1-36
TABMON 1-37
TANDMRTE 1-39
TAPIDTAB 1-42
TCAPANNC 1-44
TCAPTRID 1-48
TCNFAST 1-52
TCNTCH 1-57
TERMDEV 1-58
TERMLRN 1-67
TERMATT 1-69
TERMRTE 1-74
TFANINT 1-79
TIMEODAY 1-84
TMINV 1-92
TKCVDATA 1-110
TMTCNTL 1-125
TMTMAP 1-179
TODHEAD 1-204
TOFCNAME 1-215
TOLLFREE 1-221
TONES 1-223
TR533CIC 1-229
TRK4CIC 1-233
TRKCOS 1-236
TRKFEAT 1-238
TRKGRP 1-239
TRKGRP1 1-255
TRKGRP (ATR trunk group type) 1-267
TRKGRP (C101 trunk group type) 1-270
TRKGRP.CAMA 1-276
TRKGRP type DS0 1-286
TRKGRP (DAL trunk group type) 1-289
TRKSGRP type DS0TL 1-312

TRKGRP type E911 1-314
TRKGRP (EANT trunk group type) 1-319
TRKGRP (EDAL trunk group type) 1-344
TRKGRP (IMT trunk group type) 1-354
TRKGRP type INT101 1-379
TRKGRP (IT trunk group type) 1-386
TRKGRP type ITL2 1-393
TRKGRP.IT250 1-396
TRKGRP type ITOPS 1-399
TRKGRP type LOOPA 1-410
TRKGRP type MAINT 1-414
TRKGRP type MTR 1-429
TRKGRP (ONAL trunk group type) 1-454
TRKGRP type SOCKT 1-472
TRKGRP (ONAT trunk group type) 1-475
TRKGRP (PRA250 trunk group type) 1-493
TRKGRP type ROTL 1-512
TRKGRP type T101 1-516
TRKGRP (R2 trunk group type) 1-522
TRKGRP type T2 1-531
TRKGRP type TI 1-540
TRKGRP type TL 1-547
TRKGRP type TO 1-549
TRKGRP type TOPS 1-554
TRKGRP type TTL2 1-617
TRKGRP (T105 trunk group type) 1-621
TRKGRP (T250 trunk group type) 1-625
TRKMEM 1-630
TRKMTCE 1-662
TRKNAME 1-672
TRKOPTS 1-674
TRKSGRP 1-719
TRKSGRP 1-760
TRKSGRP type FST 1-781
TRKSGRP type TUP 1-792
TRKSIG 1-805
TRKSIG (Supplement for Spectrum) 1-806
TRTMTACT 1-812
TSTLCONT 1-815
TSTXCON 1-816
TTL4 1-819
TYP2PRTM 1-821
UIFNDBS 1-823
UIFNGSC 1-825
UNIPROF 1-827
UNRESDAT 1-833
UNRESDAY 1-835
UNRESTIM 1-837
VAMPTRID 1-839
VARCLI.CLIDATA 1-843
VERSIONS 1-845

VARCLI 1-847
VPNFGD 1-849
VRINV 1-851
VPROMPTS 1-855
VCHIDTAB 1-859
XAFWLOAD 1-862
XFERADDR 1-865
XFERSSYS 1-868
XLAPLAN 1-871
XPMLFP 1-875
WZONE 1-877
ZZY2NPA 1-878

1 UCS data schema

This document describes the data tables for a particular software load on the UCS DMS-250 switch.

This document assists the customer in preparing office-dependent data for the switch. The office-dependent data is stored in data store tables that are used in conjunction with software programs and systems circuits to advance a call through the stages of call processing.

This document consists of three volumes, and each volume is arranged alphabetically by table name.

SYNCLK

Table name

Synchronous Clock Table

Functional description

Switches arranged for synchronous clock operation require table SYNCLK. You can enter data in this table for the DMS-100 switch (NT40) or the DMS-SuperNode switch.

DMS-100

Switches with synchronous clocks can be one of the following types of switches:

- A master external switch in which the central message controller (CMC) clocks synchronizes with an external reference clock.
- A master internal switch that uses the free running oscillator in the synchronizable master clock oscillator (NT3X15AA or NT3X16AA) as the network master clock.
- A slave switch that synchronizes to a master or another slave above the slave in the network hierarchy. This process occurs through clock signals on one of the two assigned DS-1 timing links.

Table SYNCLK allows the user to specify the location of the clock and the timing links. The clock and timing links are for the following peripheral module (PM) types:

- digital carrier module (DCM)
- digital trunk controller (DTC)
- line trunk controller (LTC)

The Stratum-3 and STRAT2P5 clocks (PEC NT3X15) are always on the same shelf as the central control (CC). The system supplies the default values for fields FRTYPE, FRNO, SHPOS, FLOOR, ROW, and FRPOS. The system supplies and ignores these fields.

The Stratum-2 clock (NT3X16) cannot reside on the CC shelf. The Stratum-2 clock can be on an input/output equipment (IOE) frame. This frame must be maximum of 200 feet away from the central message controller (CMC). Overwrite the default values for fields FRTYPE, FRNO, SHPOS, FLOOR, ROW, and FRPOS to reflect the true position of the clock.

The contents of the phase register field do not affect the DCM. For LTCs and DTCs, the phase register field must select the specified register on the time

switch card. This time switch card is hard-wired to the port. This configuration provides the timing link data.

DMS SuperNode

The synchronous clock system handles different office configurations. The synchronous clock system allows the DMS to be a node in the timing network.

In the master external office configuration, the message switch (MS) connects to an external reference source, like a Cesium. This connection synchronizes the DMS system clock. Offices at the top of the network hierarchy use this configuration. Dedicated links that connect to the DMS-bus clock paddleboard (NT9X54) synchronize the DMS clock.

The master internal office configuration uses the internal clock of the DMS to synchronize the office. Offices at the top of the hierarchy and non-Stratum-1 quality use this configuration.

Configuration of the Signaling Transfer Point (STP) offices must occur in the Master Internal Stratum 3 configuration.

The slave office configuration does not have dedicated links incoming to the office to supply the required timing. The system extracts the clock reference source from the incoming digital trunks. To select the digital trunks that the system can use as timing links, enter data in table SYNCLK. You can select two trunks as timing links.

The two trunks that the system uses as timing links do not have limits. The two trunks do not have limits if the following conditions apply:

- the trunks are digital trunks
- the trunks are not on the same DCM
- the trunks are not on the same circuit card if the trunks are on the same DTC or LTC
- the circuit numbers for PMs have a limit of 0 for card 0, and 2 for card 1
- the MS contains the system clocks. Each MS has one clock

Table SYNCLK allows the switch to synchronize the Stratum-3 system clock to the remote Stratum-2 or 2.5 clock. A remote clock contains a Stratum-2 or 2.5 quality oscillator in the NT3X95 remote oscillator shelf.

The DMS uses the slave office configuration to synchronize to another office. For the slave office configuration, the system extracts the synchronization reference from an incoming DS-1 timing link.

SYNCLK (continued)

SPM OC-3

Spectrum Peripheral Module (SPM) optical carrier-level 3 (OC-3) can be provisioned as a timing link when an office is configured in slave mode.

In table SYNCLK, field OFFCONF must be datafilled as SLAVE. This datafill enables selection of SPM as a timing link in field LK0_PTYP or LK1_PTYP.

Field LK0_PNUM or LK1_PNUM can be datafilled only with existing SPMs defined in table MNNODE. If the requested SPM is not datafilled in table MNNODE, the datafill is rejected and the following message displays: “SPM XX is undefined.” Also, SPMs to be datafilled must be configured in internal timing mode in table MNNODE. Failure to configure the SPM in internal timing mode in table MNNODE results in the datafill being blocked and the following message displays: “SPM XX is not in INTERNAL mode.”

Fields LK0_PNUM and LK0_RMTYP or LK1_PNUM and LK1_RMTYP combine to form the timing link identifier for an SPM. This translates to a circuit pack on the SPM, which must be defined in table MNCKTPAK prior to the datafill in table SYNCLK. If the circuit pack is not defined correctly, the datafill is rejected and the following message displays: “No OC3 RMs found on SPM XX.” In addition, if the state of the SPM is anything but INSV, the following warning is displayed: “SPM XX is NOT INSV.”

The following list describes additional restrictions imposed in table SYNCLK for OC-3 line timing:

- Stratum 2 and Stratum 2.5 configurations are not supported. An attempt to provision OC-3 as a timing link with Stratum 2 or Stratum 2.5 configurations results in the following message: “SLAVE office with SPM as sync source. Office should be datafilled with STRAT3 clock.”
- A combination of SPM and other PMs as LINK0 and LINK1 is not allowed. An attempt to establish this combination results in the following message: “SPM timing links cannot be provisioned with other PTYP.”

SPMs currently datafilled in table SYNCLK cannot be deleted from table MNNODE without first being removed from table SYNCLK. If the SPMs are not removed from table SYNCLK first, the deletion from table MNNODE is blocked and the following warning displays: “SPM XX is provisioned as Link X in table SYNCLK.” (“Link X” represents LK0 when X=0 and LK1 when X=1. “SPM XX” corresponds to the SPM number being datafilled. XX can have integer values from 0 to 63.)

Datafill sequence and meaning

Enter data in the following tables before you enter data in table SYNCLK.

- LTCINV
- LTCPSINV
- DCMINV
- SYNOGLNK, if the load includes this table
- MNNODE, when provisioning SPM OC-3 as a timing link
- MNCKTPAK, when provisioning SPM OC-3 as a timing link

Table size

The system allocates memory for one default tuple.

Datafill

Datafill for table SYNCLK appears in the following tables.

Fields descriptions for the DMS-100 switch start on the first page of this document.

Field descriptions for the DMS SuperNode switch start in the table below.

Field descriptions for DMS-100 switch

Field names, subfield names, and correct data ranges for table SYNCLK for DMS-100 switches appear in the following table.

Field descriptions (Sheet 1 of 7)

Field	Subfield or refinement	Entry	Description
KEY		0	*Key*. Enter the index 0 in the synchronous clock table. Entries outside the range indicated for this field are not correct.

SYNCLK (continued)

Field descriptions (Sheet 2 of 7)

Field	Subfield or refinement	Entry	Description
OFFCONF		MASTER_ EXT, MASTER_ INT, NON_SYNC, or SLAVE	*Office configuration.* Define the office configuration. Enter MASTER_EXT if the switching unit is configured as a master with an external reference clock. Enter MASTER_INT if the switching unit is configured as a master with the internal clock as a standard. Enter NON_SYNC if the switching unit does not contain synchronous clock hardware. The system initializes field OFFCONF with a value of NON_SYNC. Enter SLAVE if the switching unit is configured as a slave office synchronized through DS-1 to a master switching unit.
CLK0DEF		NON_SYNC_ CLOCK or SYNC_ CLOCK	*Clock 0 definition.* Enter NON_SYNC_CLOCK if clock 0 is not a synchronous clock. Enter SYNC_CLOCK if clock 0 has synchronous clock hardware. The system initializes field CLK0DEF with a value of NON_SYNC_CLOCK.
CLK1DEF		NON_SYNC_ CLOCK or SYNC_ CLOCK	*Clock 1 definition.* Enter NON_SYNC_CLOCK if clock 1 is not a synchronous clock. Enter SYNC_CLOCK if clock 1 has synchronous clock hardware. The system initializes field CLK1DEF with a value of NON_SYNC_CLOCK.

SYNCLK (continued)

Field descriptions (Sheet 3 of 7)

Field	Subfield or refinement	Entry	Description
LK0PTYP		D30_ADTC_TYPE D30_DCA_TYPE D30_DCMT_TYPE D30_IDTC_TYPE D30_PDTC_TYPE D30_TDTC_TYPE D30_TLTC_TYPE DS1_DCM_TYPE DS1_DTC_TYPE DS1_DTCI_TYPE DS1_ICP_TYPE DS1_LTC_TYPE DS1_RMSC_TYPE or SPM	*Timing link zero peripheral module type*. Enter the peripheral module (PM) type assigned to timing link 0. Entry D30_DCA_TYPE is for licensee (K+S) use. Entries D30_TDTC_TYPE and D30_TLTC_TYPE are for licensee use. Entries outside the range indicated for this field are not correct.
LK0PNUM		0 to 511	*Timing link zero peripheral module number*. Enter the number of the PM assigned to timing link 0 in field LK0PTYP. The DTC or LTC PMs (peripheral modules) can have an assigned value from 0 to 63. SPM can have an assigned value from 0 to 63. Give PM DCM a value from 0 to 511.
LK0CCT		0 to 4	*Timing link zero circuit number*. Enter the circuit card number assigned to timing link 0. Assign DCM DS-1 ports links 0 to 4. The LTC, DTC, PDTC, ADTC, or IDTC can have DS-1 ports 0 and 2 assigned. The DCA (for K+S) can have DS-1 ports from 0 to 3 assigned. Entries outside the range indicated for this field are not correct.

SYNCLK (continued)

Field descriptions (Sheet 4 of 7)

Field	Subfield or refinement	Entry	Description
LK1PTYP		D30_ADTC_TYPE D30_DCA_TYPE D30_DCMT_TYPE D30_IDTC_TYPE D30_PDTC_TYPE D30_TDTC_TYPE D30_TLTC_TYPE DS1_DCM_TYPE DS1_DTC_TYPE DS1_DTCI_TYPE DS1_ICP_TYPE DS1_LTC_TYPE DS1_RMSC_TYPE or SPM	*Timing link one peripheral module type*. Enter the PM type that belongs to timing link 1. Entry D30_DCA_TYPE is for licensee (K+S) use. Entries D30_TDTC_TYPE and D30_TLTC_TYPE are for licensee use. Entries outside the range indicated for this field are not correct.
LK1PNUM		0 to 511	*Timing link one peripheral module number*. Enter the number of the PM assigned to timing link 1. If the entry in field LK1PTYP is a DCM type, the range is 0 to 511. The DTC or LTC PMs can have an assigned value from 0 to 63. SPM can have an assigned value from 0 to 63.
LK1CCT		0 to 4	*Timing link one circuit number*. Enter the circuit card number that belongs to timing link 1. If the entry in field LK1PTYP is a DCM type, the range is 0 to 4. The entry in field LK1PTYPE can be an ADTC, DTC, IDTC, LTC, or PDTC type. In this condition, the entry can have DS-1 ports 0 and 2 assigned for office synchronization. If the entry in field LK1PTYPE is a DCA type (for K+S), the entry can have DS-1 ports 0 to 3 assigned. Entries outside the range indicated for this field are not correct.

SYNCLK (continued)

Field descriptions (Sheet 5 of 7)

Field	Subfield or refinement	Entry	Description
MOFS		Y or N	*Master of slaves*. Enter Y if the switching unit is a master of slaves. If the switching unit is not the master of slaves, enter N. The system initializes field MOFS with a value of N.
BEAT		Y or N	*Beat detection*. Enter Y if the switching unit is a MASTER_EXT office (field OFFCONF). If the switching unit is not a MASTER_EXT office, enter N. The default value is Y.
FRTYPE		CCC or IOE	*Frame type*. If the entry in field CLOCKPEC, in the following Field descriptions table, is NT3X16, enter data in this refinement. Enter IOE (input/output equipment) or CCC (central control complex). The default for this field is CCC. Entries outside the range indicated for this field are not correct.
FRNO		0 to 511	*Frame number*. If the entry in field CLOCKPEC, in the following Field descriptions table, is NT3X16, enter data in this refinement. Enter the frame number that contains the clock card. The default for this field is 0.
SHPOS		0 to 77	*Shelf position*. If the entry in field CLOCKPEC, in the following Field descriptions table, is NT3X16, data enter this refinement. Enter the shelf position that contains the clock card. The default for this field is 43. Entries outside the range indicated for this field are not correct.

SYNCLK (continued)

Field descriptions (Sheet 6 of 7)

Field	Subfield or refinement	Entry	Description
FLOOR		0 to 99	*Floor*. If the entry in field CLOCKPEC, in the following Field descriptions table, is NT3X16, enter data in this refinement. Enter the floor position that contains the clock card. The default entry for this field is 0.
ROW		A to Z, AA to ZZ, except I, II, O, and OO	*Row*. If the entry in field CLOCKPEC, in the following Field descriptions table, is NT3X16, enter data in this refinement. Enter the row on the floor that contains the clock card. The default entry for this field is A.
FRPOS		0 to 99	*Frame position*. If the entry in field CLOCKPEC, in the following Field descriptions table, is NT3X16, enter data in this refinement. Enter the frame position of the bay that contains the clock card. The default entry for this field is 0.
CLOCKPEC		NT3X15 or NT3X16	*Clock product engineering code*. Enter the clock product engineering code (PEC). The PEC for the Stratum-2 clock is NT3X16. The other PECs, like Stratum-3, STRAT2P5) are NT3X15. See the “Additional information" section in this document for information for changes to the clock type.
LOWDRIFT		10 to 75	*Lower percent drift*. Enter the lower percent adjustment. This adjustment causes an alarm. The alarm indicates the sync clock oscillator is out of adjustment and needs readjustment. This value increases by 10, 11, 12.....75.

Field descriptions (Sheet 7 of 7)

Field	Subfield or refinement	Entry	Description
LALRMLVL		NO_ALARM MINOR MAJOR	*Lower alarm level*. Enter the alarm level the system raises. The system raises the alarm level when the sync clock oscillator reaches the percent adjustment that field LOWDRIFT specifies.
UALRMLVL		NO_ALARM MINOR MAJOR	*Upper alarm level*. Enter the alarm level the the system raises. The system raises the alarm level when the sync clock oscillator reaches the upper percent adjustment that the system defines. The alarm level for UALRMLVL must be greater than or equal to the LALRMLVL alarm level.

Field descriptions for DMS SuperNode switch

Field names, subfield names, and correct data ranges for table SYNCLK for DMS SuperNode switches appear in the following table.

Field descriptions (Sheet 1 of 3)

Field	Subfield or refinement	Entry	Description
CLKKEY		0	*Clock key*. Enter 0 (zero).
CLKDATA		see subfields	*Clock data*. This field contains subfield CLKTYPE and associated refinements.
	CLKTYPE	STRAT2 STRAT2P5 STRAT3	*Clock type*. Enter the type of clock used in the office. If the entry value is STRAT2 or STRAT2P5, enter data in refinements CLKPEC, FRTYPE, FRNO, SHPOS, FLOOR, ROW, and FRPOS. Enter STRAT3 for STP offices. If the entry value is STRAT3, see refinement OFFCDATA that follows. See the “Additional information" section in this document for information on changes to the clock type.

SYNCLK (continued)

Field descriptions (Sheet 2 of 3)

Field	Subfield or refinement	Entry	Description
	CLKPEC	NT3X16AA NT3X16AB NT3X16BA NT3X16BB	*Clock product equipment code*. If the entry in subfield CLKTYPE is STRAT2 or STRAT2P5, enter data in this refinement. Enter the product engineering code (PEC) of the clock hardware.
	FRTYPE	IOE	*Frame type*. If the entry in subfield CLKTYPE is STRAT2 or STRAT2P5, enter data in this refinement. An IOE (input/output equipment) frame accommodates a STRAT2P5 or a Stratum-2 clock. Entries outside the range indicated for this field are not correct.
	FRNO	0 to 511	*Frame number*. If the entry in subfield CLKTYPE is STRAT2 or STRAT2P5, enter data in this refinement. Enter the frame number of the clock card.
	SHPOS	0 to 77	*Shelf position*. If the entry in subfield CLKTYPE is STRAT2 or STRAT2P5, enter data in this refinement. Enter the shelf position that contains the clock card. Entries outside the range indicated for this field are not correct.
	FLOOR	0 to 99	*Floor*. If the entry in subfield CLKTYPE is STRAT2 or STRAT2P5, enter data in this refinement. Enter the floor position that contains the clock car.
	ROW	A to Z, AA to ZZ, except I, II, O, and OO	*Row*. If the entry in subfield CLKTYPE is STRAT2 or STRAT2P5, enter data in this refinement. Enter the position that contains the clock card.
	FRPOS	0 to 99	*Frame position*. If the entry in subfield CLKTYPE is STRAT2 or STRAT2P5, enter data in this refinement. Enter the frame position of the bay that contains the clock card.

SYNCLK (continued)

Field descriptions (Sheet 3 of 3)

Field	Subfield or refinement	Entry	Description
	OFFCDATA	see subfields	*Office data*. This field contains subfield OFFCONF and the associated refinements.
	OFFCONF	MASTINT MASTEXT SLAVE	*Office configuration*. Enter the correct office configuration. System initialization to MASTINT presets the configuration. Enter MASTEXT for the master external office configuration. Enter data in refinements EXTFREQ and EXTSEL. Enter MASTINT for STP offices. Enter MASTINT for the master internal office configuration. This entry does not require additional refinements. Enter SLAVE for the slave office configuration. Enter data in refinements LK0_PTYP, LK0_PNUM, LK0_PCCT, LK0_REG, LK1_PTYP, LK1_PNUM, LK1_PCCT, and LK1_REG in the following section “OFFCONF = SLAVE”.

SYNCLK (continued)

OFFCONF = MASTEXT

If the system selects master external office (MASTEXT) configuration, enter data in subfields EXTFREQ and EXTSEL.

Field descriptions for conditional datafill (Sheet 1 of 2)

Field	Subfield or refinement	Entry	Description
	EXTFREQ	F64 F1000 F1024 F2048 F2560 F5000 F10000 F10240	*External reference frequency*. Enter the external reference frequency that the system uses to synchronize the office. The value that you enter defines the frequency in kHz units. For example, F1000 is 1.00 MHz.
	EXTSEL	ANALOG or COMPOSITE	*External reference selector*. Enter the type of external reference that synchronizes the system clocks. This reference determines the backplane connector on the 9X54AC card that connects to the external source. Stratum-1 type analog signals connect to the coaxial input. Composite signals connect to the 37-pin connector. Composite signals require a BITS connector. If the value of subfield EXTSEL is ANALOG, enter data in refinement EXTTERM.

Field descriptions for conditional datafill (Sheet 2 of 2)

Field	Subfield or refinement	Entry	Description
	EXTTERM	T50 or T75	*External reference termination.* If the entry in subfield EXTSEL is ANALOG, enter data in this refinement. Enter the type of coaxial cable that connects the external reference. The ANALOG sources use the following cables: 50 ohm termination (Stratum-1 Cesium) and 75 ohm termination (Stratum-1 Loran-C).
	EXTALARM	MAJOR MINOR OFF	*External alarm.* This field indicates how the system handles SuperNode clock card problems. Enter MAJOR if the system reports Stratum-1 ALARM0 and ALARM1 clock problems. The A10 and A11 clock alarms must indicate problems on the MAP in the SYNC logs. The A10 and A11 clock alarms must reflect the QUERYCK command. Stratum-1 ALARM0 ALARM1 clock problems result in a system action. An example of a system action is a message switch of clock mastership or an office drop SYNC. Enter MINOR if the system reports Stratum-1 ALARM0 and ALARM1 clock problems. The A10 and A11 clock alarms must indicate the problems on the MAP. The clock alarms record the problems in the SYNC logs. The A10 and A11 clock alarms must indicate problems the QUERYCK command. The system action does not handle the Stratum-1 ALARM0 and ALARM1 clock problems. Enter OFF if the system does not report Stratum-1 ALARM0 and ALARM1 clock problems. The A10 and A11 clock alarms associated with these problems are not present on the MAP. The SYNC logs and the command interpreter (CI) QUERYCK command do not contain the A10 and A11 clock alarms associated with these problems.

SYNCLK (continued)

OFFCONF = SLAVE

If the entry in field OFFCONF is slave, enter data in the following refinements:

- LK0_PTYP
- LK0_PNUM
- LK0_CCT
- LK0_RMTYP
- LK0_REG
- LK1_PTYP
- LK1_PNUM
- LK1_CCT
- LK0_RMTYP
- LK1_REG

Field descriptions for conditional datafill (Sheet 1 of 3)

Field	Subfield or refinement	Entry	Description
	LK0_PTYP	ADTC, DCA, DCM, DCMT, DTC, DTCI, IDTC, LTC, PDTC, RMSC, or SPM	*Timing link zero peripheral module type*. Enter the type of peripheral module (PM) assigned to timing link 0. • ADTC (Austrian digital trunk controller) • DCA (digital carrier access) ***Note:*** The DCA is for licensee (K+S) use. • DCM (digital carrier module) • DCMT • DTC (digital trunk controller) • DTCI (ISDN digital trunk controller) • LTC (line trunk controller) • PDTC (PCM30 digital trunk controller) • RMSC (remote mobile switching center) • SPM
	LK0_PNUM	0 to 511	*Timing link zero peripheral module number*. Enter the number of the PM assigned to timing link 0. The range is restricted for SPMs from 0 to 63. Select an SPM that is datafilled as internal in table MNNODE.
	LK0_CCT	0 to 4	*Timing link zero circuit number*. Enter the circuit card number that belongs to timing link 0. The DCMs have circuits 0 to 4. The DTC, LTC, PDTC, ADTC, or IDTC use 0 and 2. The DCA DS-1 ports can have circuits 0 to 3 assigned. CCT is not a datafilled value for SPM. Entries outside the range for this field are not correct.

SYNCLK (continued)

Field descriptions for conditional datafill (Sheet 2 of 3)

Field	Subfield or refinement	Entry	Description
	LK0_RMTYP	OC3	*Timing link zero resource module (RM) type.* This field is a refinement over circuit number and was introduced for SPM. The field defines the carrier type of the timing link.
	LK0_REG	0 or 1	*Timing link zero phase register*. This register indicates the count register from which the system extracts the phase samples. This field does not affect a DCM. Enter 0 or 1 to satisfy the table editor.
	LK1_PTYP	ADTC, DCA, DCM, DCMT, DTC, DTCI, IDTC, LTC, PDTC, RMSC, or SPM	*Timing link one peripheral module type*. Enter the type of PM assigned to timing link 1. See field LK0_PTYP.
	LK1_PNUM	0 to 511	*Timing link one peripheral module number*. Enter the number of the PM assigned to timing link 1. The range is restricted for SPMs from 0 to 63. Select an SPM that is datafilled as internal in table MNNODE.
	LK1_CCT	0 to 4	*Timing link one circuit number*. Enter the circuit card number that the system assigns to timing link 1. The DCMs have circuits 0 to 4. The DTC, LTC, PDTC, ADTC or IDTC use circuits 0 and 2. The system assigns DCA DS-1 ports to circuits 0 to 3. CCT is not a datafilled value for SPM. Entries outside the range indicated for this field are not correct.

Field descriptions for conditional datafill (Sheet 3 of 3)

Field	Subfield or refinement	Entry	Description
	LK1_RMTYP	OC3	*Timing link one RM type.* This field is a refinement over circuit number and was introduced for SPM. The field defines the carrier type of the timing link.
	LK1_REG	0 or 1	*Timing link one phase register*. This register indicates the phase count register from which the system extracts timing samples. This field does not affect a DCM. Enter 0 or 1 to satisfy the table editor.

Datafill example

Sample datafill for table SYNCLK appears in the following example.

The operation of the link for a slave DMS SuperNode switching unit appears in the following example.

MAP example for table SYNCLK

```
CLKKEY
CLKDATA
                                                    OFFCDATA
_____________________________________________________________

     0
STRAT3
                  SLAVE   DTC   1  0 0    DTC   0  0 0
```

MAP example for table SYNCLK provisioning SPM OC3 as a timing link

```
CLKKEY
CLKDATA
                                                    OFFCDATA
_____________________________________________________________

     0
STRAT3
                  SLAVE  SPM  31  OC3  SPM  33  OC3
```

SYNCLK (end)

Table history

SP13

Information added for SPM OC-3 line timing.

CSP02

Field REMOTE_CLOCK_CONFIG and references to this field were deleted.

BCS36

An additional information section was added to describe return-to-service. A description of field REMOTE_CLOCK_CONFIG was added.

Additional information

This section provides additional information about table SYNCLK.

Changes to the clock type

Changes to the data in table SYNCLK can cause a change in the clock type (stratum). If this condition occurs, the return to service (RTS) requires an out-of-band (OOBAND) option to operate. Use the TSTMS (test message switch) and RTS OOBAND commands to change the clock type. Do not use the standard RTS command.

Use the standard RTS command if data entry changes do not cause the clock type to change.

SYNOGLNK

Table name

Synchronous Outgoing Timing Link Table

Functional description

Table SYNOGLNK allows the datafill of outgoing timing links. Each tuple includes the peripheral module (PM) type, PM number and PM circuit. Each tuple includes the information for associated downstream office incoming timing links. The operating company can use table SYNOGLNK to record the carriers used as outgoing timing links.

Datafill sequence and meaning

You do not need to enter data in other tables before you enter data in table SYNOGLNK.

The entry in field TOCLLI must have the same entry in table CLLI.

Table size

0 to 20 tuples

SYNOGLNK (continued)

Datafill

Datafill for table SYNOGLNK appears in the following table.

Field descriptions (Sheet 1 of 4)

Field	Subfield or refinement	Entry	Explanation and action
FROMPTYP		for SuperNode ADTC, DCA, DCM, DCMT, DTC, DTCT, DS1_ICP_TYPE, DS1_HSIE_TYPE, HSI, IDTC, LTC, LTCT, PDTC, or RMSC	*From peripheral type.* Enter the carrier type of the outgoing timing link. The correct entries are the same correct entries for fields LK0PTYP and LK1PTYP in table SYNCLK in slave configuration.
FROMPTYP (continued)		for NT40 DS1_DCM_TYPE DS1_LTC_TYPE DS1_DTC_TYPE DS1_RMSC_TYPE D30_DCA_TYPE D30_IDTC_TYPE D30_PDTC_TYPE D30_ADTC_TYPE D30_DCMT_TYPED 30_TDTC_TYPE D30_TLTC_TYPE DS1_DTCI_TYPE DS1_ICP_TYPE DS1_HSI_TYPE or DS1_HSIE_TYPE	Entries after DS1 indicate that the PM is a DS1 type. Entries after D30 indicate that the PM is a D30 type. • ADTC (Austrian digital trunk controller) • DCA (Austrian digital carrier module) • DCM (digital carrier module) • DCMT • DTC (digital trunk controller) • DTCT • ICP (integrated cellular peripheral) • HSI (high-speed interface) • HSIE (high-speed interface extended) • IDTC (international digital trunk controller) • LTC (line trunk controller) • PDTC (PCM30 digital trunk controller) • RMSC (remote mobile switching center) • TLTC (Turkish line trunk controller)
FROMPNUM		0 to 2047	*From peripheral number.* Enter the PM number of the outgoing timing link.

SYNOGLNK (continued)

Field descriptions (Sheet 2 of 4)

Field	Subfield or refinement	Entry	Explanation and action
FROMCCT		0 to 63 or 0 to 53	*From circuit.* Enter the T1 circuit number of the outgoing timing link in the PM. If the switch is a SuperNode, the range is 0 to 63. If the switch is an NT40, the range is 0 to 53.
TOCLLI		alphanumeric (a maximum of 11 characters) or $	*To common language location identifier.* Enter the common language location identifier (CLLI) code of the corresponding downstream incoming timing link. Enter $ if a CLLI is not known.
TOSTRAT		STRAT2 STRAT3 STRAT2P5 or $	*To stratum.* Enter the system clock stratum of the downstream office. Enter $ if a downstream stratum is not known.
TODMS		Y or N	*To DMS.* Enter Y (yes) if the downstream office is a DMS. Enter data in refinements TO_PTYP, TO_PNUM, and TO_CCT. Enter N (no) if the downstream office is not a DMS. Enter data in refinements TO_SPANNO and TO_MISC_INFO.

SYNOGLNK (continued)

Field descriptions (Sheet 3 of 4)

Field	Subfield or refinement	Entry	Explanation and action
TO_PTYP		for SuperNode ADTC, DCA, DCM, DCMT, DTC, DTCT, DS1_ICP_TYPE, DS1_ICP_TYPE DS1_HSIE_TYPE IDTC, LTC, LTCT, HSI, PDTC, or RMSC for NT40 DS1_DCM_TYPE DS1_LTC_TYPE DS1_DTC_TYPE DS1_RMSC_TYPE D30_DCA_TYPE D30_IDTC_TYPE D30_PDTC_TYPE D30_ADTC_TYPE D30_DCMT_TYPE D30_TDTC_TYPE D30_TLTC_TYPE DS1_DTCI_TYPE DS1_ICP_TYPE DS1_HSI_TYPE or DS1_HSIE_TYPE	*To peripheral type.* If Y is the entry in field TODMS, enter data in this refinement. Enter the DMS carrier type of the downstream office incoming timing link. The entries for this field must be the same as the entries for field FROMTYP.
TO_PNUM		0 to 2047	*To peripheral number.* If Y is the entry in field TODMS, enter data in this refinement. Enter the DMS PM number of the downstream office incoming timing link.

Field descriptions (Sheet 4 of 4)

Field	Subfield or refinement	Entry		Explanation and action
TO_CTT		0 to 63 or to 53	0	*To carrier circuit.* If Y is the entry in field TODMS, enter data in this refinement. Enter the DMS T1 carrier circuit number of the downstream office incoming timing link. If the switch is a SuperNode, the range is 0 to 63. If the switch is an NT40, the range is 0 to 53. Enter 0 or 2 for LTC, DTC, IDTC, PDTC, and ADTC. Enter 0, 1, 2 or 3 for DCA. Enter 0, 1, 2, 3 or 4 for DCM and DCMT. For all other PM types, a restriction is not available.
TO_SPANNO		0 to 31 or $		*To span number.* If N is the entry in field TODMS, enter data in this refinement. Enter the span number of the downstream office incoming timing link. Enter $ if a span number is not known.
TO_MISC_ -INFO		alphanumeric (a maximum of 16 characters) or $		*To miscellaneous information.* If N is the entry in field TODMS, enter data in this refinement. Enter the T1 description of the downstream office incoming timing link. This entry identifies the circuit that uses non-DMS terminology. Enter $ if the character or information is not available.

Datafill example

Sample datafill for table SYNOGLNK appears in the following example.

SYNOGLNK (end)

MAP example for table SYNOGLNK

```
  FROMPTYP FROMPNUM FROMCCT        TOCLLI     TOSTRAT
TODMS                   TOHWINFO
_____________________________________________________________________________

       LTC       0      15    VANCOUVER_2 (STRAT2P5)$
    N     ( 9)$ LINECARD_4_CCT_2
```

Table history

BCS34

Table SYNOGLNK was introduced in BCS34.

SVRCKT

Table name

Service Circuit

Functional description

The following data for each Digitone outpulsing circuit (SVDTMF) appears in Table SVRCKT. This data is also for each R2 interregister signaling circuit (SVMFC) or service observing circuit (SVOBSV):

- the pseudo fixed common language location identifier (CLLI)
- the number the operating company assigns
- the equipment location

The maximum number of Digitone outpulsing circuits, R2 interregister signaling circuits, or service observing circuits is 1024 for each type of circuit.

Call Screening, Monitoring and Intercept (CSMI) Enhancement—Stub Message Deletion, feature 59013873, deletes stub messages on the network based answering service (NBAS) of subscribers. Cards 3X68 on SVDTMF provide dual tone multifrequency (DTMF) outpulsing to delete the stub messages.

Datafill sequence and meaning

Enter data in Table CLLI before you enter data in table SVRCKT.

Table size

Field TRKGRSIZ in table CLLI for pseudo CLLIs SVOBSV, SVMFC, and SVDTMF controls the size of table SVRCKT.

SVRCKT (continued)

Datafill

Datafill for table SVRCKT appears in the following table.

Field descriptions (Sheet 1 of 2)

Field	Subfield	Entry	Explanation and action
SVCTKEY		see subfields	*Service circuit key*. This key contains subfields CLLI and NUM.
	CLLI	SVDTMF SVMFC or SVOBSV	*Common language location identifier*. When the type of the service circuit is a Digitone outpulsing circuit, enter SVDTMF. When the type of service circuit is an R2 interregister signaling circuit, enter SVMFC. When the type of service circuit is a service observing circuit, enter SVOBSV. ***Note:*** Do not use SVMFC if the supporting software for R2 interregister signaling is not available.
	NUM	0 to 1023	*Service circuit number*. Enter the number that the operating company assigned to the following: • the Digitone outpulsing circuit • the R2 interregister signaling circuit • the service observing circuit
TMTYPE		MTM	*Trunk module type*. Enter the type of trunk module with the Digitone outpulsing circuit, the R2 interregister signaling circuit, or the service observing circuit.
TMNO		0 to 2047	*Trunk module number*. Enter the number of the trunk module with the Digitone outpulsing circuit, the R2 interregister signaling circuit, or the service observing circuit.

Field descriptions (Sheet 2 of 2)

Field	Subfield	Entry	Explanation and action
TMCKTNO		0 to 29	*Trunk module circuit number*. Enter a number equal to the trunk module circuit number assigned to the following: • the Digitone outpulsing circuit • the R2 interregister signaling circuit • the service observing circuit ***Note:*** When field TMCKTNO is greater than 20, perform a cold restart if you attempt to enter SVDTMF in field CLLI.
CARDCODE		3X68AB 3X68BB or 5X29AB	*Card code*. Enter the product engineering code (PEC) for the correct tone card. Card codes for the different circuits are: SVDTMF: • 3X68AB (dual-tone multifrequency generator circuit card) • 3X68BB (dual-tone multifrequency generator circuit card) SVOBSV: • 5X29AB (service observing circuit card) SVMFC: • not available ***Note:*** Cards 3X68 provide the DTMF outpulsing to delete the stub message left on the NBAS of subscribers. Feature 59013873 introduces this enhancement to CSMI.

Datafill example

Sample datafill for table SVRCKT appears in the following example.

SVRCKT (end)

MAP example for table SVRCKT

```
SVCTKEY                  TMTYPE  TMNO  TMCKTNO    CARDCODE

SVDTMF    0                MTM     1       26      3X68AB
SVDTMF    1                MTM     1       27      3X68BB
SVDTMF    2                MTM     1       28      3X68AB
SVDTMF    3                MTM     1       29      3X68BB
```

Table History

NA013

This release introduces feature 59013873, CSMI Enhancement—Stub Message Deletion, that uses cards 3X68 outpulsing to delete the stub messages.

SYSDATA

Table name

System Data (SYSDATA)

Functional description

The SYSDATA table contains a complete list of table names assigned to new table control. All tables in table CUSTAB have the value of N in field OLDTC (old table control).

The data for each of the tables is required for new table control.

The field SIZE contains only the dynamic size updated at Dump and Restore for those tables that are listed in table DATASIZE. For tables not listed in table DATASIZE, the value of field SIZE in SYSDATA does not reflect the actual table size.

The memory allocated and table length in the tables can be dynamically allocated in DATASIZE and have a fixed value or be dependent upon input provided by the operating company.

A table can use only one of the above methods.

Table control determines the datafill for this table. The operating company cannot change the datafill.

Protection levels

One of the following three protection levels are assigned to each of the table names.

- SYSPROT (system protection)

  The length or contents of a table with system protection cannot be changed by the operating company. Contact Northern Telecom to modify these tables.

- ENGPROT (engineering protection)

  The operating company can modify tables with engineering protection by loading module ENGWRITE from the non-res tape and entering command ENGWRITE ON.

- NILPROT (nil protection)

  All users can modify contents of tables with nil protection.

SYSDATA (continued)

The following table shows protection levels for various tables.

(Sheet 1 of 2)

Table name	Protection level	System type
ACLANG	SYSPROT	250
ALARMTAB	SYSPROT	250
CELLULAR	NILPROT	MTX
CELLCUST	NILPROT	MTX
CUSTAB	SYSPROT	250
CUSTAREA	SYSPROT	250
CUSTFLDS	SYSPROT	250
CUSTPROT	ENGPROT	250
DATASIZE	SYSPROT	250
DSLIMIT	SYSPROT	250
FOREIGN_KEY	SYSPROT	250
KEY_ITEM	SYSPROT	250
KEY_MAP	SYSPROT	250
LCCOPT	SYSPROT	250
LCCOPT_DATA	SYSPROT	250
LOGICAL_TABLE	SYSPROT	250
NNASST	SYSPROT	250
OFCENG	ENGPROT	250
OFCOPT	SYSPROT	250
OFCSTD	SYSPROT	250
OKPRAMS	SYSPROT	250
OPTOPT	SYSPROT	250
OPTOPT_DATA	SYSPROT	250

(Sheet 2 of 2)

Table name	Protection level	System type
RADR	ENGPROT	250
SYSDATA	SYSPROT	250

The following items require input from the operating company:

- CLLI

  Specify the maximum number (0-1024) of CLLIs required before the next extension.

- TONES

  Specify the maximum number (0-2048) of tones required before the next extension.

- TRUNK GROUPS

  Specify the maximum number (0-8191) of trunk groups required before the next extension.

- TRUNK MEMBERS

  Specify the maximum number of trunks required before the next extension.

- TRUNK SUBGROUPS

  Specify the maximum number of trunk subgroups required before the next extension.

- RECEIVERS

  Specify the maximum number of MF and digitone receivers (0-1024) required before the next extension.

- NWMPPLN

  Specify the maximum number of network management preplans (0-256) required before the next extension.

- NWMSC

  Specify the maximum number of network management scan groups (0-256) required before the next extension.

- NWMAOCR

  Specify the maximum number (0-64) of network management automatic out of chain reroutes required before the next extension.

- CONF3PR

SYSDATA (continued)

Specify the maximum number (0-999) of three port conference circuits required before the next extension.

- ECHOSUP

  Specify the maximum number (0-2048) of digital echo suppressors required before the next extension.

- NLUPCLLI

  Specify the maximum number nailed up connections (0-801) required before the next extension.

Table size

Memory is allocated for 2048 tuples in the SYSDATA table.

Field descriptions

The following table describes field names, subfield names, and valid data ranges for table SYSDATA.

Field	Subfield or refinement	Entry	Explanation and action
SDKEY		alphabetic	SYSTEM DATA KEY. Input is equal to the preprinted table name.
DATATYPE		alphanumeric	DATA TYPE. Input is equal to the preprinted input form.
SIZE		0-4096	SIZE. Enter the maximum number of circuits, groups, and so on. Required for the table before the next extension.
STATUS		alphanumeric	STATUS. Input is equal to the preprinted input form.
PROTLVL		ENGPROT, NILPROT, SYSPROT	PROTECTION LEVEL. Input is equal to the preprinted input form.

Datafill example

The following example shows sample datafill for table SYSDATA. The first example is typical, but is only partially shown.

SYSDATA (end)

```
SDKEY       DATA TYPE          SIZE        STATUS  PROTLVL
SYSDATA LOGICAL_SYS_DATA      2048     AVAILABLE   SYSPROT
NIL         $                  0     UNAVAILABLE   NIPROT
KEY_MAP KEY_MAP_DT            64       AVAILABLE   SYSPROT
KEY_ITEM    KEY_ITEM_DT      2048     AVAILABLE   SYSPROT
LOGICAL_    LOGICAL_TABLE_DT 2048     AVAILABLE   SYSPROT
```

The following is an example of input for table SYSDATA in a combined toll switch.

```
CMD SDKEY        DATATYPE     SIZE      STATUS      PROTLVL
REP CLLI         DATA_CLLI    200       AVAILABLE   NILPROT
REP TONES        TONE_DATA_   5         AVAILABLE   NILPROT
                 TUPLE
REP      TRKGRP  TRUNK_       180       AVAILABLE   NILPROT
                 GROUP_DATA_
                 TUPLE
REP      TRKSGRP TRUNK_SGRP   360       AVAILABLE   NILPROT
                 _DATA TUPLE
REP      TRKMEM  TRUNK_      3000       AVAILABLE   NILPROT
                 MEMBER_
                 DATA_ TUPLE
```

TABLES

Table name

Table TABLES

Functional description

Table TABLES is a software management table that cross-references a number of internal tables. User datafill is not required, the table is displayed for information only.

TABMON

Table name

Table Monitoring table

Functional description

This table allows the operating company to activate or deactivate monitoring for each table in the DMS load. If monitoring is active, the operating company can use data in TABMON to activate notification and generation of (TUPL) logs. The system generates these logs for tuple changes, additions, and deletions in the monitored table.

This table functions when software optionality control (SOC) option BASE CO Data Change is on.

Datafill sequence and meaning

Enter data in the following tables before you enter data in table TABMON:

- SOCVAR
- SOCFEAT
- SOCOPT

Table size

The size of the table is static. The size of the table depends on the number of tables in the load. You can change only tuples. You cannot add or delete tuples.

Datafill

Datafill for table TABMON appears in the following table.

Field descriptions (Sheet 1 of 2)

Field	Subfield or refinement	Entry	Explanation and action
TABNAME		vector of a maximum of 16 alphanumeric characters	Enter the DMS table name.
MONITOR		Y or N	Enter Y to activate table monitoring. Enter N to deactivate table monitoring. The default value is N.

TABMON (end)

Field descriptions (Sheet 2 of 2)

Field	Subfield or refinement	Entry	Explanation and action
LOG		Y or N	Enter Y for TUPL log generation. Enter N to disable TUPL log generation. The default value is N.
FILES		vectors of a maximum of eight characters each	Enter the names of the files where the system sends tuple change notification. The default value is $ (dollar sign).
OWNER		vector of a maximum of three user names	Enter a maximum of three userids. The system does not notify these users of table datafill changes that the users made. The default value is $.

Datafill example

Sample datafill for table TABMON appears in the following table.

MAP example for table TABMON

```
TABNAME MONITOR LOG         FILES   OWNER
_____________________________________________________
   CLLI       Y  N  FILE1 FILE2 $ ADMIN $
```

Table history

BASE07

Table TABMON was introduced in BASE07.

Additional information

Log reports TUPL600, TUPL601, TUPL602, TUPL603, TUPL604, TUPL605, and TUPL606 associate with the table TABMON.

TANDMRTE

Table name

Tandem Route (TANDMRTE) table

Functional description

Table TANDMRTE is used for direct termination routing to tandem trunks connecting switches in the IEC network.

Datafill sequence and implications

Datafill table CLLI before datafilling the CLLI subfield in table TANDMRTE.

Datafill table RTEATTR before referencing it in the ATTR_INDEX refinement for RTESEL=SX.

Table size

0 to 127 tuples

Field descriptions

The following table describes field names, subfield names, and valid data ranges for table TANDMRTE.

TANDMRTE field descriptions

Field	Subfield or refinement	Entry	Explanation and action
SWITCHID		0 to 999	SWITCH ID. Enter the terminating switch identifier. There is no default value.
ROUTE		see subfields	ROUTE LIST. Datafill the RTESEL subfield; enter up to nine ROUTEs.
	RTESEL	S, SX, orT	ROUTE SELECTION. Enter the route selection and datafill the appropriate refinements. See RTESEL=S, RTESEL=SX, or RTESEL=T sections for refinement datafill.
OPTION		see subfields	OPTIONS. This field is an options field. Up to six options may be entered.
		NIL	NIL is used to remove a provisioned option.
		LOADSHAR	LOADSHARE. Enter LOADSHAR to enable loadsharing.

TANDMRTE (continued)

RTESEL=S

When RTESEL=S, datafill the following refinements:

RTESEL=S refinement descriptions

Refinement	Subfield or refinement	Entry	Explanation and action
CONNTYPE		D	CONNECTION TYPE. Enter the type of connection. The only valid entry is D.
CLLI		Valid CLLI datafilled in table CLLI	COMMON LANGUAGE LOCATION IDENTIFIER. Enter a valid CLLI name.

RTESEL=SX

When RTESEL=SX, datafill the following refinements:

RTESEL=SX refinement datafilll

Refinement	Subfield or refinement	Entry	Explanation and action
CLLI		Valid CLLI datafilled in table CLLI	COMMON LANGUAGE LOCATION IDENTIFIER. Enter a valid CLLI name.
ATTR_INDEX		Valid entry in table RTEATTR	INDEX TO TABLE RTEATTR. Enter a valid key to table RTEATTR..

RTESEL=T

When RTESEL=T, datafill the following refinements:

RTESEL=T refinement datafilll

Refinement	Subfield or refinement	Entry	Explanation and action
EXTREID		OFRT, OFR2, OFR3, or OFR4, and 0 to 1023	EXTERNAL ROUTE ID. This refinement provides an index into the external routing tables. Enter a table ID and key separated by a space.

Datafill example

The following example shows datafill for table TANDMRTE.

```
SWITCHID ROUTE OPTIONS
----------------------
22 (S D IMT761C7DR22) (S D IMT761C7DR33) $ $
111 (S D ONT545TWMFWK) $ $
36 (SX IMT761C7LP16 SS7RTE) $ $
```

Table history

UCS13

Added the EXTERNAL ROUTE ID (RTE=T) refinement to the ROUTE SELECTION (RTE) subfield of the ROUTE LIST (ROUTE) field (SR60093018).

UCS12

Updated to include edtorial changes.

UCS09

Increased SWITCHID field range to 999 (AX0960).

UCS07

Selector SX is added to the RTESEL subfield.

UCS05

Table TANDMRTE is created.

TAPIDTAB

Table name

Physical Tap Identifier table

Functional description

Table TAPIDTAB preserves the relationship between integrated link maintenance (ILM) buses and taps and access identifiers over BCS applications.

Direct access to the table cannot occur. The customer contains read-only access. Access that is not direct can occur through data entry of a device that requires ILM supported resources allows access that is not direct. Access that is not direct can occur as part of a restore operation on the N + 1 BCS as part of a BCS application.

Datafill sequence and meaning

Does not apply. The table is write-protected against direct data entry.

Table size

0 to 2048 tuples. The number of tuples dynamically determines table size.

Datafill

Datafill for table TAPIDTAB appears in the following table.

Field descriptions (Sheet 1 of 2)

Field	Subfield or refinement	Entry	Explanation and action
ACID		see subfields	*Access identifier.* The access identifier identifies the tap associated with an access identifier. The ACID field is multiple with three parts: AKEY, AIDX, and ACHNL.
	KEY	0 to 1023	*Access key.* The access key part of the access identifier.
	INDEX	0 to 1023	*Access index.* The access index part of the access identifier.
	CHANNEL	0 to 1023	*Access channel.* The access channel part of the access identifier.

Field descriptions (Sheet 2 of 2)

Field	Subfield or refinement	Entry	Explanation and action
TAPID		see subfields	*Tap identifier.* The tap identifier is an identifier that ILM uses to identify a tap on a bus. The TAPID tuple is a multiple with three parts. These parts are AKEY, BUSOFST, and TAPOFST.
	AKEY	0 to 1023	*Access key.* The access key of the bus the tap is on.
	BUSOFST	0 to 255	*Bus offset.* If more than one bus is on an access key, use the bus offset to differentiate between the buses.
	TAPOFST	0 to 255	*Tap offset.* The tap offset identifies a tap off a bus.
LOCALID		0 to 255	*Local tap identifier.* The local tap identifier identifies a tap on an access key.

Datafill example

Sample datafill for table TAPIDTAB appears in the following example.

MAP example for table TAPIDTAB

```
ACIID      TAPID   LOCALID
_____________________________________________________________

2 0 0       2 0 0       0
3 0 0       2 0 1       0
3 1 0       2 0 2       1
```

Table history

BCS26

Table TAPIDTAB was introduced in BCS26.

Additional information

Restore table TAPIDTAB before you restore the inventory tables of the devices that require ILM resources. These tables are APINV, LIMINV, LIUINV, and NIUINV. Nortel recommends that this table precede table VCHIDTAB.

TCAPANNC

Table name

TCAP Announcement (TCAPANNC) table

Functional description

Table TCAPANNC provides the ability to provision a specific destination against a received TCAP standard or custom announcement parameter value. The call processing action directs the call to connect to an announcement, a tone, or to an identified treatment.

> ***Note:*** Tables TCAPANNC, ACGGAP, and ACGDUR are only applicable for VER 2 TCAP.

The table is indexed by a two-part key consisting of a numeric index and the announcement index value from the standard or custom announcement TCAP parameter. The entry retrieved identifies the destination of the call for call processing. The call can terminate to either an announcement CLLI (identified in table ANNS), a tone CLLI (identified in table TONES), or a defined treatment. Treatment routes are provisioned in table TMTCNTL.

This table is initialized to provide default provisioning of reorder (RODR) treatment against all announcement indexes for numeric index zero, the standard announcement index. When call processing attempts to index the table with the custom numeric index (one), and no provisioning exists against the announcement index for this numeric index, then the destination provisioned against the standard announcement index is automatically used.

FlexDial Framework interaction

For FLEXDIAL framework AXXESS originating agents, when a TCAP standard announcement parameter is received, the numeric index portion of the key into the TCAPANNC table is always 0.

For TCAP custom announcement parameters, the numeric index portion of the key is determined through processing of the FLEXFEAT table TCAPANNC option for a previously executed subscriber number or calltype collectable. (The last TCAPANNC value processed for the call determines the numeric index used.)

If a TCAPANNC option has not been processed (no value is set for the call), then a numeric index value of 1 is used by default.

If a tuple is not found in the TCAPANNC table using the custom announcement numeric index, a numeric index of 0 (standard announcement) is used by default.

Memory allocation

Table TCAPANNC uses a minimum of 1.5K bytes of system memory and a maximum of 3072K bytes of system memory.

Datafill sequence and implications

Tables CLLI, ANNS, and TONES must be provisioned before table TCAPANNC can be properly provisioned.

Field descriptions

The following table describes field names, subfield names, and valid data ranges for table TCAPANNC.

(Sheet 1 of 2)

Field	Subfield or refinement	Entry	Explanation and action
TCAPANNC_KEY		see subfields	TCAP ANNOUNCEMENT KEY. This field consists of a 2-part key: NUMERIC_INDEX and ANNC_INDEX.
	NUMERIC_INDEX	0 to 2047	NUMERIC INDEX. For the standard announcement TCAP parameter, the numeric index value used to index the table is 0. For the custom announcement TCAP parameter, the number index value used to index the table is 1, except for AXXESS originating agents, where the TCAPANNC value set for the call determines the numeric index. Default is 1 if no value has been set for the call.
	ANNC_INDEX	0 to 255	ANNOUNCEMENT INDEX. The announcement index is the value returned in the TCAP standard or custom announcement parameter. If a TCAP referral number parameter is present in the response message recorded, then 128 is added to the announcement parameter value before indexing the table.
DESTTYPE		see subfields	DESTINATION TYPE. This field identifies if the destination for the call is an announcement, tone, or treatment. The STDIDX option simply prolongs the destination specification by identifying a value to re-index the table.

TCAPANNC (continued)

(Sheet 2 of 2)

Field	Subfield or refinement	Entry	Explanation and action
		ANNC	ANNOUNCEMENT. When DESTTYPE=ANNC, datafill the CLLI refinement.
	CLLI	CLLI datafilled in table ANNS	
		TONE	TONE. When DESTTYPE=TONE, datafill the CLLI refinement.
	CLLI	CLLI datafilled in table TONES	
		TRMT	TREATMENT. When DESTTYPE=TRMT, datafill the TRMT refinement.
	TRMT	Treatment datafilled in table TMTCNTL	
		STDIDX	STANDARD INDEX. When DESTTYPE=STDIDX, datafill the STDIDX refinement.
	STDIDX	0 to 255	STANDARD INDEX. Identifies the announcement index within the table. The table is the re-indexed with the key of “0 <STDIDX value>" to retrieve a destination for the call.

Datafill example

The following example shows datafill for table TCAPANNC.

```
TCAPANNC_KEY DESTTYPE
_____________________________________________________________
0 0 TRMT RODR
0 15 STDIDX 0
147 100 TRMT DAL ( 22)
```

Table history

UCS12

Updated to include editorial changes.

UCS05

Table TCAPANNC is created.

UCS06

Modified the key into the TCAPANNC table to match the range of values allowed in the TCAPANNC option of the FLEXFEAT table.

TCAPTRID

Table name

TCAP Transaction Identifier Table

Functional description

ATTENTION

Feature 59014752 (TCAPTRID Removal) obsoletes table TCAPTRID. Identifier pools (IDPL) automatically allocate transaction and component identifiers for all applications.

Table TCAPTRID continues to be visible. However, during the One-Night Process (ONP), the system sets the values for transaction and component identifiers to zero, and the value for field IDPLUSER to Y. As a result, all applications obtain their transaction IDs from IDPLs.

You cannot create or change any datafill in table TCAPTRID.

If you try to add a tuple in table TCAPTRID, the system displays the following message:

```
Applications no longer engineer TCAP transaction and component
Ids in table TCAPTRID. They are dynamically allocated by
Identifier Pool software.
```

If you try to change a tuple in table TCAPTRID, the system displays the following message:

```
Application has converted to Identifier Pool Software.
Modification of this tuple is not allowed.
```

Note: You can still delete tuples from table TCAPTRID. Nortel Networks recommends that you delete all tuples after the ONP.

Datafill sequence and meaning

Does not apply.

Table size

Does not apply.

Datafill

Do not add or change any tuples.

Field descriptions

Field	Subfield	Entry	Explanation and action
TCAPAPPL		ACBAR, AIN, CNAMD, DNVAL, INAP, MAPMSC, NACD, NMS, NRAG, NSSTCN, OLNS, PVN, REPLDIGS, RTRS, or SIGTRANS	*Transaction capabilities application* Do not enter or change any values in this field.
NUMTRIDS		numeric (0 to 32 767)	*Number of transaction identifiers* The default value is 0. Do not change the value for this field.
NUMCOMPS		numeric (0 to 32 767)	*Number of component identifiers* The default value is 0. Do not change the value for this field.
IDPLUSER		Y or N	*Identifier pools in use* The default value is Y. IDPLs dynamically allocate the TCAP transaction and component identifiers for the application. Do not change the entry for this field.

Datafill example

Sample datafill for table TCAPTRID appears in the following example.

TCAPTRID (continued)

MAP example for table TCAPTRID

```
TCAPAPPL   NUMTRIDS   NUMCOMPS   IDPLUSER
-------------------------------------------

     PVN          0          0          Y
   ACBAR          0          0          Y
    NACD          0          0          Y
   DNVAL          0          0          Y
     NMS          0          0          Y
FREEPHONE          0          0          Y
     AIN           0          0          Y
   CNAMD          0          0          Y
```

Table history

TL13

Table TCAPTRID obsoleted.

NA011

Added information about changes to AIN and INAP applications. Changed MAP example.

NA009

Entry CNAMD in field TCAPAPPL was updated for ISDN Primary Rate Interface (PRI) Calling Name Delivery (I-CNAMD) in NA009.

NA008

The TCAP TRID formula was changed for AIN Essentials, AIN Service Enablers, and local number portability (LNP) in NA008. These changes occurred in accordance with the method that Bob Englehart and Susan Bohme (7L16) use. Note this change patches back to NA007 for AIN Essentials.

APC08

Entry INAP was added in field TCAPAPPL for the INAP protocol in APC08.

TL08

Field IDPLUSER was added in TL08.

TL05

Value OLNS was added to field TCAPAPPL according to OLNS TCAP and AMA Changes in TL05.

TCAPTRID (end)

TOPS04

Value RTRS was added to field TCAPAPPL for each feature AN1389 in functionality External RTRS Interface, ENSV0009 in TOPS04.

BCS36

The total NUMTRIDS for all applications was changed in the “Table size section" and field NUMTRIDS. Reference to the NORESTARTSWACT utility was added in BCS36.

TCNFAST

Table name

Travel Card Number Fast (TCNFAST) table

Functional description

Table TCNFAST contains the travel card numbers (TCN) used for the Travel Card Service. This in-switch database validates calling card numbers if the office parameter MCCS_VERIFY_TYPE is set to INSWITCH. Otherwise, the calling card number is validated at the SCP. Refer to the *UCS DMS-250 TCAP Application Guide* for additional information.

Each Travel Card Service subscriber is assigned a unique 14-digit TCN. The Travel Card Service allows the subscriber to place calls through the operating company network from any location and have the billing charged against the TCN.

The Travel Card Service is available on a per-trunk-group basis for off-net access line, incoming or two-way off-net access trunks, equal access network, or dedicated access line. Travel Card Service is possible on trunk groups only when the trunk group field MCCS option is selected for that trunk.

A Travel Card Service call consists of two stages of digit collection. The address digits are collected and a prompt tone is supplied to the subscriber. The subscriber then enters the TCN. The UCS DMS-250 switch accesses table TCNFAST to determine if the TCN is assigned to a subscriber, and if the subscriber is permitted access to the network with the TCN.

One of two possible results of the screening process can occur:

- positive authorization/identification -This response sends a confirmation tone to the subscriber, then translates and routes the call based on the called number dialed. (Refer to the *UCS DMS-250 Office Parameters Reference Manual* regarding MCCS prompt/confirmation tones.)
- negative authorization -This response prompts the subscriber with an announcement to enter a valid TCN. If an invalid TCN is entered a second time, the call is blocked. Each time a caller tries to use an unauthorized or not datafilled TCN, the OCC230 log generates.

Table size

Table TCNFAST accommodates up to 400,000 14-digit tuples. Each tuple represents a TCN.

Memory requirements

Data store for table TCNFAST dynamically allocates with the addition of new entries up to 32,000 words. A fully allocated table (400,000 tuples) requires 1,632,000 words of memory. To calculate data store requirements, use the following algorithm:

4 words per entry $\times$ 400,000 +32,000

Limitations

Due to the size of table TCNFAST, some Table Editor commands execute differently while in table TCNFAST. This difference increases the speed of data access while editing table TCNFAST.

The following table shows the Table Editor commands and the results of execution while in table TCNFAST.

Command	Description
LIST ALL	List all tuples in table TCNFAST. Tuples are listed in storage order, not in numerical order.
DELETE	Delete a tuple. After deleting a tuple, table control positions on the next TCN stored in the table, not on the next consecutive numbered TCN.
TOP	Position on the first tuple stored in the table, not on the first possible TCN (20000000000000).
BOTTOM	Position on the last tuple stored in the table, not on the last possible TCN (9999999999999).

TCNFAST (continued)

Field descriptions

The following table describes field names, subfield names, and valid data ranges for table TCNFAST.

Field	Subfield or refinement	Entry	Explanation and action
CARDNUM		14 digits(0 to 9)	CARD NUMBER. Enter the travel card number. The first digit cannot be 0 or 1.
ALLOW		Y or N	ALLOW. This field indicates whether a call using the TCN specified in the CARDNUM field can proceed. Enter Y to allow the call to proceed. Enter N to block the call.
MLTCOSID		0 to 2047	MULTIPLE CLASS OF SERVICE (COS) INDEX. This field indexes into table MULTICOS to indirectly point to table COSUS. The default value is 0 to indicate no COS screening is performed. With table MULTICOS, a single MLTCOSID can contain up to 32 COSUS indexes, and therefore COS screening can be performed up to 32 times per call.

Datafill example

The following example shows datafill for able TCNFAST.

TCNFAST (continued)

CARDNUM	ALLOW	MLTCOSID
29847562914375	N	48
29874356198473	Y	10
35056431723451	Y	0
76513987561487	Y	1001

TCNFAST (end)

Table history

UCS06

Updated to support the new MULTICOS table.

TCNTCH

Table name

Travel Card Number Trap Class Hotline (TCNTCH)

Functional description

Table TCNTCH translates a non-0 Trap Class number into a 7- or 10-digit hotline number, which can be a prerecorded announcement or the customer security office. This table is accessed whenever the TRAP CLASS parameter is non-zero. The table was designed for prevention of inappropriate use of the operating company's services. Table TCNTCH does not have datafill dependencies.

Table size

Table TCNTCH contains up to seven tuples.

Table TCNTCH statically allocates for the maximum number of tuples. Each tuple requires 3 words of data store; therefore, a total of 21 words of data store is required for this table.

Field descriptions

The following table describes field names, subfield names, and valid data ranges for table TCNTCH.

Field	Subfield or refinement	Entry	Explanation and action
TRAPCLASS		1-7	TRAP CLASS. Enter the non-zero Trap Classes to datafill in the TRAP CLASS field of the TCN feature data record.
TRPHOTLN		Up to 10 digits in the range of 0-9	TRAP HOTLINE. This field is associated with a 7- or 10-digit directory number or 6-digit virtual private network (VPN) number to which the TRAP CLASS terminates. Each digit is in the range 0-9.

Datafill example

The following example shows sample datafill for table TCNTCH.

```
TRAPCLAS        TRPHOTLN
_____________________________________________________________
1               21499974995
```

TERMDEV

Table name

Terminal Device Table

Functional description

Table TERMDEV lists assignments for terminal devices.

The operating company completes the input for table TERMDEV. The switching unit input/output controller (IOC) assignments to the terminal devices appear on Northern Telecom drawing number D610.

See table MTD for the terminal devices with fixed assignments on the IOC.

Assign the trunk test positions (TTP) devices in order: TTP:00, TTP:01, TTP:02, and so on. Continue assignment until the assignment of all the TTP devices occurs. When the assignment completes, entry of the remaining printers and visual display units (VDU) in the table can occur.

WARNING

Lockout condition can occur

A lockout condition is present if all commands are privileged-classed (PRIVCLASS) out for all users and terminals. The only method in which to stop the lockout is to use the user identification (userid) ADMIN. An ADMIN userid does not appear. The system does not restrict an ADMIN. An ADMIN userid is available if knowledge of the ADMIN password is present. An ADMIN userid is available if the terminal is not in the automatic login (AUTOLOGIN) mode.

If the DMS switch has a heavy load, some terminals and one log device must continue to run. Call processing and maintenance load do not affect this condition. This base support occurs if guaranteed background tasks are present. Guaranteed tasks are limited in number. Guaranteed tasks run more than other tasks.

Guarantee of the following devices can occur:

- one network management (NWM) MAP (maintenance and administration position) or port
- one switching control center system (SCCS) MAP
- one local MAP

- one service analysis position or interface
- one emergency technical assistance service (ETAS) reserved device
- one log device

A maximum of five devices can be guaranteed in table TERMDEV. Only one device can be guaranteed in table LOGDEV. The customer assigns these devices through datafill in tables TERMDEV and LOGDEV. A user logging into these devices has a guaranteed response.

Field GUAR is N by default. Change this setting if use of this feature is a requirement.

Note: To enter data table CUSTPROT can restrict access to table TERMDEV. Access limits must occur for operating companies in the United Kingdom. These limits occurs if table CUSTPROT receives data. The limits prevent the customer of third party system maintenance from reconfiguring terminal data. This type of change to terminal data affects automatic dial back and terminal command class limits.

If the switching unit contains feature AD0179 (ACD Real Time Display Enhancement), enter the datalink device in tables TERMDEV and SLLNKDEV. This entry assures connection in LNKUTIL. This entry generates the ACDRTD (ACD real time display) reports.

If the switching unit contains feature package NTX243AA (AMA teleprocessing system), enter the correct data in table TERMDEV. Entry of data for each of the two recording devices in the device processing peripheral (DPP) unit must occur. Enter data in table TERMDEV before you enter data into table DPP for the DPP links. Entry of data for terminals associated with data in different IOCs must occur to assure reliability.

Do not use the same class numbers when you enter data in tables TERMDEV, CUSTPROT, SUBPROT, or CMDS. The system does not distinguish between class numbers for commands and class numbers for system data table access privilege. Duplication of a class number can occur. This condition can cause the PERMIT command to provide intended access to a command and table access that was not intended. This event occurs because the PERMIT command assigns privilege classes for commands and for access to tables.

A change to table TERMDEV can affect the terminal data that table DPP uses. Delete the affected tuple from table DPP before the tuple from table TERMDEV.

TERMDEV (continued)

Effective in BCS30, two C-side links allow outgoing messages Central control (CC) sends to the card received over C-side link 0. The BCS30 contains the 1X67FA device controller card for the Simplified Message Desk Interface (SMDI) feature. Outgoing messages the card sends to the CC route over C-side link 1.

Entry of data in table TERMDEV requires two tuples when two C-side links occur. This requirement occurs if table TERMDEV contains a console device that uses a 1X67FA terminal controller card. When the manual addition of the first tuple occurs, table control adds a second tuple automatically.

A two-tuple restriction on field TERMDES occurs when data entry in a console device that uses the 1X67FA terminal controller occurs. In this even, a maximum field length of seven characters can occur. When the automatic addition of the second tuple occurs, the second, different tuple name takes the name of the first tuple. The capital letter I follows this name.

The maximum length of a tuple name in field TERMDES is eight characters under the following condition. Entry of data in table TERMDEV, with a console device that does not use the 1X67FA card, allows this maximum.

See table MTD for additional information.

Effective in CSP03, field CKERDISC permits the display of the CkEr (Circuit Error) alarm on the MAP IOD banner. This display does not have to occur.

Table TERMDEV defines the SMDI card 1X67FA. In a disconnected state, this device can cause an alarm in the MAP EXT banner. The new CKERDISC field does not affect this alarm.

Effective CSP04, field MODEM allows for specification of direct dial-up modems. An entry of DUGEN specifies direct dial-up modems. These modems drop the call when the user logs out. If the entry of DUGEN occurs, the data transmit ready line in the 1X67BD card toggles. This action occurs when the user logs out and the call drops.

Datafill sequence and meaning

Enter data in table IOC before you enter data into table TERMDEV.

Table size

Memory allocation for a maximum of 128 terminal devices occurs automatically. These terminal devices include 59 SMDI type console devices and 64 non-SMDI devices. Reservation of the remaining five entries for other uses occurs.

The maximum number of non-SMDI consoles available for data entry is 84 when an SMDI does not contain datafill.

Datafill

Datafill for table TERMDEV appears in the following table.

Field descriptions (Sheet 1 of 5)

Field	Subfield or refinement	Entry	Explanation and action
TERMDES		alphanumeric (a maximum of eight characters)	*Terminal designation*. Enter the name the operating company defines for each terminal device. Assignment of all TTPs must occur first, starting with the MAP. The MAP is TTP:00. The remaining TTPs follow in numerical order. After assignment of TTPs occurs, the assignment of other terminal devices can occur. Other terminal devices include as printers and VDUs Name dial-up facilities that ETAS and field service engineering (FSE) DIAL1, DIAL2, and so on, use. ***Note:*** Enter a maximum eight characters unless the 1X67FA card is in use. The 1X67FA card requires seven characters.
IOCNO		0 to 19	*Input/output controller number*. Enter the number of the IOC to which terminal device assignment occurs. See table MTD for details.
CKTNO		0 to 35	*Input/output controller circuit number*. Enter the IOC circuit number to which terminal device assignment occurs. See table MTD for details.

TERMDEV (continued)

Field descriptions (Sheet 2 of 5)

Field	Subfield or refinement	Entry	Explanation and action
TERMTYPE		CYB, DEFAULTC, DPH, FPRT, HAZ, HP, KSR, LGR2, LSG, PRT, SMDI, SPRT, TEC, VT100, VT102, or VUC4	*Terminal type*. Enter one of the following terminal types: • CYB (Cybernex) • DEFAULTC (does not support MAP) • DPH (Displayphone) • FPRT (fast printer does not pad output line with nulls) • HAZ (Hazeltine) • HP (Hewlett-Packard) • KSR (keyboard send/receiver) • LGR2 (Cybernex) • LGR2 LSG (Lear Sigler) • PRT (printer pads output line with 15 nulls) • SMDI (simplified message desk interface) • SPRT (slow printer pads output line with 30 nulls) • TEC (TEC) • VT100 • VT102 • VUC4 (Vucom) ***Note:*** Refer to the printer operating manual for number of nulls required.

TERMDEV (continued)

Field descriptions (Sheet 3 of 5)

Field	Subfield or refinement	Entry	Explanation and action
BAUDRT		B110, B134PT5, B150, B300, B600, B1200, B1800, B2000, B2400, B3600, B4800, B7200, B9600, or B19200	*Baud rate*. Enter the baud rate of the terminal device.
INTYP		CL or EIA	*Interface type*. If the terminal device has a data set or modem, enter EIA (electronic industries association interface). Enter CL (current loop) if this condition does not occur.
EQPEC		alphanumeric (a maximum of eight characters)	*Equipment product engineering code*. Enter the product engineering code (PEC) of the terminal controller card.
PRTY		EVEN, NONE, or ODD	*Parity*. Enter the parity of the terminal device.
GUAR		Y or N	*Guaranteed device*. Enter Y if the device is guaranteed. The device is guaranteed if the device continues to run and the call processing or maintenance load does not affect the device. Enter N if the device is not guaranteed. The default value is N.

TERMDEV (continued)

Field descriptions (Sheet 4 of 5)

Field	Subfield or refinement	Entry	Explanation and action
MODEM		CTS, DBANS, DUGEN, NONE, RIXON, or UDS	*Modem type.* The entry in this field describes the type of modem connected to the corresponding port. The entry determines the set of procedures to use for controlling the modem. If enhanced password control (automatic dial-back) is present, specify the type of modem. If the feature is not present, the entry is NONE. Enter CTS if the CTS212AH modem connects to the port. Enter DBANS if a modem connects to the port but does not have agency procedures. The modem does not have agency procedures if the modem is able to autoanswer. The modem is not able to autodial. Enter DUGEN for a dial-up generic modem type. Enter RIXON if the Rixon R212A modem connects to the port. Enter UDS if the Motorola UDS-224 connects to the port.

Field descriptions (Sheet 5 of 5)

Field	Subfield or refinement	Entry	Explanation and action
COMCLASS		0 to 30, NONE, or ALL	*Command class.* Enter the command classes allowed for the terminal device. A blank space separates the command classes. Enter NONE if a limit on terminal commands occurs. Enter ALL if a restriction for terminal commands does not occur. ***Note:*** If in table OFCOPT, set parameter ENHANCED_COMMAND_SCREENING to Y. Option NONE is not correct. Enter a minimum of one command in field COMCLASS. A user can log in at the terminal to perform commands allowed on the terminal. A user can log in at the terminal to perform commands allowed for the user login identification.
CKERDISC		Y or N	*CkEr alarm on DISconnected device.* Enter Y if the device can cause a CkEr alarm when it is in a DISconnected state. Enter N if the device cannot cause a CkEr alarm.

Datafill example

Sample datafill for table TERMDEV appears in the following example.

Standard datafill on a MAP device that is not guaranteed appears in the first tuple.

Datafill with a terminal ID for use in table DPP appears in the second tuple.

Datafill with a modem type of DUGEN appears in the third tuple.

TERMDEV (end)

MAP example for table TERMDEV

```
TERMDES IOCNO CKTNO TERMTYPE BAUDRT INTYP EQPEC PRTY GUAR
MODEM
          COMCLASS
         CKERDISC
_____________________________________________________________

MAP      0     8    VT100  B2400    CL    1X67AA NONE
N  NONE
                    ALL
                Y
PRT0     0       8    KSR   B1200    EIA   1X67AA NONE
N NONE
                   ALL
               N
DIAL1    0     10   VT100  B1200    EIA   1X67BD NONE
N  DUGEN
                   ALL
                N
```

Table history

CSP06

A reference to the datafill section was added in CSP06. The maximum number of non-SMDI consoles available for entry when no SMDI receives data appears in this reference.

CSP04

Entry DUGEN to field MODEM was added in CSP04.

A reference to the NT1X67BD EQPEC was added in CSP04.

Entry NONE is not a correct entry in field COMCLASS if office parameter ENHANCED_COMMAND_SCREENING contains a Y. A note stating this condition was added in CSP04.

CSP03

Field CKERDISC was added in CSP03.

BCS36

Entry SMDI to field TERMTYPE was added again in BCS36.

TERMLRN

Table name

Terminating Location Routing Numbers

Functional description

Table TERMLRN provides 16 terminating location routing numbers assigned to the switch. The table supports the swith in recognizing the location routing number (LRN) and routing the call based on the directory number (DN). The table TERMLRN is checked for the presence of a matching terminating LRN when the switch receives a terminating LRN. The key field, TERMLRN_IDX consists of an index. The terminating LRN is contained in the field TERMLRN. An options vector is included in this table, with NIL as the only valid value.

Datafill sequence and implications

The table does not change any datafill dependencies.

Table size

This table contains upto 16 tuples.

Datafill

The following table lists datafill for table TERMLRN.

Field descriptions

Field	Subfield or refinement	Entry	Explanation and action
TERMLRN_IDX		0 to 16 digits	TERMLRN INDEX. Enter an index number in the range of 0 to 15.
TERMLRN		0 to 9 digits	TERMINATING LOCATION ROUTING NUMBER. Enter a value of 0 to 9 in the 10-digit field to route the call.
OPTIONS			OPTIONS. This is an OPTIONS vector for which no options apply at this time. The only valid option is NIL.
NIL		NIL	NIL. Enter OPTION TERMLRN to route the call else enter OPTION NIL.

Datafill example

The following example shows sample datafill for table TERMLRN.

TERMLRN (end)

MAP display example for table TERMLRN

```
TERMLRN_IDX TERMLRN OPTIONS
```

Table history

UCS09

Table TERMLRN was added (AX1250).

TERMATT

Table name

Termination Attempt

Functional description

The Carrier Advanced Intelligent Network (CAIN) uses trigger tables to set triggering criteria. A call requiring CAIN services subscribes to a CAIN group (table CAINGRP), which, in turn, subscribes to one or more trigger sets.

Note: A CAIN group subscribes to a trigger set defining the point in call (PIC), trigger detection point (TDP), and trigger.

Table TERMATT defines the trigger criteria for the *Termination_Attempt* trigger at the *Termination_Attempt* TDP of the *T_Null* PIC. When the datafilled trigger criteria are met, the datafilled action is performed. Available actions are: ignore the current trigger, block the call, leave trigger detection point, continue with no trigger, invoke the PSN framework, or query the service control point (SCP).

Refer to the *UCS DMS-250 NetworkBuilder Application Guide* for CAIN services information; refer to the *UCS DMS-250 Programmable Service Node (PSN) Application Guide* for PSN information.

Datafill sequence and implications

Datafill a valid table in table CAINGRP before datafilling table TERMATT.

Table size

Minimum size: 8k. Maximum size depends on the datafilled range of values for digilator allocation.

Datafill

The following table lists datafill for table TERMATT.

Field descriptions (Sheet 1 of 4)

Field	Subfield or refinement	Entry	Explanation and action
TERMATTKY		see subfields	TERMINATION ATTEMPT KEY. Datafill the 3-part key: CAINGRP, DIGTYPE, and FROMDIGS.

TERMATT (continued)

Field descriptions (Sheet 2 of 4)

Field	Subfield or refinement	Entry	Explanation and action
	CAINGRP	Valid CAIN group datafilled in table CAINGRP	CAIN GROUP. Enter a valid CAIN group datafilled in table CAINGRP.
	DIGTYPE		Specifies the type of digits being referenced.
		XLADDR	Sets the digit type to “Translated Address"
	FROMDIGS	Up to 24 digits (0 to 9, *, #)	FROM DIGITS. Enter the first number used to define the collected address range. ***Note:*** Only enter * or # as the first digit. The digit values from least to greatest are: 0 1 2 3 4 5 6 7 8 9 * #.
TODIGS		Up to 24 digits (0 to 9, *, #)	TO DIGITS. Enter the second number used to define the range of the collected address. ***Note:*** Only enter * or # as the first digit. The digit values from least to greatest are: 0 1 2 3 4 5 6 7 8 9 * #.
ACTION		see subfield	ACTION. ACTION consists of one subfield: TRIGACT.
	TRIGACT		TRIGGER ACTION. Enter the action call processing performs when trigger criteria is met. Enter one of the following: IGNORE, CONT_NOTRIG, LEAVE_TDP, BLOCK, QUERY.
		IGNORE	IGNORE - CAIN call processing ignores these calls and regular switch processing continues.
		BLOCK	BLOCK - CAIN call processing blocks the call and AINF treatment is applied.
		QUERY	QUERY - CAIN call processing queries the SCP. Datafill the ERRACT refinement when TRIGACT=QUERY.
		LEAVE_TDP	LEAVE TRIGGER DETECTION POINT. Ignore the fact that a match was made, and continue call processing at the next trigger detection point.

TERMATT (continued)

Field descriptions (Sheet 3 of 4)

Field	Subfield or refinement	Entry	Explanation and action
		CONT_NOTRIG	CONTINUE WITH NO TRIGGER. Ignore the fact that a match was made and continue the call without further CAIN processing.
OPTIONS			OPTIONS. Datafill this field to specify optional CAIN features. Enter up to 3 options. ***Note:*** Currently, the available options are only valid for TRIGACT=QUERY.
		NIL	Enter NIL to remove an option.
		BUFFER	Enter BUFFER to activate digit buffering while the SCP is queried. The collected digits are delivered during conversational digit collection.
		GT	Enter GT to identify the global title used to identify the SCP handling the query. Datafill the GT_VALUE refinement.
		T1OVFLGT	This option the global title to use for SCP querying after a T1 timeout occurs on the default global title. Datafill the GT_VALUE refinement.
		ACGOVFLGT	ACG OVERFLOW GT. This option specifies the global title to use for requerying when query is blocked by an ACG control. Datafill the GT_VALUE refinement.
	GT_VALUE		GLOBAL TITLE VALUE. Enter one of the following: CAIN_CLID, CAIN_ADDR, or CAIN_FEAT.
		CAIN_CLID	Enter CAIN_CLID to send overflow queries to the SCP associated with the CAIN_CLID_GT global title defined in table C7GTTYPE.
		CAIN_ADDR	Enter CAIN_ADDR to send overflow queries to the SCP associated with the CAIN_ADDR_GT global title defined in table C7GTTYPE.

TERMATT (continued)

Field descriptions (Sheet 4 of 4)

Field	Subfield or refinement	Entry	Explanation and action
		CAIN_FEAT	Enter CAIN_FEAT to send overflow queries to the SCP associated with the CAIN_FEAT_GT global title defined in table C7GTTYPE. Datafill the GT_DIGITS refinement.
	GT_DIGITS	0 to 4095	Enter the digits associated with CAIN_FEAT_GT from table C7GTTYPE.
		VERSION	VERSION. This option controls the CAIN protocol version for outgoing messages.
	VERSION	V0, V1, V2, V3, V4, V5	Enter one of the following values: V0, V1, V2, V3, V4 or V5.
		STREAM	STREAM. This option controls the NetworkBuilder protocol stream.
	STREAM	UCS05, UCS06, UCS07, UCS08, UCS09, UCS11	Enter one of the following values: UCS05, UCS06, UCS07, UCS08, UCS09, UCS11.

TRIGACT=QUERY

When TRIGACT=QUERY, datafill the following refinement:

TRIGACT=QUERY refinement datafill

Refinement	Subfield or refinement	Entry	Explanation and action
ERRACT			ERROR ACTION. Enter the action the switch performs in response to a fatal application error associated with the query. Enter one of the following: ROUTE or TREAT.
		ROUTE	ROUTE - indicates that the call attempts to route in the event of a fatal application error. The switch treats this in the same manner as if it had received an Authorize_Termination message.
		TREAT	TREAT - indicates that the call goes to AINF treatment in the event of a fatal application error.

Datafill example

The following example shows sample datafill for table TERMATT.

MAP display example for table TERMATT

```
TERMATT_KEY  TODIGS  ACTION ERROR_ACTION  OPTIONS
_____________________________________________________
TERMGRP  XLAADDR  214  214  QUERY  ROUTE (BUFFER) $
```

Table history

UCS14

Added new option, STREAM (SR 60105565).

UCS12

Updated to include editorial changes.

UCS11

Updated the VERSION option to include a new value V5 (AX1373).

UCS09

Added VERSION to option vector (AX0973). Added option ACGOVFLGT to the option vector (AX0976).

UCS08

Feature AX0197 created table TERMATT.

Supplementary information

None.

TERMRTE

Table name

Termination Routing (TERMRTE) table

Functional description

Table TERMRTE is used for direct termination routing to trunks exiting the IEC network. This table is acessed by the terminating switch for NetworkBuilder calls.

Datafill sequence and implications

Datafill table CLLI before datafilling the CLLI subfield in table TERMRTE.

Table control checks the MATCH_TERMRTE_CLLI parameter (in table CAINPARM) to determine if the TERMTRK and CLLI fields in table TERMRTE are required to match an entry in table CLLI.

Datafill table RTEATTR before referencing it in the ATTR_INDEX refinement for RTESEL=SX.

Refer to the *UCS DMS-250 NetworkBuilder Application Guide* for more information.

Data verification is performed on table TERMRTE datafill when the MATCH_TERMRTE_CLLI value is changed.

Table size

0 to 10,000 tuples

TERMRTE (continued)

Field descriptions

The following table describes field names, subfield names, and valid data ranges for table TERMRTE.

TERMRTE field descriptions

Field	Subfield or refinement	Entry	Explanation and action
TERMTRK		1 to 9999	TERMINATING TRUNK. This field contains the terminating trunk number. TERMTRK = 0 is not a valid entry. ***Note 1:*** When the CAIN office parameter MATCH_TERMRTE_CLLI is set to MATCH, the TERMTRK value must be the same as the ADNUM in table CLLI. ***Note 2:*** When MATCH_TERMRTE_CLLI is set to NOMATCH, the TERMTRK value does not need to equal the ADNUM in table CLLI.
ROUTE		see subfields	ROUTE LIST. A ROUTE consists of one subfield: RTESEL; enter up to nine ROUTEs.
	RTESEL	S, SX, or T, **N, SG, ISA**	ROUTE SELECTION. Enter the route selection (S, SX, or T, **N, SG, ISA**). See the following tables for refinement datafill. ***Note 1:*** Enter S or SX as the RTESEL when parameter MATCH_TERMRTE_CLLI is set to MATCH. ***Note 2:*** Enter T as the RTESEL when parameter MATCH_TERMRTE_CLLI is set to NOMATCH.

RTESEL = S

When RTESEL = S, datafill the following:

RTESEL=S refinement descriptions

Refinement	Subfield or refinement	Entry	Explanation and action
CONNTYPE		D	CONNECTION TYPE. Enter the type of connection. The only valid entry is D.
CLLI		Valid PRI CLLI datafilled in table CLLI	COMMON LANGUAGE LOCATION IDENTIFIER. Enter a valid PRI CLLI.

RTESEL = T

When RTESEL = T, datafill the following:

RTESEL=T refinement descriptions

Refinement	Subfield or refinement	Entry	Explanation and action
EXTRTEID			EXTERNAL ROUTE IDENTIFIER. This field consists of one subfield: TABID.
	TABID		TABLE IDENTIFIER. Enter one of the following table names to indicate where routing information is obtained: OFRT, TOPSAMA, TOPS, EXDGTRTE, TTL4, RRTE, OFR4, OFR3, or OFR2.
		OFRT, EXDGTRTE, RRTE, OFR4, OFR3, or OFR2	Enter the table where routing information is obtained and datafill the KEY refinement.
	KEY	0 to 1023	Enter the number corresponding to the KEY in the appropriate routing table.
		TOPSAMA, or TOPS	Enter the table where routing information is obtained and datafill the KEY refinement.
	KEY	Valid CO datafilled in table TOPSAMA or TOPS	Enter a valid CALL_ORIGINATION corresponding the the KEY in the appropriate routing table.

TERMRTE (continued)

RTESEL=T refinement descriptions

Refinement	Subfield or refinement	Entry	Explanation and action
		TTL4	Enter the table where routing information is obtained and datafill the KEY refinement.
	KEY	0 to 7	Enter the number corresponding to the KEY in the appropriate routing table.

RTESEL = SX

When RTESEL = SX, datafill the following:

RTESEL=SX refinement descriptions

Refinement	Subfield or refinement	Entry	Explanation and action
CLLI		Valid PRI CLLI datafilled in table CLLI	COMMON LANGUAGE LOCATION IDENTIFIER. Enter a valid PRI CLLI.
ATTR_INDEX		a valid entry in table RTEATTR	INDEX TO TABLE RTEATTR. Enter a valid key to table RTEATTR.

Datafill example

The following example shows datafill for table TERMRTE when the MATCH_TERMRTE_CLLI parameter is set to MATCH.

```
TERMTRK ROUTE
---------------------
220 (S D DAL220TWDTGS) $
2801 (SX EAN841C7DR00 SS7RTE) $
```

The following example shows datafill for table TERMRTE when the MATCH_TERMRTE_CLLI parameter is set to NOMATCH.

```
TERMTRK ROUTE
---------------------
220 T (OFRT 1) $
```

The following example shows datafill for table TERMRTE when TERMRTE has the N-selector as an option when datafilling the RTESEL vector of the ROUTE field.

```
TABLE: TERMRTE
----------------------
77 (N D IMT771C7LPN4 6 213230444 Y) $
```

The following example shows datafill for table TERMRTE when TERMRTE has the SG selector as an option when datafilling the RTESEL vector of the ROUTE field.

```
TERMTRK ROUTE
----------------------
1020 (SG RND 5 INTLRTNKS 0) $
INTLRTNKS (INTLRTNK1) (INTLRTNK2) (INTLRTNK3) (INTLRTNK4)
(INTLRTNK5) $
```

Table history

UCS17

Table TERMRTE was enhanced to include the N, SG, and ISA selectors to allow for enhanced routing paths for NetworkBuilder (CAIN) calls, (A59038201).

UCS07

Selector SX is added to the RTESEL subfield.

UCS05

Table TERMRTE is created.

TFANINT

Table name

Traffic Separation Intersection Table

Overview

The traffic separation intersection tables contain tables TFANINT and OCCTSINT.

The traffic separation measurement system (TSMS) uses table TFANINT to separate calls according to type of call. The TSMS separates calls at the intersection of specified source and destination traffic separation numbers.

The equal access traffic separation measurement system (EATSMS) uses table OCCTSINT to separate calls according to local access and transport area (LATA) and state attributes. The EATMSMS separates calls at the intersection of specified carrier and carrier trunk group traffic separation numbers.

The TSMS and EATSMS do not function together.

Functional description

The use of table TFANINT in a DMS office can occur with TSMS. This condition occurs when the operating company must separate traffic according to the type of call.

The TSMS allows the operating company to separate direct dialed (DD), operator assisted (OA), and no prefix (NP) calls. The operating company can separate these calls for a maximum of 2048 traffic separation intersections.

The traffic separation numbers of the source and destination of the call index each entry in table TFANINT. The source can be a line or a trunk. The destination can be a line, trunk, announcement, or tone.

For each source traffic separation number and destination traffic separation number, table TFANINT has three registers. These registers correspond to the three types of calls, DD, OA, and NP. Each register contains a number that is an index to operational measurements (OM) group TFCANA.

For example, a caller can make a DD call from a line with a traffic separation number of 5. The caller makes this call to a trunk with a traffic separation number of 7. When this action occurs, the TSMS indexes the tuple in table TFANINT with field TFANIN = 5 and field TFANOUT = 7. The TSMS locates the DD register number that field DDREGNO specifies. The system uses this register number to increase the call count or to measure setup or connection use. Use the CI command OMSHOW or TFAN to view this data.

The assignment of source traffic separation numbers occurs in field TRAFSNO of table TRKGRP for incoming and two-way trunk groups. The assignment of source traffic separation numbers occurs in field TRAFSNO of table LINEATTR for line attributes.

The assignment of destination traffic separation numbers occurs in field TRAFSNO of the following tables:

- table TONES for tones
- table ANNS for announcements
- table LINEATTR for line attributes
- table TRKGRP for outgoing and two-way trunk groups

For a two-way trunk group or a line attribute, the source traffic separation number equals the destination traffic separation number.

Datafill sequence and meaning

Enter data in the following tables before you enter data in table TFANINT:

- ANNS
- TRKGRP
- TONES
- LINEATTR

Table size

0 to 2047 tuples

The system dynamically allocates memory. The system uses an average of 14 words of store for each tuple. You can assign the tuples in order. For example, tfanin/tfanout 1 0, 2 0, 3 0, 4 0. When you perform this action, the system uses an average of 8 words of store for each tuple.

TFANINT (continued)

Datafill

Datafill for table TFANINT appears in the following table.

Field descriptions

Field	Subfield or refinement	Entry	Description
INDX		see subfields	*Index*. This field contains subfields TFANIN and TFANOUT.
	TFANIN	0 to 127	*Source traffic separation number*. Enter the source traffic separation number assigned to the intersection. The maximum number of source traffic separation numbers you can specify is 127. If you specify this number, storage restrictions limit the maximum of destination traffic separation numbers you can specify to 125.
	TFANOUT	0 to 127	*Destination traffic separation number*. Enter the destination traffic separation number assigned to the intersection. The maximum number of destination traffic separation numbers you can be specify is 127. If you specify this number, storage restrictions limit the maximum number of source traffic separation numbers you can specify to 125.
DDREGNO		0 to 2047	*Direct dial register number*. Enter the register number assigned to the intersection for a peg count of DD calls. You can enter a number from 1 to 2047. If you do not require a peg count of DD calls, enter 0. The number you enter cannot exceed the value of office parameter NO_TFAN_OM_REGISTERS in table OFCENG. The maximum value for NO_TFAN_OM_REGISTERS is 2047.

Field descriptions

Field	Subfield or refinement	Entry	Description
OAREGNO		0 to 2047	*Operator assisted register number*. Enter the register number assigned to the intersection for a peg count of OA calls. You can enter a number from 1 to 2047. If you do not require a peg count of OA calls, enter 0. The number you enter cannot exceed the value of office parameter NO_TFAN_OM_REGISTERS in table OFCENG. The maximum value for NO_TFAN_OM_REGISTERS is 2047.
NPREGNO		0 to 2047	*No prefix register number*. Enter the register number assigned to the intersection for a peg count of NP calls. You can enter a number from 1 to 2047. If you do not require a peg count of NP calls, enter 0. The number you enter cannot exceed the value of office parameter NO_TFAN_OM_REGISTERS in table OFCENG. The maximum value for NO_TFAN_OM_REGISTERS is 2047.

Datafill example

Datafill for table TFANINT appears in the following description.

The first entry is for an incoming local trunk group. This group has source traffic separation number 7. The first entry is also for an outgoing local trunk group. This group has destination traffic separation number 9. The required peg counts are for NP calls. The NP register has the register number 1 assigned.

The second entry is for flat rate lines. These lines have source traffic separation number 8. The second entry is also for an outgoing-to-Traffic Operator Position System (TOPS) trunk group. This trunk group has destination traffic separation number 12. The DD calls (1+) have register number 4 assigned. The OA calls (0+) have register number 5 assigned. The operator calls (0-) have register number 6 assigned.

Sample datafill for table TFANINT appears in the following example.

TFANINT (end)

MAP example for table TFANINT

```
      INDX DDREGNO OAREGNO NPREGNO

_____________________________________________________________________

    7    9      0        0       1
    8   12      4        5       6
```

Table history

NCS17

Additional information added to table history, CSP03 section with CSR (Q00425985).

CSP03

The following changes were made in CSP03:

- Reference to table DATASIZE was removed. This table does not include TFANINT any longer. Information about store allocation was added to table DATASIZE.
- Reference to NORESTARTSWACT was removed. This reference was removed because activation is immediate.
- In instances where a register number is assigned, then reassigned to a new function, a MTCSWACTRELOAD is required to fully initialize the new register datafill information. The MTCSWACTRELOAD removes all software links to the register's previous assigment.
- The ranges of fields TFANIN and TFANOUT were changed to 0 to 127.
- Reference to office parameters TFAN_IN_MAX_NUMBER and TFAN_OUT_MAX_NUMBER was removed.

BCS36

A reference to the NORESTARTSWACT utility was added in BCS36.

TIMEODAY

Table name

Time of Day Table

Functional description

This table defines the time-of-day (TOD) result for a specified TOD system and day type (field DAYTYPE).

The Time of Day (TOD) feature is available in switching units with the following software packages:

- Integrated Business Network (IBN) Time of Day Routing (software package NTX433AA)
- IBN Time of Day Network Class of Service (NCOS) (software package NTX434AA)
- International Switching Units With Time of Day Routing (software package NTX488AA)
- DMS-300 switching units with Time of Day and Percentage Routing (software package NTX295AA)
- Network Advice of Charge (NAOC) Tariff and Time of Day Switchover

Feature BC1459 (Partitioned Table Editor) can be present in an IBN switch. If this feature is present, tables DATAOWNR and OWNTAB define the ownership of each tuple in this table. These tables define the tuples in the following way:

- The entries in table DATAOWNR that apply to table TIMEODAY have field TABNAME equal to the entry in field TODNAME. For these entries, the two fields equal the value of field TODNAME in this table.
- The entry in table OWNTAB that applies to this table is the entry with the entry in field TABNAME equal to TIMEODAY.

See table TODHEAD for additional information.

Datafill sequence and meaning

Enter data in the following tables before you enter data in table TIMEODAY:

- CARNAME
- RESNAME
- TARFINDX
- TODHEAD
- DAYTYPES

If the International DMS-100 Metering System is present in the switch, enter data in table LNETWORK. Enter data in this table before you enter data in table TIMEODAY.

If the IBN TOD NCOS Screening System is present in the switch, enter data in tables COSMAP and CUSTHEAD. Enter data in these tables before you enter data in table TIMEODAY.

If the IBN and DMS-300 TOD and Percentage Routing System in present in the switch, enter data in table IBNRTE. Enter data in this table before you enter data in table TIMEODAY.

Table size

0 to 16 640 tuples

Datafill

Datafill for table TIMEODAY appears in the following table.

Field descriptions (Sheet 1 of 3)

Field	Subfield or refinement	Entry	Description
TCOINDX		0 to 15	*Tariff of charge index* This is value used for tariff indexing. This value overrides the index from table TODHEAD for the time period that starts with the actual TCO. THe TCOINDX must already be in table TARIFINDX forthis carrier. Enter the information for this field to activate the NAOC feature.
TODNAME		alphanumeric (1 to 8 characters)	*Time of day name* For the IBN or DMS-300 TOD Percentage Routing system, enter the name assigned to the TOD system. A minimum of one entry in table IBNRTE for an IBN switch is assigned this name. Tables OVR0-9 for a DMS-300 switch is assigned this name. This value contains the carrier/reseller name (name must be the same as the one entered in table TODHEAD and in either table CARNAME or RESNAME.

TIMEODAY (continued)

Field descriptions (Sheet 2 of 3)

Field	Subfield or refinement	Entry	Description
			For the IBN TOD NCOS screening system, enter the name assigned to the TOD system. The customer group in table CUSTHEAD with the option TODNCOS has this name assigned. For the International TOD DMS-100 Metering System, enter the name assigned to the TOD system.
DAYTYPE		alphanumeric (1 to 8 characters)	*Day type*. Enter the day type assigned to this TOD and Percentage Routing entry. Table DAYTYPES must already define the day type.
TIME		see subfields	*Time*. This field contains subfields HOUR and MINUTE.
	HOUR	0 to 23	*Hour*. Enter the starting hour for the TOD result.
	MINUTE	0 to 59	*Minute*. Enter the starting minute for the TOD result.
DATA		see subfield	*Data*. This field contains subfield TODTYPE.
	TODTYPE	MTR, RTE, or blank	*Time of day type* For the TOD DMS-100 Metering System, enter MTR. Enter data in refinements NETWORK and TNTNUM. For the IBN or DMS-300 TOD Percentage Routing System, enter RTE (route). Enter data in refinement TIME.
	LNETNAME	alphanumeric (1 to 8 characters)	*Logical metering network*. If the entry in subfield TODTYPE is MTR, enter data in this refinement. Enter the character logical metering network name assigned to this TOD DMS-100 metering system entry. Assignment of this name occurs in table LNETWORK.

Field descriptions (Sheet 3 of 3)

Field	Subfield or refinement	Entry	Description
	TNTNUM	alphanumeric (1 to 8 characters)	*Tariff number table number*. If the entry in subfield TODTYPE is MTR, enter data in this refinement. Enter the number of the tariff number table number that applies to the entry. Table MTARFNUM defines the TNTNUM, field TABLEKEY.
COSMAP		alphanumeric (1 to 16 characters)	*Class-of-service mapping*. If the entry in subfield TODTYPE is NCOS, enter data in this refinement. Enter the class-of-service name assigned to TOD NCOS screening. This name must already be assigned to the customer group in table CUSTHEAD with the option TODNCOS.
TIME		0 to 9 A to F	*Integrated Business Network time range*. If the entry in subfield TODTYPE is RTE, enter data in this refinement. Enter the time range that applies to the entry.

Datafill example

Five examples of datafill for table TIMEODAY follow.

Example 1

This example sets up a charge for the IBN or DMS-300 TOD System. Different routing occurs for weekdays, Saturdays, Sundays, statutory holidays and public service (PS) holidays.

The example indicates the rates that the operating company charges for the different times and day types. These rates are as follows:

- full rate on weekdays from 08:00 to 18:00
- 1/3 off in the evening
- 2/3 off 11:30 to 08:00

The TOD system does not provide the charge. The charge appears as an example of charging.

TIMEODAY (continued)

In this example, the final entry in each tuple indicates the price rate:

- 0 indicates two-thirds off or night-owl rate
- 1 indicates full rate
- 2 indicates one-third off or evening rate
- 3 indicates one-half off
- 4 indicates 60% off

The first tuple is two-thirds off. This tuple has field TIME set to 0. The second tuple is full rate. The third tuple is one-third off. The fourth and fifth tuples are two-thirds off. The sixth tuple is one-third off. This tuple is for Saturday from 8:00 to 18:00. The seventh and eighth tuples are two-thirds off. The ninth tuple is a statutory holiday and is half-off. The tenth tuple is a PS holiday and is 60% off.

MAP example for table TIMEODAY

```
TODNAME DAYTYPE   TIME                DATA
_______________________________________________________
LONTODN WEEKDAY   0  0          RTE     0
LONTODN WEEKDAY   8  0          RTE     1
LONTODN WEEKDAY  18  0          RTE     2
LONTODN WEEKDAY  23 30          RTE     2
LONTODN  SATDAY   0  0          RTE     0
LONTODN  SATDAY   8  0          RTE     0
LONTODN  SATDAY  18  0          RTE     2
LONTODN  SUNDAY   0  0          RTE     0
LONTODN STATHOL   0  0          RTE     3
LONTODN   PSHOL   0  0          RTE     4
```

Example 2

The following example of percentage routing allows the redirection of all or a percentage of overflow traffic. The system can redirect overflow traffic for specified routes through other off-peak switches. This action allows the system to maintain the level of service to the customer at all times of the day.

TIMEODAY (continued)

The simultaneous times in the different time zones for the United Kingdom (UK), United States (US), and Hong Kong (HKG) appear in the following table.

Example of time zones for table TIMEODAY

UK	USA	HKG
08:00	03:00	20:00
12:00	07:00	00:00
16:00	11:00	04:00
19:00	14:00	07:00
00:00	19:00	12:00

The UK and HKG operating companies can agree to route the overflow USA/CANADA traffic from 12:00 to 19:00 through HKG. The UK operating company can route this traffic when the HKG time zone is OFF-PEAK and the equipment is under-used. This feature provides routing flexibility for maximum equipment use of calls through DMS-300.

The routing of a percentage of the USA/CANADA traffic on weekdays through HKG appears in the following example. This routing occurs during the HKG off-peak time (00:00 - 07:00).

MAP example for table TIMEODAY

```
TODNAME DAYTYPE   TIME                DATA
_____________________________________________________
  US300 WEEKDAY  12  0            RTE   0
  US300 WEEKDAY  16  0            RTE   0
  US300 WEEKDAY  19  0            RTE   1
```

Example 3

Datafill for an IBN TOD NCOS screening entry for a TOD system with the name LONTODN appears in the following example.

TIMEODAY (continued)

MAP example for table TIMEODAY

```
TODNAME DAYTYPE   TIME                DATA
-------------------------------------------------------
LONTODN WEEKDAY   0  0    NCOS NCOSTODMAP
```

Example 4

Datafill for an international TOD DMS-100 metering system for a TOD system with the name CUST03 appears in the following example.

MAP example for table TIMEODAY

```
TODNAME DAYTYPE   TIME                DATA
-------------------------------------------------------
LONTODN WEEKDAY   0  0     MTR  NATIONAL 2
```

Example 5

Datafill that the system can use to route service calls appears in the following example. The way that the system routes these calls differs from normal business hours. An example of a service call is repair service.

The system uses this data to route calls on Monday to Friday from 08:30 to 17:30 to the repair service desk. The system routes calls during the following times to a destination other than the repair service desk:

- from 17:30 to 08:29 on Monday to Friday
- all day Saturday and Sunday

MAP example for table TIMEODAY

```
TODNAME DAYTYPE   TIME                DATA
-------------------------------------------------------
 REPAIR WEEKDAY    0  0              RTE  0
 REPAIR WEEKDAY    8 30              RTE  1
 REPAIR WEEKDAY   17 30              RTE  0
 REPAIR WEEKDAY    0  0              RTE  0
```

MMP12

The TCOINDX field is new to table TIMEODAY. This field activates the NAOC feature.

EUR006

The following values were added to field DATA in EUR006:

- LNETNAME
- TNTNUM

The range of values in field TODTYPE was changed to include MTR or RTE in EUR006.

TMINV

Table name

Trunk Module Inventory Table

Functional description

Table TMINV lists the following assignment data for each trunk module (TM):

- TM module type and number
- floor, row, bay position, and base mounting position of each TM
- frame type and number on which the TM is physically mounted
- network assignments
- product engineering code (PEC) of the TM
- the load name of peripheral module (PM) software
- the set of executive programs required for the TM
- single card conference trunk module (compact)
- single card enhanced digital recording announcement machine (EDRAM)
- analog interface module (AIM)

> ***Note:*** For BCS35 and up, EDRAM control information is stored in table TMINV. Prior to BCS35, this information was stored in table EDRAMINV. For further information, refer to table EDRAMINV.

The peripheral processor executive program lineup maintenance trunk module (MTM) audio tone detectors (MTMATD) support all basic MTM functions, including audio tone detection. The basic MTM functions include all circuits that are provisionable on an MTM or service trunk module (STM), except digital data line cards, dual-tone multifrequency (DTMF) senders, and transmission test trunks.

The MTMATD executive program is designed to replace the MTM250 executive program lineup in a non-DMS-250 environment. All offices supporting Integrated Business Network (IBN) and requiring audio tone detectors must use this executive program lineup instead of the MTM250 executive program lineup. The MTMATD executive program does not support DMS-250 receivers.

The MTMEX executive program for the cabinetized Meridian SL-100 no longer allows package trunk modules (PTM). PTMs have been discontinued by the manufacturer. PTMs that are datafilled as PTMs in table TMINV cause International 101 test lines to fail. PTMs must be datafilled as MTMs to avoid this problem.

TMINV (continued)

For BCS36 and up, a new TM/MTM shelf is introduced. The controller card for the ISM shelf is NTFX42AA; however, the integrated service module (ISM) can be used as an empty shelf, having no controller card or power supply. An empty ISM shelf is used exclusively to host single-card PMs such as conference trunk modules (CTM) and digital trunk modules (DTM).

If the MTM does not use the ISM shelf, the audio tone detector card (NT5X29AC) increases the size of the MTMATD executive program lineup, resulting in the need for an updated version of the MTM processor card. Since the current executive program lineup is close to the maximum storage that is available in the MTM, it is important to check the size of the executive program lineup being used. If the executive program lineup exceeds 2 kbyte, either a new processor card (NT0X70AC) or the NT4X65AB controller card is required. This card increases the executive program store from 2 to 16 kbyte.

If the NT0X70AC processor card or the NT4X65AB controller card is used, the MTM must be loaded with the remote MTM (RMTM) load. This load allows the NT0X70AC processor card and the NT4X65AB controller card to access the extra 14 kbyte of executive program store.

Provisioning EDTUs in MTMs or ISMs

The Enhanced Digital Test Unit (EDTU) provides the functionality of the Transmission Test Trunk (TTT), the Transmission Test Unit (TTU) and/or the Digital Test Unit (DTU). The card code for the EDTU is NT4X45AA and it occupies one slot position in an MTM or an ISM shelf.

The following rules apply to provisioning of EDTUs in MTMs or ISMs:

- The EDTU card has its own load, the downloading is done from the TTP level of the MAP display.
- The EDTU is a four-channel circuit pack. The next slot to the right is left vacant in MTM shelves. In ISM shelves, the next slot to the left is left vacant.

- The TTU- and DTU-based EDTU can be used in MTM or ISM shelves wherever the original TTUs and DTUs were provisioned before the EDTU was introduced.
- The TTT-based EDTU requires an executive program lineup change for the MTM or ISM that the TTT-based EDTU is installed in. In addition, the following provisioning restrictions apply:

  — domestic applications

  – Enter MTMDT in table TMINV field EXEC for the MTM or ISM.

  – Reload the peripheral module.

  Note: If the entry in table TMINV field EXEC is MTMDT, the MTM or ISM does not support the following trunks:

  – office alarm packs NT3X82, NT3X83, NT3X84, NT3X85, NT0X10, and NT2X57

  – digital recorded announcement machines NT1X75, NT1X76, NT1X77, and NT1X79

  – coin receivers NT3X08AA and NT3X08AB

  — international applications

  – Enter IMTMDT in table TMINV field EXEC for the MTM or ISM.

  – Reload the peripheral module.

  Note: If the entry in table TMINV field EXEC is IMTMDT, the MTM or ISM does not support the following trunks:

  – office alarm packs NT3X82, NT3X83, NT3X84, NT3X85, NT0X10, and NT2X57

  – digital recorded announcement machines NT1X75, NT1X76, NT1X77, and NT1X79

  – coin receivers NT3X08AA and NT3X08AB

  – TTTs NT1X90 and NT2X96

Datafill sequence and implications

The following tables must be datafilled before table TMINV.

- NETWORK
- ENCDINV

TMINV (continued)

Table size

0 to 1024 tuples

Memory is automatically allocated in segmented blocks. Each block can accommodate 16 TMs. The maximum number of TMs is 2048. Only 512 conference trunk modules (CTM) can be datafilled.

Datafill

The following table lists datafill for table TMINV.

Field descriptions

Field	Subfield or refinement	Entry	Explanation and action
TMNM		see subfields	*Trunk module number* This field consists of the subfields TMTYPE and TMNO.
	TMTYPE	AIMCTMDTM MTMOAURS MSTMT8ATM 2TM4TM8	*Trunk module type* Enter one of the following trunk module (TM) types: • AIM (analog interface module) • CTM (conference trunk module) • DTM (enhanced digital recording announcement machine [EDRAM] TM) This field must be set to “DTM" for Audiogram Delivery Services (ADS) announcements because ADS announcements are only supported by EDRAM. Refer to the Audiogram Delivery Services-Offer of Service Prompts functionality (ENSV0013) in the Table history section of this document. • MTM (maintenance trunk module) • OAU (office alarm unit) • RSM (remote service module) • STM (service TM) • T8A (gateway TM) • TM2 (TM 30 pair) • TM4 (TM 60 pair) • TM8 (TM 120 pair)

TMINV (continued)

Field descriptions

Field	Subfield or refinement	Entry	Explanation and action
	TMNO	0 to 2047 0 to 255 or 0 to 99	*Trunk module number* Enter the number of the TM datafilled in field TMTYPE. If the entry in field TMTYPE is CTM, DTM, AIM, T8A, TM2, TM4, or TM8, enter a value from 0 (zero) to 2047. If the entry in field TMTYPE is MTM or STM, enter a value from 0 (zero) to 255. If the entry in field TMTYPE is OAU, enter 0 (zero). If the entry in field TMTYPE is RSM, enter a value from 0 (zero) to 99.
FRTYPE		ISME MCAM MCGM MCPM MCSM PCSM RLCM RSE or TME	*Frame type* Enter one of the following frame types: • ISME (Integrated service module equipment) • MCAM (Meridian cabinet auxiliary module) • MCGM (Meridian cabinet general module) • MCPM (Meridian cabinet power module) • MCSM (Meridian cabinet service module) • PCSM (packaged core service module) • RLCM (remote line concentrating module) • RSE (remote service equipment) • TME (TM equipment) • Any entry outside the range of indicated values for this field is invalid.
FRNO		0 to 511	*Frame number* Enter the number of the frame on which the TM is mounted.

Field descriptions

Field	Subfield or refinement	Entry	Explanation and action
SHPOS		0 to 77	*Shelf position* Enter the base mounting position of the TM. If the entry in field TMTYPE is T8A, TM2, TM4, or TM8, enter 04, 18, 32, 51, or 65. If the entry in field TMTYPE is CTM, DTM, or AIM, enter 65. If the entry in field TMTYPE is MTM or STM, enter 65. If the entry in field TMTYPE is OAU, enter 51. If the entry in field TMTYPE is RSM, enter 18, 32, 51, or 65. Any entry outside the range of indicated values for this field is invalid.
FLOOR		0 to 99	*Floor* Enter the floor or remote location where the TM equipment frame is located.
ROW		A to Z or AA to ZZ, (except I, II, O, or OO)	*Row* Enter the row in which the TM equipment frame is located.
FRPOS		0 to 99	*Frame position* Enter the bay position of the TM equipment frame.
LKDATA		see subfields	*C-side link data* For switches that are equipped with the junctored network (JNET), this field consists of subfields NMPAIR and NMPORT. For switches that are equipped with the enhanced network (ENET), this field consists of subfields ENSHELF, ENSLOT, ENLINK, and ENDS30.

JNET switches

For switches that are equipped with the JNET, datafill subfields NMPAIR and NMPORT as described in the following table, then go to field EQPEC, section

TMINV (continued)

"All switches", table "Field descriptions", to continue datafill for table TMINV.

Field descriptions for conditional datafill

Field	Subfield or refinement	Entry	Explanation and action
	NMPAIR	0 to 31	*Network module number* If the entry in field TMTYPE is CTM, DTM, AIM, MTM, OAU, STM, T8A, TM2, TM4, or TM8, enter the network module number assigned to the TM. If the entry in field TMTYPE is RSM, enter 0 (zero).
	NMPORT	0 to 63	*Network module port* If the entry in field TMTYPE is CTM, DTM, AIM, MTM, OAU, STM, T8A, TM2, TM4, or TM8, enter the network module port number assigned to the TM. If the entry in field TMTYPE is RSM, enter 0 (zero). Go to field EQPEC, section "All switches", table "Field descriptions", to continue datafill.

ENET switches

For switches that are equipped with the ENET, datafill subfields ENSHELF, ENSLOT, ENLINK, and ENDS30 as described in the following table, then go to field EQPEC, section "All switches", table "Field descriptions", to continue datafill for table TMINV.

Field descriptions for conditional datafill

Field	Subfield or refinement	Entry	Explanation and action
	ENSHELF	0 to 7	*ENET shelf number* Enter the shelf number to which the PM is assigned.
	ENSLOT	10 to 16 25 to 32 or 13 to 19	*ENET slot number* For the crosspoint slot number of the PM, enter a value between 10 and 16 or 25 and 32. For a DMS SuperNode SE switching unit, enter a value between 13 and 19.

Field descriptions for conditional datafill

Field	Subfield or refinement	Entry	Explanation and action
	ENLINK	0 to 18	*ENET link number* Enter the link on the crosspoint to which the PM is assigned.
	ENDS30	0 to 15	*ENDS30* Enter a value from 0 (zero) to 15 for fiber links. This field defaults to 0 (zero) if the link is a DS-30. All entries must be contiguous from 0 (zero). No entry can be duplicated. Go to field EQPEC, section “All switches”, table “Field descriptions”, to continue datafill.

TMINV (continued)

All switches

For all switches, datafill fields EQPEC, LOAD, and EXECS as described in the following table.

TMINV (continued)

Field descriptions

Field	Subfield or refinement	Entry	Explanation and action
EQPEC		FX4101 FX42AA 1X80AA 1X80BA 1X81AA 1X81BA 2X52AA 2X52AB 2X52AC 2X52AD 2X52AE 2X52AF 2X52AG 2X52AK 2X52AL 2X52AM 2X52AN 2X52AP 2X52AR 2X52CA 2X52CB 2X58AA 2X58AB 2X58AC 2X58AD 2X58AE 2X58AG 2X58AK 2X58AL 2X58AM 2X58AT 2X58AU 2X58BA FX46AA	*Equipment product engineering code* Enter the product engineering code (PEC) of the TM. If the entry in field TMTYPE is CTM, enter 1X81AA or 1X81BA. ***Note:*** NT1X81AA and NT1X81BA must not coexist in the same office. If EQPEC is datafilled as 1X81AA, then 1X81BA must be removed and vice versa. 1X81BA is used for the Japanese market only. If the entry in field TMTYPE is DTM, enter 1X80AA or 1X80BA (EDRAM). For EDRAM applications, enter 1X80AA or 1X80BA. ***Note:*** This field must be set to “1X80AA" for ADS announcements because ADS announcements are only supported by EDRAM. Refer to the Audiogram Delivery Services-Offer of Service Prompts functionality (ENSV0013) in the Table history section of this document. For T8A in DMS-300 offices, enter FX4101, FX42AA, or 2X52CB. For TM2 in DMS-300 offices, enter FX4101 or FX42AA, or 2X52AA or 2X52AE (2X52AA is replaced by 2X52AE). If the entry in the field TMTYPE is AIM, enter FX46AA.

TMINV (continued)

Field descriptions

Field	Subfield or refinement	Entry	Explanation and action
		2X58CA 2X58CB 2X58CC 2X58CF 2152SA 2158SA 2158SB2158SC 6X13AA 7X3001 7X3004 or 7X3501	If the entry in field TMTYPE is TM4, enter FX4101 or FX42AA, or 2X52AB or 2X52AF (entry 2X52AB is replaced by 2X52AF). If the entry in field TMTYPE is TM8, enter FX4101 or FX42AA, or 2X52AC or 2X52AG (entry 2X52AC is replaced by 2X52AG). For Canadian operating company offices with TM8, enter FX4101, FX42AA, or 2X52AP. For Canadian operating company offices with TM2, enter FX4101, FX42AA, or 2X52AM. For Canadian operating company offices with TM4, enter FX4101, FX42AA, or 2X52AN. For private branch exchange (PBX) and IBN offices with T8A and TM8 combinations, enter FX4101, FX42AA, 2X52AG, or 2X52AP. For DMS-300 international gateway offices with T8A, enter FX4101, FX42AA, 2X52AD, or 2X52AR. If the entry in field TMTYPE is MTM, enter FX42AA, or 2X58AA or 2X58CA (2X58CA replaces 2X58AA). For MTM with DRA systems, enter FX4101, FX42AA, 2X58AG, 2X58AK, 2X58AL, or 2X58CB (2X58AK replaces 2X58AG and 2X58CB replaces 2X58AK).

Field descriptions

Field	Subfield or refinement	Entry	Explanation and action
			For Canadian operating company offices with MTM, enter 2X58AL. If the MTM uses the ISM shelf enter FX4101 or FX42AA. For the MTM/Caribbean expansion program (MTM/CEP), enter 2X58CC. If the MTM uses the ISM shelf enter FX4101 or FX42AA. If the entry in field TMTYPE is OAU, enter FX4101, FX42AA, 2X58AB, 2X58AD, or 2X58AF. If the entry in field TMTYPE is RSM, enter FX4101, FX42AA, 2X58AE, 2X58CF. For the STM shelf assembly, enter FX4101, FX42AA, 7X3001, or 7X3004. For the package switch (PTM) shelf assembly, enter FX4101, FX42AA, 7X3501. Any entry outside the range of indicated values for this field is invalid. ***Note:*** The following card codes have been discontinued by the manufacturer by BCS35: NT2X58AA, NT2X58AB, NT2X58AC, NT2X58AD, NT2X58AE, NT2X58AG, NT2X58AK, NT2X58AN, NT2X58AR, NT2X58AS, and NT2X58AW.

TMINV (continued)

Field descriptions

Field	Subfield or refinement	Entry	Explanation and action
LOAD		alphanumeric (vector of up to 8 characters)	*Load* Enter the loadfile name of the PM software.
EXECS		AMTMEX ATMEX CMTMEX DDLCEX IMTMDT IMTMEX MTM250EX MTM300 MTMATD MTMDT MTMEX MTMTTT OAUEX T8A300 T8AEX TANEX TM2EX TM4EX TM8EX, UKECEX, UKMTM or UKTMEX	*Executive programs* Enter the set of executive programs required for the TM.

TMTYPE = any entry other than CTM, DTM, or AIM

If the entry in field TMTYPE is any entry other than CTM, DTM, or AIM, datafill is complete for table TMINV after entering SHELF in field TMVARIANT as described in the following table.

TMTYPE = CTM or DTM

If the entry in field TMTYPE is CTM or DTM, datafill additional refinement TMVARIANT as described in the following table.

Field descriptions for table TMINV conditional datafill for a single card TM

Field	Subfield or refinement	Entry	Explanation and action
	TMVARIANT	SINGLE_ CARD	*Trunk module location* Enter SINGLE_CARD if the TM is a single card TM (only CTM and DTM are single card TMs) and datafill refinements LOC_TM_TYPE, LOC_TM_NUMBER, and LOC_SLOT_NUMBER. Otherwise, enter SHELF. No other datafill is required. The corresponding prompt for this field is TM_SELECTOR_TYPE.
	LOC_TM_ TYPE	MTM MMA STM or NIL	*Single card trunk module location: host module shelf type* If the entry in field TMTYPE is CTM, enter MTM or STM. If the entry in field TMTYPE is DTM, enter MTM, MMA, or STM.
	LOC_TM_ NUMBER	0 to 2047	*Single card trunk module location: host module shelf number* Enter the external PM number of the shelf containing the CTM or DTM. The default value for this field is 0 (zero).
	LOC_SLOT_ NUMBER	0 to 37	*Single card trunk module location: card position* Enter the card position, or slot number, within the shelf of the CTM or DTM. The default value for this field is 5.

TMINV (continued)

TMTYPE = AIM

If the entry in field TMTYPE is AIM, datafill additional refinement TMVARIANT as described in the following table.

Field descriptions for table TMINV conditional datafill for two card TM

Field	Subfield or refinement	Entry	Explanation and action
	TMVARIANT	COMPACT	Enter COMPACT if the TM is a two card TM (only AIM is a two card TM) and datafill refinements LOC_TM_TYPE, LOC_TM_NUMBER, LOC_SLOT_NUMBER, and B_CARD_EQUIPMENT. Otherwise, enter SHELF. No other datafill is required. The corresponding prompt for this field is TM_SELECTOR_TYPE.
	LOC_TM_ TYPE	MTM TM or NIL	*Two card trunk module location: host module shelf type* If the entry in field TMTYPE is AIM, enter MTM or TM. The default value for this field is NIL.
	LOC_TM_ NUMBER	0 to 2047	*Two card trunk module location: host module shelf number* Enter the card position, or slot number, within the shelf of the AIM. The default value for this field is 0.
	LOC_SLOT_ NUMBER	0 to 37	*Two card trunk module location: card position* Enter the card position, or slot number, within the shelf of the AIM. The default value for this field is 5.
	B_CARD_ EQUIPMENT	FX48AA FX15AA	*Equipment code of AIM card B (mate card)* Enter FX48AA or FX15AA.

Datafill example

The following example shows sample datafill for table TMINV.

MAP display example for table TMINV

```
           TMNM FRTYPE FRNO SHPOS FLOOR ROW FRPOS LKDATA  EQPEC LOAD
EXECS                SCTMLOC
_____________________________________________________________________________

       MTM    0   PCPM    0    32     0   A     0   0 55 7X3501 MTMKA02
MTMEX                    SHELF

       MTM    1   PCPM    0    18     0   A     0   3 27 7X3501 MTMKA02
MTMEX                    SHELF

       STM    0   PCSM    0     4     0   C     4   0  7 7X3004 MTMKA02
MTMEX                    SHELF

       STM    1   PCSM    0     4     0   C     4   2  4 7X3004 MTMKA02
MTMEX                    SHELF

       DTM    0   PCPM    0    51     0   C     4   0 25 1X80AA EDRMAC07
MTMEX              SINGLE_CARD  MTM    4 10

       DTM    1   PCPM    0    51     0   C     4   0 26 1X80AA EDRMAC07
MTMEX              SINGLE_CARD  MTM    4 11
       AIM    1   MTM     0    12     3   D     1   0 55 FX46AA MTMKA02
MTMEX              COMPACT      MTM    4 12                FX48AA AIMKA01
```

Table history

CSP17

Removed FX4101 from the list of valid EQPEC values for a TMTYPE of MTM.

TL06

Added information for AIM and for NT1X80BA and NT1X81BA cards.

NA005

Feature AN1542 in the functionality Audiogram Delivery Services-Offer of Service Prompt functionality (ENSV0013) introduces announcements that are only suppported by EDRAM. The TMTYPE subfield and the EQPEC field are updated to reflect this requirement.

TMINV (end)

CSP05

The following changes were made to table TMINV:

- added information about provisioning EDTUs in MTMs and ISMs
- added entries MTMDT and IMTMDT to field EXEC for EDTUs

BCS36

The following changes were made to table TMINV:

- deleted all references to trunk module type TRCC
- added value ISME (integrated service module equipment) to field FRTYPE and PEC entries FX4101 and FX42AA to field EQPEC, and modified section “Functional description of table TMINV" in accordance with feature AR0918
- deleted all references to value AVTMEX in field EXECS

TKCVDATA

Table name

Mass Trunk Conversion Data Table

Functional description

Table TKCVDATA helps operating companies minimize the time and effort to convert per trunk signaling (PTS) trunks to ISDN user part (ISUP) trunks, thereby utilizing the Common Channel Signaling 7 (CCS7) protocol. This table enables the operating company to see what new trunks and trunk groups are created, and can also be used to detect datafill errors.

If the old trunk group is large, the best approach is to split the trunk group into two records. This ensures that the old trunk group can be converted without taking the whole trunk group out of service. During datafill process, it is important that the circuit identification code (CIC) for each trunk is identical at the end switching units. For all Signaling System 7 (SS7) trunks in a switching unit, the CIC must be unique for every destination point code (DPC). Currently, since there are no rules for naming the trunks at the end switching units, the datafill process can be complicated if the external trunk numbers are not aligned at the end switching units.

To determine the CIC assigned to an ISUP trunk, use the following formula:

$C(x) = n(x) + s - e$

where

C(x)
is the circuit identification code (CIC) for trunk member x

n(x)
is the external number for trunk member x in the new trunk group

s
is the starting CIC for the set of ISUP trunks in the TKCVDATA record. This is the CIC given to the first ISUP trunk in the set

e
is the starting external number for the set of trunks in the new trunk group

Since the external trunk number of the new group determines the CIC value, this assignment ensures that the external trunk numbers of the new group are aligned at the end switching units.

If there are any undatafilled PTS trunks in the record, they appear in the new trunk group as well. There can be some unused CICs. To avoid the holes in

the CICs assigned, the records must be constructed to contain only datafilled trunks.

The records must be datafilled so that the CICs are identical for the trunks at the end switching units. The datafill process is straightforward if the external numbers are identical for the trunks at the end switching units. Two examples are given, at the end of this section, to indicate how the datafill differs depending on the alignment of the external trunk numbers for the trunks at the end switching units.

Record verification

Each record is verified during datafill and before the conversion is allowed. This verification process checks each of the following rules:

- Both trunk group common language location identifiers (CLLI) are for trunk groups.
- The two trunk group CLLIs are not the same.
- The corresponding subgroup tuples exist in table TRKSGRP for the ISUP trunk group that are in the PTS trunk group.
- The PTS trunk specified by the value in field OSTRTMEM exists (only if not attempting a retry).
- The PTS trunk specified by the value in field OLASTMEM exists (only if not attempting a retry).
- The PTS trunks are on a peripheral module that is specified in table LTCINV as a CCS7 peripheral.
- The set of ISUP trunks datafilled do not exist (only if not attempting a retry), but are valid trunk members.
- The CIC for each new ISUP trunk is not used (only if not attempting a retry), but each is a valid CIC.

The following verifications are already done by standard table control:

- The PTS trunk group CLLI exists.
- The ISUP trunk group CLLI exists.
- The TRKCIC value is within the valid range.
- The selector is CIC.

The overlay of ranges between records is not verified. This can be done manually after all the entries have been added to table TKCVDATA.

TKCVDATA (continued)

The subgroup information is retained in the new ISUP trunks after the conversion. Each new ISUP trunk stays in the subgroup it was in when it was a PTS trunk. The data in each record specifies a block of PTS trunks for conversion.

MAP level TRKCONV commands

MAP (maintenance and administrative position) level TRKCONV provides the commands to act on the posted record. The commands available are as follows:

- CVPOST: posts the requested record or records.
- CVBSY: busies out the trunks in the posted record or records. When this command is issued, an alarm goes off when the defined threshold is reached.
- CONV: converts the PTS trunks to ISUP trunks by updating trunk tables.
- CVRTS: brings the trunks into service.
- CVNEXT: displays the next record if more than one record was requested by the CVPOST command.
- CVCOT: runs the continuity test on the trunks.
- UNDO: converts the ISUP trunks back to PTS trunks. This command is not used unless there is something wrong with the conversion process.
- RCLLI: renames the ISUP trunk CLLI to the corresponding PTS trunk CLLI. The PTS trunk CLLI is renamed to a dummy CLLI. This command precludes the use of the UNDO command. This command also changes the conversion status field to LOCKED.
- AUTOCNV: (only with package NTXV25AA [JPN Auto Mass Trunk Conversion]) specifies the particulars of the automatic trunk conversion process.

Procedure for manual conversion process

Only one person at one of the affected switching units should perform the conversion process. This person must have access to a remote MAP terminal for the other switching unit involved. A hard copy of table TRKMEM and C7TRKMEM should be taken before the conversion process is started, as a precaution.

The procedure for switching units involved in the process is described below.

1. Check that the switching unit has datafill for CCS7 signaling. If this datafill does not exist, datafill the following tables:
   - C7NETWRK
   - C7LKSET
   - C7LINK
   - C7RTESET
   - IPMLINV (only if message switch and buffer 7 [MSB7] signaling is used)
   - LTCINV (to update field OPT_ATTR as a CCS7 peripheral module)
2. Check if the ISUP trunk group data exists. If it does not exist, perform the following procedure:
   a. Add entry to table TRKGRP.
   b. Add entries to table TRKSGRP.
   c. Add entries to table ISUPDEST.
   d. Add translation and routing data for the new ISUP trunk group.
3. Select a block of trunks from a PTS trunk group to convert in consultation with the other switching unit.
4. Add entry to table TKCVDATA for this block of PTS trunks. Various data verifications must be done before this entry can be added in table TKCVDATA (for example, all the PTS trunks reside on a #7 digital trunk controller [DTC]).
5. Set the read-only field CSTATUS to INITIAL.
6. Repeat steps 3 to 5 for any additional blocks of trunks.
7. Go into the TRKCONV MAP level by issuing the following command:

   ```
   > MAPCI;MTC;TRKS;TTP;LEVEL TRKCONV
   ```

8. Post the record or records agreed on with other switching unit using the CVPOST command. The records posted at both switching units must contain the same trunks.
9. Enter the CVBSY command with the INB option. This changes the state of all the PTS trunks to offline. Log reports are generated for any of the trunks that do not change to the offline state. Correct these logs before continuing.

TKCVDATA (continued)

10. If any of the trunks are in the CPB state, take one of the following actions:
    - Wait for the trunks to go idle, then change them to the offline state using the CVBSY INB command.
    - Go on to another record and come back to this record later.
    - Break the record up into smaller records and isolate the CPB trunks.
11. Ensure that the other switching unit has also issued the CVBSY INB command for the same set of trunks.
12. When all the trunks in the record are in the INB state, the CONV (convert) command can be issued. To convert a record, enter the following command:

    ```
    > CONV
    ```

    To convert a set of records, enter the following command:

    ```
    > CONV ALL
    ```
13. The conversion status changes to RUNNING only if the data verifications pass. Otherwise, the command is exited. If the record fails the verification, a verification failure message is displayed on the user's terminal and the command is exited.
14. If the conversion status changes to FAILURE after the command is completed, this indicates that some of the PTS trunks were not converted. Log reports are generated for the trunks that were not converted.
15. If the conversion status changes to COMPLETE after the CONV command is completed, this indicates that all PTS trunks were converted.
16. Ensure that the other switching unit has also converted the same set of trunks.
17. Process all logs generated by the CONV command before proceeding.
18. If the switch is a DMS, issue the CVBSY command. This changes the state of the ISUP trunks to the manual busy state, which is necessary since continuity tests can only be done on trunks in the manual busy or idle states. If the switch is not a DMS, prepare the trunks for continuity tests. Note that the continuity test can only be initiated on outgoing trunks (DMS).

19. The following steps should be performed at the switching unit containing the trunks that are outgoing or two-way:
    - Notify the other switching unit when you are about to start the continuity test. To do this, enter one of the following commands:

      ```
      > CVCOT
      ```

      or

      ```
      > CVCOT ALL
      ```
    - If log reports were generated from the continuity tests, they must be corrected in conjunction with the other switching unit.
    - Rerun the CVCOT command if errors existed after the log reports were corrected.
    - When the CVCOT command has completed successfully, bring the new trunks into service by using the CVRTS command.
    - Inform the other switching unit to bring the corresponding ISUP trunks into service.
    - Verify the performance of the new ISUP trunks.
    - This completes the conversion for this record.
20. When the conversion is complete and the PTS trunks are converted successfully, delete the tuples from table TKCVDATA.

Failure conditions for the manual conversion process

The following procedure is for handling error conditions if the CVCOT command results in several logs.

1. The operating company personnel have the option of fixing the errors or reversing the conversion process. The conversion process can be reversed only if the following conditions are valid.
    - The PTS trunk group data still exists.
    - The conversion status is not set to LOCKED as a result of running the RCLLI command.
2. If the above conditions are met, issue the UNDO command. This deletes the ISUP trunks from tables C7TRKMEM and TRKMEM, and adds the PTS trunks to table TRKMEM.

If a restart occurs during the conversion process, it can result in loss of data. If the data loss cannot be recovered by the software, it is up to the operating company personnel to correct the data inconsistency manually.

TKCVDATA (continued)

Renaming the ISUP trunk CLLI to the PTS trunk CLLI

This optional procedure is used if the operating company wishes to reuse the old PTS trunk group CLLI as the ISUP trunk group CLLI (the conversion cannot be reversed with the UNDO command after the ISUP CLLI is renamed).

1. Access the TRKCONV MAP level.
2. Enter the following command:

   ```
   > RCLLI <isup CLLI> <pts CLLI>
   ```

   This changes the CLLI for the ISUP trunk group to the PTS CLLI if the PTS trunk group has no more members and its group data still exists.
3. The PTS CLLI is renamed to a dummy CLLI and it is displayed on the user's terminal if the command was successful. All the records containing either CLLI have the status changed to LOCKED.
4. Remove all the translations for the renamed PTS trunk group.
5. Remove the trunk group data for the renamed PTS trunk group.

The algorithm for assigning the dummy CLLI is as follows: The CLLI name is broken up into two parts -- a string of characters and a numeric part (for example, OLDPTS123). The numeric part is assigned sequentially as required.

Restrictions and limitations

Restrictions and limitations concerning datafill of table TKCVDATA are as follows:

- The PTS trunks must be on a peripheral module specified as a CCS7 type.
- Only PTS trunks on digital trunk controllers (DTC), line trunk controllers (LTC), and PCM30 DTCs (PDTC) can be converted to ISUP trunks. No more than 2048 trunk blocks can be specified at a time.
- The CONV, UNDO, and AUTOCNV commands work only if the conversion of PTS trunk members to ISUP trunk members is a one-to-one mapping. If the same PTS or ISUP members are specified in multiple records, the CONV, UNDO, and AUTOCNV commands fail.
- During datafill of table TKCVDATA, no check is made to see if there are any ISUP trunks already datafilled for the range in the record. If there are trunks in the range, it can cause problems when the UNDO command is issued.
- Only the CVPOST, UNDO, RCLLI, and AUTOCNV commands will operate on records of table TKCVDATA with field CONVP set to AUTO.

- The CVPOST command does not allow the user to post a set of records that includes both MAN and AUTO options.
- No check is made to verify that the ISUP trunk group size (as specified by field TRKGRPSIZ in table CLLI) is large enough to accommodate all of the new ISUP members; the operating company personnel must verify that the trunk group size is adequate before trunk conversion is performed.
- Do not schedule or perform external peripheral module (XPM) routine exercise (REX) tests during trunk conversion on affected PMs.
- No check is made to ensure that the trunk group specified in field OLDGRP is a PTS trunk group.
- For records with field CONVP set to AUTO, no check is made to ensure that there is no overlap of trunk members specified in the ranges of OTRKMEM and NTRKMEM.
- Do not perform CM restarts or CM REX during trunk conversion.
- Do not perform an image dump during trunk conversion.
- All ISUP trunk members specified within a record of table TKCVDATA have the same ISUP protocol variant.
- The continuity test performed by the CVCOT command, or during automatic trunk conversion if a continuity test is requested, is dependent on the ISUP trunk type specified in field NEWGRP of the record.
- If the journal file is active, it is updated with the changes to tables TRKMEM, C7TRKMEM, and TKCVDATA during trunk conversion.

Datafill sequence and implications

The following tables must be datafilled before table TKCVDATA:

- CLLI
- C7LINK
- C7LKSET
- C7NETWRK
- C7RTESET
- IPMLINV
- ISUPDEST
- LTCINV
- TRKGRP

TKCVDATA (continued)

- TRKMEM
- TRKSGRP

Table size

Memory is dynamically allocated up to a maximum of 2048 tuples.

Datafill

The following table lists datafill for table TKCVDATA.

Field descriptions

Field	Subfield or refinement	Entry	Explanation and action
RECNUM		numeric (0 to 2047)	*Record number* This field is the key to the table. Enter a record number.
CONVP		MAN or AUTO	*Conversion process* Enter MAN to select the manual conversion process or AUTO to select the automatic conversion process.
DATA		see subfields	*Manual conversion process data* If the value in field CONVP is MAN, this field consists of subfields OLDGRP, OSTRTMEM, OLASTMEM, NEWGRP, NSTRTMEM, NLASTMEM, SIGSEL, and CSTATUS.

CONVP = MAN

If the value in field CONVP is MAN, datafill subfields OLDGRP, OSTRTMEM, OLASTMEM, NEWGRP, NSTRTMEM, NLASTMEM, SIGSEL, and CSTATUS as described below.

Field descriptions for conditional datafill (Sheet 1 of 2)

Field	Subfield or refinement	Entry	Explanation and action
	OLDGRP	alphanumeric (1 to 16 characters)	*Old trunk group* Enter the common language location identifier (CLLI) of the old trunk group that contains the per trunk signaling (PTS) trunks that are being converted to ISDN user part (ISUP) signaling. The entry in field OLDGRP and the entry in field NEWGRP cannot be the same.
	OSTRTMEM	numeric (0 to 9999)	*Old starting trunk member number* Enter the starting external trunk member number of the old trunk group.
	OLASTMEM	numeric (0 to 9999)	*Old last trunk member number* Enter the last external trunk member number of the old trunk group.
	NEWGRP	alphanumeric (1 to 16 characters)	*New trunk group* Enter the CLLI of the new trunk group that contains the ISUP trunks that are being converted from the PTS trunks. The entry in field NEWGRP and the entry in field OLDGRP cannot be the same.
	NSTRTMEM	numeric (0 to 9999)	*New starting trunk member number* Enter the starting external trunk member number of the new trunk group.
	CONTMARK	+	*Continuation mark* Enter + to indicate that additional information for this tuple is contained in the next record.
	NLASTMEM	numeric (0 to 9999)	*New last trunk member number* Enter the last external trunk member number of the new trunk group.

TKCVDATA (continued)

Field descriptions for conditional datafill (Sheet 2 of 2)

Field	Subfield or refinement	Entry	Explanation and action
	SIGSEL	CIC	*Signal selector* Enter CIC (circuit identification code) and complete refinement TRKCIC.
	TRKCIC	numeric (0 to 16383)	*Trunk circuit identification code* Enter the trunk CIC for the trunk member. Each CIC must be unique for each destination point code and mus*t* be the same between the two switching units as well.
	CSTATUS	INITIAL RUNNING FAILURE COMPLETE or LOCKED	*Conversion state* Enter INITIAL. After initial datafill, this field is overwritten by the system and becomes a read-only field that indicates the progress of the conversion.

CONVP = AUTO

If the value in field CONVP is AUTO, datafill subfields OLDGRP, OTRKMEM, NEWGRP, NTRKMEM, SIGSEL, CSTATUS, and OPTION as described below.

Field descriptions for conditional datafill (Sheet 1 of 3)

Field	Subfield or refinement	Entry	Explanation and action
	OLDGRP	alphanumeric (1 to 16 characters)	*Old trunk group* Enter the CLLI of the old trunk group that contains the per trunk signaling (PTS) trunks that are being converted to ISDN user part (ISUP) signaling. ***Note:*** The entry in OLDGRP and the entry in NEWGRP cannot be the same.
	OTRKMEM	see subfields	*Old trunk member* This vector field, which consists of up to six multiples of subfields STRTMEM and ENDMEM, indicates up to six ranges that are used to specify the old trunk members requiring conversion.
	STRTMEM	numeric(0 to 9999)	*Start member* Enter start value for the range.
	ENDMEM	numeric(0 to 9999)	*End member* Enter end value for the range.
	NEWGRP	alphanumeric (1 to 16 characters)	*New trunk group* Enter the CLLI of the new trunk group that contains the ISUP trunks being converted from the PTS trunks. ***Note:*** The entry in field NEWGRP and the entry in field OLDGRP cannot be the same.
	CONTMARK	+	*Continuation mark* Enter + to indicate that additional information for this tuple is contained in the next record.

TKCVDATA (continued)

Field descriptions for conditional datafill (Sheet 2 of 3)

Field	Subfield or refinement	Entry	Explanation and action
	NTRKMEM	see subfields	*New trunk member* This vector field, which consists of up to six multiples of subfields STRTMEM and ENDMEM, indicates up to six ranges that are used to specify the new trunk members requiring conversion.
	STRTMEM	numeric (0 to 9999)	*Start member* Enter start value for the range.
	ENDMEM	numeric (0 to 9999)	*End member* Enter end value for the range.
	SIGSEL	CIC	*Signal selector* Enter CIC (circuit identification code) and datafill refinement TRKCIC.
	TRKCIC	numeric (0 to 16383)	*Trunk circuit identification code* Enter the trunk CIC for the trunk member. Each CIC must be unique for each destination point code and must be the same between the two switching units. To determine the CIC assigned to an ISUP trunk, use the formula provided on the following page.
	CSTATUS	INITIAL RUNNING FAILURE COMPLETE or LOCKED	*Conversion state* Enter INITIAL. After initial datafill, this field is overwritten by the system and becomes a read-only field that indicates the progress of the conversion.

Field descriptions for conditional datafill (Sheet 3 of 3)

Field	Subfield or refinement	Entry	Explanation and action
	OPTION	LPBKDN or NIL	*Option field* If loopback is required, enter LPBKDN to specify the loopback directory number option, and datafill refinement DN. Otherwise, enter NIL.
	DN	numeric (1 to 18 digits)	*Directory number* Specify the loop-back DN for the continuity test.

Datafill example

The following example shows sample datafill for table TKCVDATA.

This is an example of physical connections between two switching units that have the same external trunk numbers assigned, as illustrated in the following figure. This type of configuration only requires that one tuple be added to table TKCVDATA at both switching units. The external trunk numbers and the CLLI are the same at both ends of the channel.

Physical connections between two switching units

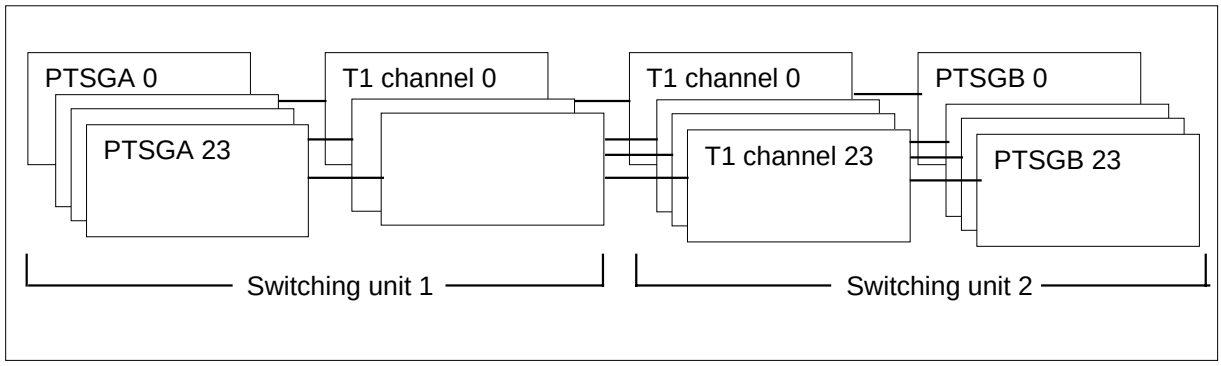

An example of input for switching unit 1 is shown below.

TKCVDATA (end)

MAP display example for table TKCVDATA

```
 RECNUM CONVP
                                                  DATA
_____________________________________________________________
1 MAN
        PTSGA 0 23 NEWGA 10 33 CIC 50 INITIAL
```

An example of input for switching unit 2 is shown below.

MAP display example for table TKCVDATA

```
 RECNUM CONVP
                                                  DATA
_____________________________________________________________
1 MAN
        PTSGB 0 23 NEWGB 10 33 CIC 50 INITIAL
```

Table history

BCS36

Dump and restore was changed.

Supplementary information

Additional information related to table TKCVDATA is provided below.

Dump and restore

As of BCS36, tuples that exist on the dump side in table TKCVDATA are not restored during a BCS upgrade.

TMTCNTL

Table name

Treatment Control (TMTCNTL)

Functional description

TMTCNTL subtables (TMTCNTL.TREAT) are used to define the tones, announcements, and states (IDLE or LOCKOUT) that are returned to the originator of a call when a specified treatment code is encountered during translation of a call.

Treatment codes are a set of switch-defined mnemonics. Refer to the *Description of Treatment Codes* in this section.

A call can terminate in a specified treatment code because supplied translations explicitly lead the call to a specified treatment or because the switch detects certain conditions and prescribes a treatment code without reference to operating telephone company translations. These conditions usually are an abnormal set of circumstances that make it impossible to complete the call (for example, all trunks are busy). Sometimes the treatment code is part of a normal call completion process, for example, an announcement to the originator before the call is completed.

Refer to *Operational Measurements Treatment Categories* in this section for a logical grouping of treatment codes.

When the switch determines, while translating a call, that the call must terminate in a specified treatment code, it accesses the filled subtables TMTCNTL.TREAT to determine what announcement or tone is to return to the originator, or what route in table OFRT lists the sequence of announcements and/or tones to return to the originator.

Since individual TMTCNTL.TREAT subtables do not necessarily list all the possible treatment codes, the switch can access several TMTCNTL.TREAT subtables until it encounters the prescribed treatment code result.

The order of precedence for determining the result of the treatment code is as follows:

1. Look for the treatment code in the subtable at a position relevant to the originator of the call. Refer to `TREATMENT SUBTABLE POSITIONS" in this section for a description of available subtable positions.
2. Failing to find the treatment code as described in Item 1, "Look for the treatment code in the subtable at a position relevant to the originator of the

TMTCNTL (continued)

call. Refer to `TREATMENT SUBTABLE POSITIONS" in this section for a description of available subtable positions." on page -125 above, look for the treatment code in subtable at position OFFTREAT.

3. Failing to find the treatment code as described in Item 1, "Look for the treatment code in the subtable at a position relevant to the originator of the call. Refer to `TREATMENT SUBTABLE POSITIONS" in this section for a description of available subtable positions." on page -125 and Item 2, "Failing to find the treatment code as described in Item 1, "Look for the treatment code in the subtable at a position relevant to the originator of the call. Refer to `TREATMENT SUBTABLE POSITIONS" in this section for a description of available subtable positions." on page -125 above, look for the treatment code in subtable at position OFFTREAT." on page -125 above, look for treatment code RODR in subtable at position OFFTREAT.
4. Failing to find a prescribed result in Item 1, "Look for the treatment code in the subtable at a position relevant to the originator of the call. Refer to `TREATMENT SUBTABLE POSITIONS" in this section for a description of available subtable positions." on page -125, Item 2, "Failing to find the treatment code as described in Item 1, "Look for the treatment code in the subtable at a position relevant to the originator of the call. Refer to `TREATMENT SUBTABLE POSITIONS" in this section for a description of available subtable positions." on page -125 above, look for the treatment code in subtable at position OFFTREAT." on page -125, and Item 3, "Failing to find the treatment code as described in Item 1, "Look for the treatment code in the subtable at a position relevant to the originator of the call. Refer to `TREATMENT SUBTABLE POSITIONS" in this section for a description of available subtable positions." on page -125 and Item 2, "Failing to find the treatment code as described in Item 1, "Look for the treatment code in the subtable at a position relevant to the originator of the call. Refer to `TREATMENT SUBTABLE POSITIONS" in this section for a description of available subtable positions." on page -125 above, look for the treatment code in subtable at position OFFTREAT." on page -125 above, look for treatment code RODR in subtable at position OFFTREAT." on page -126 above, apply IDLE. Dial tone returned to the originator.

Treatment results for lines usually terminated, after the prescribed sequence of announcements and/or tones, in LOCKOUT (line sounds dead to the originator), IDLE (dial tone returned to the originator), or ROH (Receiver Off Hook tone returned to the originator). Calls originated by trunks must never terminate in LOCKOUT, IDLE, or ROH.

For this reason the subtable TMTCNTL.TREAT at position OFFTREAT, which is the last consulted in the order of precedence, must never contain

ROH, IDLE, or LOCKOUT, and it is therefore recommended that the subtable at position OFFTREAT should list treatment results common to all trunk group types. The type of switch determines which of the subtable TMTCNTL.TREAT and treatment codes are used in a specific switch.

For each of the subtables TREAT and treatment codes described in this section, a list of applicable switch types is given. For a switch type that is not listed, the treatment is redundant and is set to overflow or similar tone.

List of switch type

Following is a list of applicable switch types:

- LOCAL

  DMS-100 Local

- TOLL

  DMS-200 Toll

- LOCALTOLL

  DMS-100/200 Combined Local and Toll

- LOCAL/TOLL

  DMS-100 Local, DMS-200 Toll or DMS-100/200 Combined Local/Toll

- AOSS

  DMS with Auxiliary Operator Service System

- TANDEM

  DMS-250 Tandem Switch for Common Carriers

Operational measurements treatment categories

Refer to the *UCS DMS-250 Operational Measurements Reference Manual* for a description of the separation of call treatments into logical categories and the corresponding separation of operational measurement registers into groups TRMTCU, TRMTCU2, TRMTCM, TRMTER, TRMTFR, and TRMTRS.

TRMTCU AND TRMTCU2 - Customer unauthorized treatments

These treatments are used to notify the customer that action is inappropriate for reasons of authorization. This indicates that the customer has dialed an

TMTCNTL (continued)

invalid sequence of digits or has followed improper procedure for the action the customer is performing.

- ADBD

  ANI Not Found In Database
- ANBB

  ANI Feature Group B Blockage
- ANIA

  ANI Account Status Not Allowed
- CACE

  Carrier Access Code In Error
- CCNA

  Calling Card Not Allowed
- CCNV

  Calling Card Invalid
- CNDT

  Coin Denied Termination
- CNOT

  Coin Overtime
- DACD

  Dial Carrier Access Code
- DCFC

  Disallowed Coin Free Call
- DNTR

  Denied Terminating
- DODT

  Denied Originating Data Terminal
- D950

  Dial 950
- FDNZ

  First Digit Not Zero
- FNAL

Feature Not Allowed

- HNPI
  Home NPA Intercept
- IDPB
  IDDD_Prohibited
- ILRS
  Inter Lata Restriction
- INAC
  Invalid Account Code
- INAU
  Invalid Authorization Code
- INCC
  Invalid City Code
- INPD
  Invalid Pin Digits
- IVCC
  Invalid Corridor Call
- LCAB
  Local Call Area Barred
- MSCA
  Misdirected CAMA Call (Prefixed Digit Dialed in Error)
- MSLC
  Misdirected Local Calls (Prefixed Digit Not Dialed)
- NACD
  Do Not Dial Carrier Access Code
- NACK
  Negative Acknowledgement
- NOCN
  No Coin
- NPAR
  NPA_Restricted

TMTCNTL (continued)

- N9DF
  Database Failure
- N9OB
  Number Out Of Band
- N9NS
  Number Not In Service
- N950
  Do Not Dial 950
- NOOB
  NOO Call Blocked
- ORSS
  Originating Service Suspension
- RSDT
  Restricted Date And Time
- TDND
  Toll Denied
- TESS
  Terminating Service Suspension
- TINV
  Temporarily Invalid Authorization Code
- UMOB
  Unregistered Mobile
- UNCA
  Unauthorized CAMA Call
- UNOW
  Unauthorized Outwats Call

TRMTCM - Customer Miscellaneous Treatments

These treatments explain call situations that are attributable to customer action but do not relate to authorization. This does not include treatments used to mark the progress or completion of call features

- ANCT

  Machine Intercept
- ANTO

  Answer Timeout
- ATBS

  Attendant Busy
- ATDT

  ATD Timeout
- BLDN

  Blank Directory Number
- CFWV

  Variable Call Forwarding Verification
- NC8F

  NCS 800 Service Failure
- OPRT

  Regular Intercept
- PDIL

  Partial Dial Timeout
- PSIG

  Permanent Signal Timeout
- TDBR

  Test Desk Bridged
- TRBL

  Trouble Intercept
- UNDN

  Unassigned Directory Number
- UNDT

  Undefined Treatment

TMTCNTL (continued)

- UPAB

  Universal Treatment Blocked
- VACS

  Vacant Speed Number
- VACT

  Vacant Code Treatment
- VCCT

  Vacant Country Code Treatment

TRMTER - Equipment Related Treatments:

These treatments handle failures due to switching equipment malfunction. This does not include treatments used to handle software or hardware resource shortages.

- AIFL

  Auto Identified Outward Dialing Failure
- CONP

  Connection Not Possible
- ERDS

  Trunk Perm Ground
- FDER

  Feature Data Error
- INOC

  Invalid Operator Code
- NCUN

  NCS Unexpected Error
- NMZN

  No Metering Zone
- NONT

  Not On Network
- PNOH

  Permanent Signal No Receiver Off Hook
- PTOF

Permanent Trunk Offering

- RODR

  Reorder

- SCFL

  DBS Communication Failure

- SSTO

  Start Signal Time out

- STOB

  Signal Time Out Boc

- STOC

  Signal Time Out IC or INC

- SYFL

  System Failure

TRMTFR - Feature Related Treatments

These treatments explain call situations that are attributable to a certain call feature, whether POTS, IBN, or other. This does not include treatments that deny access to features because of authorization.

- BUSY

  Busy Line

- CCTO

  Calling Card time Out

- CONF

  Confirm Tone

- MANL

  Manual Line

- MHLD

  Music On Hold

- NCII

  NCS Invalid Id Code

- NCIX

  NCS Incoming Exclusion Ncix

TMTCNTL (continued)

- NINT

  Changed Number Intercept
- ORAC

  Originating Revertive Action For Two Party Line With Coded Ringing
- ORAF

  Originating Revertive Action For Two Party Line With Frequency Ringing
- ORMC

  Originating Revertive Action For Multiparty Lines With Coded Ringing
- ORMF

  Originating Revertive Action For Two Party Line With Frequency Ringing
- PGTO

  Mobile Page Time Out
- RRPA

  Revertive Ringing Prefix Announcement
- SRRR

  Single Party Revertive Ringing
- TRRF

  Terminating Revertive Action For Frequency Ringing

TRMTRS - resource shortage treatments

These treatments handle failures due to shortage of software or hardware resources, indicating an inadequate capacity to handle the presented load. This does not include treatments for switching equipment malfunction.

- CGRO

  Customer Group Resource Overflow
- CQOV

  CAMA Queue Overflow
- EMR 1

  Emergency Treatment 1
- EMR 2

  Emergency Treatment 2
- EMR 3

Emergency Treatment 3

- EMR 4

  Emergency Treatment 4
- EMR 5

  Emergency Treatment 5
- EMR 6

  Emergency Treatment 6
- FECG

  Far End Congestion
- GNCT

  Generalized No Circuit
- NBLH

  Network Blockage Heavy Traffic
- NBLN

  Network Blockage Normal Traffic
- NCRT

  No Circuit
- NECG

  Near End Congestion
- NOSC

  No Service Circuit
- NOSR

  No Storage Overflow
- SORD

  Storage Overflow Reorder
- TOVD

  Toll Overload

Treatment subtable positions

The treatment tables consist of a control table TMTCNTL and treatment subtables TREAT at the following positions.

TMTCNTL (continued)

Office treatments subtable

EXTTMTNM = OFFTREAT

LOCAL, TOLL, TANDEM

The Office Treatment subtable provides a common set of treatments for use by incoming trunks. This subtable should list every treatment. The treatments that are not applicable to incoming trunks are routed to overflow or similar tone.

Treatments in the office treatment subtable must never contain the code for receiver off hook (ROH) in the route list and the route list must never terminate with the codes for lockout (LKOUT) or idle (IDLE).

Intertoll treatments subtable

EXTTMTNM = ITTRKGRP

LOCAL and TOLL

The Intertoll Treatments subtable is optional and is only provided in toll or combined local/toll switches to list the treatments for incoming and two-way intertoll trunk groups, trunk group type IT, that differ from treatments in the office treatments subtable.

Treatments in the Intertoll Treatments subtable should never contain the code for receiver off hook (ROH) in the route list and must never terminate with codes for lockout (LKOUT) or idle (IDLE).

Incoming CAMA treatments subtable

EXTTMTNM = INTRKGRP

LOCAL and TOLL

The incoming CAMA treatments subtable is optional and is only provided in toll or combined local/toll switches to list the treatments for incoming or two-way CAMA/AMR5 trunk groups, trunk group type SC, which differ from the treatments in the office treatments subtable.

Treatments in the incoming CAMA treatment subtable must never contain the code for receiver off hook (ROH) in the route list and the route list must never terminate with codes for lockout (LKOUT) or idle (IDLE).

Local incoming trunk treatments subtable

EXTTMTNM = TITRKGRP

LOCAL and TOLL

The local incoming trunk treatments subtable is an optional subtable and is only provided in a combined local/toll switching unit to list the treatments for incoming and two-way local trunk groups that differ from the treatments in the office treatments subtable.

Treatments in the local incoming trunk treatments subtable must never contain the code for receiver off hook (ROH) in the route list and the route list must never terminate with the codes for lockout (LKOUT) or idle (IDLE).

PBX two-way trunk treatments subtable

EXTTMTNM = PXTRKGRP

LOCAL and TOLL

The PBX treatments subtable is optional and is only provided in local or combined local/toll switch to list the treatments for two-way PBX DID/DOD trunk groups, trunk group types PX and P2, that differ from treatments in the office treatments subtable.

Treatments in the PBX treatments subtable should never contain the code for receiver off hook (ROH) in the route list and must never terminate with codes for lockout (LKOUT) or idle (IDLE).

AOSS treatments subtable

EXTTMTNM = AOSSTKGP

LOCAL and TOLL with AOSS

The Auxiliary Operator Services Systems (AOSS) treatments subtable is optional and is only provided in toll or combined local/toll switches with trunk group types AOSS, to list the treatments that differ from treatments in the office treatments subtable.

Treatments in the AOSSTKGP treatments subtable should never contain the code for receiver off hook (ROH) in the route list and must never terminate with codes for lockout (LKOUT) or idle (IDLE).

Routing options for each treatment

When UCS DMS-250 switch software encounters a treatment code, it accesses the subtable TMTCNTL.TREAT that applies to the originator of the call and determines the defined tones and announcements that the originator should hear.

TMTCNTL (continued)

Each tone and announcement is identified by a CLLI code in table CLLI.

The operating telephone company can specify a single treatment CLLI or a succession of treatment CLLIs as follows:

- Route directly to a single treatment CLLI

  FSTRTSEL FIELD NAME

  S CLLI

- Route through a route table to a succession of treatment CLLIs

  FSTRTSEL FIELD NAME

  T TABID, KEY

The treatment route list is specified in the applicable table as follows:

- LOCAL and TOLL
- Office Route table OFRT
- Overseas Route tables OVR0 to OVR9.

Note: When one of the route tables above is accessed as a result of a treatment, each of the treatment CLLIs is connected to the originator in the same order as listed for the length of time prescribed for each treatment CLLI.

Treatment CLLIs

Each treatment CLLI must have definition in table CLLI and, except for fixed treatment CLLI's IDLE, LKOUT, and COPP, in one of the following tables:

- software-generated tones table TONES
- hardware-generated tones table STN
- recorded-announcements table ANNS
- digital-recorded announcements table DRAMS

Fixed treatment CLLI's IDLE, LKOUT, and COPP are defined by the UCS DMS-250 switch's software as follows:

- IDLE: Equivalent to the originating line going off-hook. Must appear as the last treatment CLLI in a route list.
- LKOUT: The originating line is locked out (in other words, connected to nothing, silent) for as long as it stays off-hook. Must appear as the last treatment CLLI in a route list.
- COPP: Cutoff On Permanent signal and Partial dial. This treatment CLLI is only introduced into the routing list associated with line treatments PSIG and PDIL to supply, on every standard line in a UCS DMS-250 switch office, an open battery signal as the first operation in processing permanent signal and partial dial subscriber line conditions. This routing list element has no impact on business sets, data units or display phones.

The open battery signal is intended to inform subscriber line equipment suitably equipped that the line has entered a permanent signal or partial dial state.

Note: It is important that the routing element COPP is not used in any other line treatments and when used for the PSIG and PDIL line treatments must only appear as the first element in the routing list corresponding to those treatments. Also, when COPP is used in the routing list corresponding to the PSIG and PDIL line treatments, it must follow the LKOUT routing list element somewhere in the routing list.

TMTCNTL (continued)

Description of treatment codes

(Sheet 1 of 37)

Treatment	Description
ADBF	ANI Not Found In Data Base. TANDEM Used when call processing cannot find subscriber's automatic number identification (ANI) in the database. LOCAL and TOLL Redundant, set to overflow or similar tone.
AIFL	Auto Identified Outward Dialing Failure LOCAL, LOCAL TOLL Treatment AIFL occurs on call incoming on a PBX line with the AIOD feature or on a trunk of group type PX or P2 with the AIOD feature (field AIOD set to Y) when the UCS DMS-250 switch fails to receive the AIOD message over the AIOD datalink within the specified delay and chooses to send the call to treatment. Route the treatment to the appropriate announcement or to an operator. TOLL,TANDEM Redundant, set to overflow or similar tone.
ANBB	ANI Feature Group B Blockage TANDEM Treatment ANBB occurs when an Other Common Carrier services subscriber call attempts to access Feature Group B trunks, but the originating ANI is not a valid number and is blocked in table ANISCRNU. LOCAL and TOLL Redundant, set to overflow or similar tone.

(Sheet 2 of 37)

Treatment	Description
ANCT	Machine Intercept. TANDEM Treatment ANBB occurs when an Other Common Carrier services subscriber call attempts to access Feature Group B trunks, but the originating ANI is not a valid number and is blocked in table ANISCRNU. LOCAL and TOLL Redundant, set to overflow or similar tone.
ANCT	Machine Intercept. LOCAL, LOCAL TOLL This treatment is used for routing of disconnected or out of service directory numbers to an announcement (machine intercept). *Note:* For information on assigning lines to this treatment, see OUT orders in the *Service Order Manual*. TOLL, TANDEM Redundant, set to overflow or similar tone.
ANIA	ANI Account Status Not Allowed. TANDEM A trunk routes to this treatment when the ANI is not found in the database or when the ANI is found and set to block. LOCAL and TOLL Redundant, set to overflow or similar tone.
ANTO	Answer Timeout. LOCAL, TOLL and TANDEM Redundant, set to overflow or similar tone.

TMTCNTL (continued)

(Sheet 3 of 37)

Treatment	Description
ATBS	Attendant Busy. LOCAL, LOCAL and TOLL Redundant, set to overflow or similar tone. IBN treatment are now handled in the Audio interlude table AUDIO. TOLL Redundant, set to overflow or similar tone.
ATDT	ATD Timeout. TANDEM Treatment ATDT occurs when the office parameter ATD_TIMEOUT_OPTION is set to Y and a calling subscriber does not disconnect (remains off-hook) long enough for the Audio Tone Detector (ATD) default timer to time-out. LOCAL and TOLL Redundant, set to overflow or similar tone.
BLDN	Blank Directory Number LOCAL, LOCAL and TOLL This treatment is required for routing of unassigned directory numbers. The 1000 directory numbers for each 1000 group in the Thousand Group table (THOUGRP) with selector C are automatically routed to this treatment upon initialization. TOLL and TANDEM Redundant, set to overflow or similar tone.

(Sheet 4 of 37)

Treatment	Description
BUSY	Busy Line LOCAL and TOLL The treatment to which a line or trunk is routed when one of the following conditions exist. • A line without the intercom (INT) option assigned in the LENLINES table, dials their own directory number. • A line or trunk dials a directory number which is busy and call waiting is not in effect. • The called line has been seized for testing, or is out of service and has not been assigned the plug-up option. LOCAL and TOLL Test equipment (for example, test desk or cabinet), CALRS or incoming operator verifications trunks have access to busy lines except when the busy line has the No Double Connection (NDC) option assigned in the LENLINES or IBNLINES table. TANDEM Redundant, set to overflow or similar tone.
CACE	Carrier Access Code In Error LOCAL and TOLL (End Office with Equal Access feature) This treatment occurs when the dialed carrier access code 10XXX is vacant or changed. Route to announcement “We're sorry, the number you dialed cannot be reached with the carrier access code you dialed. Please check the code and dial again or call your carrier for assistance." LOCAL and TOLL (Office without Equal Access feature) TANDEM Redundant, set to overflow or similar tone.
CCNA	Calling Card Not Allowed TANDEM Future, set to overflow or similar tone. LOCAL and TOLL Redundant, set to overflow or similar tone.

TMTCNTL (continued)

(Sheet 5 of 37)

Treatment	Description
CCNV	Calling Card Invalid TANDEM This treatment is routed to if the calling card is invalid. The subscriber has one more chance to enter valid calling card number. Route to announcement “Please dial a valid calling card number." LOCAL and TOLL Redundant, set to overflow or similar tone.
CCTO	Calling Card Timeout. TANDEM This treatment is routed to if the subscriber fails to enter a TCN within one to ten seconds (controlled by office parameter MCCS_CALLING_CARD_TIMEOUT). Route to announcement “Please dial your calling card number." If no digits are dialed after this announcement, the call is routed to treatment Partial Dial Timeout (PDIL). LOCAL and TOLL Redundant, set to overflow or similar tone.
CFWV	Variable Call Forwarding Verification LOCAL and TOLL (End Office with Variable Call Forwarding feature) A subscriber with variable call forwarding is routed to this treatment when they dial the call forwarding activation service access code while call forwarding is already active on that line. LOCAL and TOLL (Office without Variable Call Forwarding feature) TANDEM Redundant, set to overflow or similar tone.

(Sheet 6 of 37)

Treatment	Description
CGRO	Customer Group Resource Overflow LOCAL and TOLL The treatment to which an IBN call is routed when shortages occur on resources provisioned on a customer group basis. This includes: The number of six-port conference circuits datafilled against the customer group. The number of parking lots datafilled against the customer group. TANDEM Redundant, set to overflow or similar tone.
CNDT	Coin Denied Termination LOCAL, LOCALTOLL, TANDEM The treatment to which a line or trunk is routed upon dialing a coin line directory number which terminates in the switch and has the denied terminating (DTM) option. *Note:* Calls to a non-coin line with option DTM result in treatment DTNR. TOLL Redundant, set to overflow or similar tone.
CNOT	Coin Overtime LOCAL, LOCALTOLL If the switch has the Local Coin Overtime feature the treatment to which a coin line is terminated when coins are not deposited for the overtime period. For switches without the Local Coin Overtime feature, route to overflow or similar tone. TOLL, TANDEM Redundant, set to overflow or similar tone.

TMTCNTL (continued)

(Sheet 7 of 37)

Treatment	Description
CONF	Confirm Tone LOCAL, LOCALTOLL The treatment to which a line with call forwarding or speed calling is routed upon dialing the activation code for the feature. The route list elements for this treatment should consist of confirmation tone, no tone, and lockout. TOLL, TANDEM Redundant, set to overflow or similar tone.
CONP	Connection Not Possible TANDEM The treatment to which a call is routed when a call is not completed by Carriers because of 3L to 3L blocking (transmission quality requirements). LOCAL and TOLL Redundant, set to overflow and similar tone.
CQOV	Cama Queue Overflow LOCAL and TOLL with AOSS This treatment is required for a switch that is equipped with AOSS. This is the treatment to which a call is routed when queue overflows. LOCAL and TOLL with no AOSS or TANDEM Redundant, set to overflow or similar tone.
DACD	Dial Carrier Access Code LOCAL and TOLL (End Office with Equal Access feature) This treatment occurs when 10XXX must be dialed. Route to announcement “We're sorry, it is necessary to dial a carrier access code for the number you have dialed. Please hang up and try your call again." LOCAL and TOLL (Office Without Equal Access feature), TANDEM Redundant, set to overflow or similar tone.

(Sheet 8 of 37)

Treatment	Description
DCFC	Disallowed Coin Free Call LOCAL, LOCAL and TOLL The treatment to which a coin-free line, line class code CFD in Line Attribute table is routed, when dialing other than an operator-assisted (0+) call or three-digit service code. TOLL, TANDEM Redundant, set to overflow or similar tone.
DISC	Disconnect Timing LOCAL, LOCAL and TOLL The treatment to which a line is routed, when the subscriber fails to go `on hook' within ten seconds after the other party terminates the call. The call has been forcibly disconnected from a CAMA position serve by a non-TOPS switch. Answer has not been received on a DDO call within five minutes after the call was set up through this switch. An origination, presumably due to some hardware failure, appears to have come from an outgoing Emergency Service Bureau (911) trunk. TOLL, TANDEM Redundant, set to overflow or similar tone.
DNTR	Denied Terminating LOCAL, LOCAL and TOLL The treatment to which a line or trunk is routed upon dialing a non-coin line directory number which terminates in the switch and has the denied terminating (DTM) option. ***Note:*** Calls to a coin line with option DTM results in treatment CNDT. TOLL, TANDEM Redundant, set to overflow or similar tone.

TMTCNTL (continued)

(Sheet 9 of 37)

Treatment	Description
DODT	Denied Originating Data Terminal LOCAL/TOLL Any data unit attempting to originate without its RS-232 DTR lead high is sent to this treatment. TANDEM Redundant, set to overflow or similar tone.
D950	Dial 950 LOCAL and TOLL (Office without Equal Access feature) This treatment occurs when 10XXX is dialed instead of 950-1XXX. The OCCINFO table for carrier data, in this case has field ACCESS set to INTERIM. Route to announcement “We're sorry, the carrier access code you dialed must be preceded by the digits 950. Please hang up and try your call again.'' LOCAL and TOLL (Office without Equal Access feature), TANDEM Redundant, set to overflow or similar tone.
EMR1	Emergency Treatment 1 LOCAL and TOLL The treatment to which a call is deflected by network management by code blocking, destination code cancellation or alternate route control can routed to this treatment if, on the network management MAP level, the customer sets the deflected calls to route to EA1. TANDEM Redundant, set to overflow or similar tone.

(Sheet 10 of 37)

Treatment	Description
EMR2	Emergency Treatment LOCAL and TOLL The treatment to which a call is deflected by network management by code blocking, destination code cancelation or alternate route control can routed to this treatment if, on the network management MAP level, the customer sets the deflected calls to route to EA2. TANDEM Redundant, set to overflow or similar tone.
EMR5	Emergency Treatment 5 LOCAL and TOLL with AOSS This treatment is required for a switch that is equipped with AOSS. This is the treatment given when a Directory Assistance (411, 555, 131) call is deflected. LOCAL and TOLL Without AOSS or TANDEM Redundant, set to overflow or similar tone.
EMR6	Emergency Treatment 6 LOCAL and TOLL With AOSS This treatment is required for a switch that is equipped with AOSS. This is the treatment given when an intercept call is deflected. LOCAL and TOLL Without AOSS TANDEM Redundant, set to overflow or similar tone.
ERDS	Trunk Perm Ground LOCAL and TOLL Handle a trunk on which a permanent ground has been detected during a call. This forces us to take the call down and operate the cutoff relay, to save power. TANDEM Redundant, set to overflow or similar tone.

TMTCNTL (continued)

(Sheet 11 of 37)

Treatment	Description
FDER	Feature Data Error LOCAL K&S (AUSTRIA) This treatment is used by the call forwarding K&S (AUSTRIA) features whenever an invalid call forward is attempted. The treatment FDER is not used in any North American tables. LOCAL, TOLL and TANDEM Redundant, set to overflow or similar tone.
FDNZ	First Digit Not Zero TANDEM This treatment is routed to a TCN reorigination when the first digit of the address digit is not a zero. The subscriber has one more chance to dial the called number correctly. Route to announcement, “Please dial zero plus the number you are dialing." LOCAL and TOLL Redundant, set to overflow or similar tone.
FECG	Far End Congestion LOCAL, TOLL and TANDEM Redundant, set to overflow or similar tone.
FNAL	Feature Not Allowed LOCAL and TOLL A subscriber is routed to this treatment after dialing the feature activation digits of a feature that is assigned to the subscriber. This treatment is distinct from NACK which occurs when the subscriber attempts to use a custom calling feature and a request is not served. Example: The subscriber dials *73, the feature access code for Call Forwarding, but the subscriber's line does not have Call Forwarding assigned. TANDEM Redundant, set to overflow or similar tone.

(Sheet 12 of 37)

Treatment	Description
GNCT	Generalized No Circuit LOCAL and TOLL This treatment occurs if the trunk group is the last route in a route list and an all trunks busy condition is encountered on the route list. In addition the treatment GNCT is pegged If the trunk group type is VR, treatment NOSC is the treatment pegged instead of GNCT. The line or trunk routes to treatment NOSC. TANDEM A call originating on an incoming or two-way is routed to treatment GNCT when all trunks associated with the outgoing route are busy.
HNPI	Home NPA Intercept LOCAL and TOLL The treatment to which a line or trunk is routed upon dialing home NPA when home NPA dialing is not permitted. This treatment is assigned against the home NPA in the Home NPA Code table with code type VCT. TANDEM Redundant, set to overflow or similar tone.
IDPD	IDDD Prohibited Treatment LOCAL and TOLL This treatment is given when an IDDD call is originated from a subscriber whose authcode or ANI database specifies that this subscriber is not allowed to dial an IDDD destination number. The Vacant_Country_Code treatment is no longer used for this condition.

TMTCNTL (continued)

(Sheet 13 of 37)

Treatment	Description
ILRS	Inter Lata Restriction LOCAL and TOLL (End Office with Equal Access feature) This treatment occurs due to one of the following: • An InterLATA call when line option ITD (InterLATA Toll Denied) is on the line. • An InterLATA call when table OCCINFO has field INTER (InterLATA) set to N (No) for the specified carrier. • An IntraLATA call when table OCCINFO has field INTRA (IntraLATA) set to N (No) for the specified carrier. • An International call when table OCCINFO has field INTNTL (International) set to N (No) for the specified carrier. Route to announcement “We're sorry, your call cannot be completed as dialed from the phone you are using. Please read your instruction card or call your operator to help you." LOCAL and TOLL (Office without Equal Access feature), TANDEM Redundant, set to overflow or similar tone.
INAC	Invalid Account Code LOCAL and TOLL Redundant, set to overflow or similar tone. TANDEM The treatment to which a call is routed when account code validation is required, and the dialed account code is not valid for that trunk group.

(Sheet 14 of 37)

Treatment	Description
INAU	Invalid Authorization Code LOCAL and TOLL Redundant, set to overflow or similar tone. TANDEM The treatment to which a call is routed when one of the following conditions is encountered: An authcode is found invalid. City Code Screening specifies that call is blocked because authcode was not dialed in valid city of origin. Dialed security code digits associated with authcode do not match security code digits stored against the authcode.
INCC	Invalid City Code TANDEM The treatment to which a call is routed when the city code dialed is found invalid by screening. LOCAL and TOLL Redundant, set to overflow or similar tone.
INPD	Invalid Pin Digits Treatment LOCAL and TOLL This treatment occurs when the dialed PIN digits do not match the filed PIN pin digits, which are stored in the authcode database. This condition is no longer treated with Invalid_Authorization_Code.
INOC	Invalid Operator Code LOCAL and TOLL With AOSS The treatment given when an invalid Operator Identification Code (OIC) is received from a trunk of trunk groups type AOSS. LOCAL and TOLL Without AOSS, TANDEM Redundant, set to overflow or similar tone.

TMTCNTL (continued)

(Sheet 15 of 37)

Treatment	Description
IVCC	Invalid Corridor Call LOCAL and TOLL (End Office With Equal Access Feature) The treatment to which a call is routed when attempting to make interLATA, non-corridor calls using OTC. LOCAL and TOLL (Office Without Equal Access Feature), TANDEM Redundant, set to overflow or similar tone.
LCAB	Local Call Area Barred TANDEM The treatment to which a call is routed when attempting a local call through a Carrier. Carriers are not authorized to complete calls originating and terminating within the same local calling area. LOCAL and TOLL Redundant, set to overflow or similar tone.
MNAL	Manual Line LOCAL, LOCALTOLL The treatment to which a line with originating manual service (option MAN assigned in table LENLINES) is routed when originating a call. TOLL, TANDEM Redundant, set to overflow or similar tone.
MHLD	Music On Hold LOCAL, LOCALTOLL Redundant, set to overflow or similar tone. IBN treatments are now handled in the Audio interlude table AUDIO. IBN treatments are now handled in the Audio interlude table AUDIO. Redundant, set to overflow or similar tone.

(Sheet 16 of 37)

Treatment	Description
MSCA	Misdirected Cama Call (Prefix Digit Dialed In Error) LOCAL and TOLL This treatment is used in the STDPRTCT or Prefix Treatment tables for routing of local calls which attempt to but are not permitted to switch through the toll network or when the prefix digit 0 or 1 is dialed in error on a local call and dialing of prefix digits on local calls is not permitted. TANDEM Redundant, set to overflow or similar tone.
MSLC	Misdirected Local Calls (Prefix Digit Not Dialed) LOCAL and TOLL, TANDEM The treatment to which a line is routed when one of the following conditions is encountered: A line originating an operator-assisted call (0+) to the following codes NPA555, 555 or 800. A station ringer call and last four digits do not match those of calling line and call is not defined as no prefix local in Local Calling Area and Prefix Treatment table. When prefix digit 0 or 1 is not dialed on a toll call and Prefix Treatment table specifies prefix digit is mandatory on toll calls.
NACD	Do Not Dial Carrier Access Code LOCAL and TOLL (End Office with Equal Access feature) This treatment occurs when 10XXX dialed for a carrier which is the subscriber's PIC in table LENFEAT. Route to announcement “We're sorry, it is not necessary to dial a carrier access code for the number you have dialed. Please hang up and dial your call again." LOCAL and TOLL (Office without Equal Access feature), TANDEM Redundant, set to overflow or similar tone.

TMTCNTL (continued)

(Sheet 17 of 37)

Treatment	Description
NACK	Negative Acknowledgement LOCAL and TOLL (End Office with Custom Calling features) This treatment occurs when a subscriber's feature request is not performed due to some feature interaction or feature restriction. It is distinct from FNAL which occurs only when a subscriber attempts to use a Custom Calling feature that has not been assigned to the line. Example: • Subscriber B has Call Forwarding to subscriber C. • Subscriber C is busy. • Subscriber A dials subscriber B, hears busy tone and attempts to RAG. • NACK is returned because RAG is not permitted on a subscriber's line which is Call Forwarded. LOCAL and TOLL (Office without Custom Calling features), TANDEM Redundant, set to overflow or similar tone.

(Sheet 18 of 37)

Treatment	Description
NBLH	Network Blockage Heavy Traffic LOCAL and TOLL The treatment given to one of the following call types when the immediate cause of failure is the inability to get a path through the network. • After second try for a CAMA position, operator, or receiver. • No path on three-way call, between conference circuit and trunk. • No network path on an operator-to-line call. • No network path to Metallic Access trunk. • No network path to Line Test Unit on station ringer test call. • No network path from conference port to called line. TANDEM The treatment to which a call is routed when one of the following conditions is encountered: • After second unsuccessful attempt to reserve a network path from an incoming trunk to an outgoing trunk. • After second unsuccessful attempt to reserve a network path from an outgoing trunk to an audio tone detector.
NBLN	Network Blockage Normal Traffic LOCAL and TOLL The treatment to which a call is routed, when the call is being aborted due to blocking (failure to get a channel) in the terminating peripheral module. TANDEM Redundant, set to overflow or similar tone.

TMTCNTL (continued)

(Sheet 19 of 37)

Treatment	Description
NCII	NCS Invalid ID Code TANDEM The treatment to which a call is routed when the action code in a response message received from the NCS is 7 (Invalid ID Code). An ID code is a portion of the supplementary code collected from the subscriber. LOCAL and TOLL Redundant, set to overflow or similar tone.
NCIX	NCS Incoming Exclusion NCIX TANDEM The treatment to which a call is routed when the action code in a response message received from the NCS is 6 (Incoming Exclusion). LOCAL and TOLL Redundant, set to overflow or similar tone.
NCRT	No Circuit LOCAL and TOLL, TANDEM The treatment to which a routine call is deflected by network management to NCA. This treatment may also specify by a network manager (as an alternative to Emergency 1 or 2) for calls aborted through operation of cancel-from or cancel-to network management controls.
NCTF	NCS Translation Failure TANDEM The treatment to which a call is routed when the action code in a response message received from the NCS is 9 (Misdialed Number). An ID code is a portion of the supplementary code collected from the subscriber. LOCAL and TOLL Redundant, set to overflow or similar tone.

(Sheet 20 of 37)

Treatment	Description
NCUN	NCS Unexpected Error TANDEM The treatment to which a VPN call is routed when the action code in a response message received from the NCS is 8 (Unexpected Error). LOCAL and TOLL Redundant, set to overflow or similar tone.
NC8F	NCS 800 Service Failure LOCAL and TOLL The treatment to which a call is routed in the case of an NCS 800 Service Failure. The treatment sends an announcement to the subscriber indicating that the 800 call cannot be completed as dialed.
NECG	Near End Congestion LOCAL and TOLL, TANDEM Redundant, set to overflow or similar tone.
NINT	Changed Number Intercept TANDEM The treatment to which a call is routed when the called number has changed and is no longer terminated on. LOCAL and TOLL Redundant, set to overflow or similar tone.
NMZN	No Meeting Zone NONE Handles billable calls for which no metering zone is found in translations. LOCAL and TOLL,TANDEM Redundant, set to overflow or similar tone.

TMTCNTL (continued)

(Sheet 21 of 37)

Treatment	Description
NOCN	No Coin LOCAL,LOCALTOLL The treatment to which a call is routed when the calling line is coin and there is no coin present on a chargeable call. TOLL,TANDEM Redundant, set to overflow or similar tone.
NONT	Not On Network TANDEM A call is routed to this treatment if it conforms to the dialing plan but is not on the network. This treatment is datafilled as a route choice. For example, if area code 214 were not supported, then the table HNPACONT would contain NONT as the one route choice for this area code. LOCAL and TOLL Redundant, set to overflow or similar tone.

(Sheet 22 of 37)

Treatment	Description
NOSC	No Service Circuit LOCAL and TOLL The treatment to which an originator is routed when hardware resources are all busy. This includes: • All receivers, senders or verification 90 trunks are busy. • The number of trunks queuing for a CAMA position trunk is equal to or greater than the quantity specified for field DEFLECT for the number of CAMA positions available after second try. • No CAMA position available after second try. • Operator queue overflow, including all queues for CAMA operators. • No conference circuit available. • Timeout in CAMA queue, including all queues for CAMA operators. • No Metallic Test Access connection available. • No resources for 108 testline call. • No tone or announcement available on intercom call. • The last trunk group of group type VR (Operator Verification trunk) in a route list encounters an all-trunks-busy condition. TANDEM The treatment to which a trunk is routed when one of the following conditions is encountered: No recording units are available for call detail recording billing and call is blocked as specified by office parameter CDR_UNAVAIL_BLOCK. Echo suppression is specified but not available for test line calls (terminating to T100, T101 or T102). Resources for conference calling not available when feature is activated (in other words, six-port conference circuit is not allocated, office parameters controlling data resources for conference calls are not set properly).

TMTCNTL (continued)

(Sheet 23 of 37)

Treatment	Description
NOSR	No Software Resource No Software Resource The treatment to which a call is routed when software resources are all busy. This includes: No multiblocks, recording units or LAMA blocks available No custom calling software resources such as: • portperm extension block • custom calling feature extension block • supplementary data block • feature data block TANDEM Redundant, set to overflow or similar tone.
NPAR	NPA Restricted LOCAL and TOLL This treatment is given when one of the following conditions occurs: • An INWATS call is dialed from a subscriber, whose NPA is marked BLOCKED in the IEXCLUDE table. This condition is no longer treated with Local_Call_Area_Barred treatment. • Subscriber dialed a Universal Access Code to draw dialtone from the DMS-250 then dialed an 800 call. This condition is no longer treated with Vacant_Code_Treatment. • This treatment is only given if these conditions currently exist for a particular customer load.

(Sheet 24 of 37)

Treatment	Description
N950	Do Not Dial 950 LOCAL and TOLL (End Office with Equal Access feature) This treatment occurs when 950-1XXX is dialed instead of 10XXX. The OCCINFO table for carrier data, in this case has field ACCESS set to EAP. Route to announcement “We're sorry, it is not necessary to dial the digits 950 before dialing your carrier access code. Please hang up and dial your call again." LOCAL/TOLL (Office without Equal Access feature), TANDEM Redundant, set to overflow or similar tone.
N00B	N00 Call Blocked LOCAL and TOLL The treatment to which a call is routed when the DMS-250 receives the INVOKE message from DCP, Number Not Translated, with the reason, translation blocked.
OPRT	Regular Intercept LOCAL and TOLL This treatment is for the routing of disconnected or out of service directory numbers to an operator (regular intercept). For information on assigning lines to this treatment, see OUT orders in the *Service Order Manual*. TANDEM Redundant, set to overflow or similar tone.
ORAC	Originating Revertive Action For Two-Party Lines With Coded Ringing LOCAL and LOCALTOLL This is the treatment to which a two-party line with coded ringing is routed on attempting to terminate to a party on the same line. TOLL and TANDEM Redundant, set to overflow or similar tone.

TMTCNTL (continued)

(Sheet 25 of 37)

Treatment	Description
ORAF	Originating Revertive Action For Two-Party Lines With Frequency Ringing LOCAL and LOCALTOLL This is the treatment to which a two-party line with frequency ringing is routed on attempting to terminate to a party on the same line. TOLL and TANDEM Redundant, set to overflow or similar tone.
ORMC	Originating Revertive Action For Multiparty Lines With Coded Ringing LOCAL and LOCALTOLL The treatment to which a multiparty line with coded ringing is routed on attempting to terminate on the same line. TOLL and TANDEM Redundant, set to overflow or similar tone.
ORMF	Originating Revertive Action For Multiparty Lines With Frequency Ringing LOCAL, LOCAL and TOLL The treatment to which a multiparty line with frequency ringing is routed on attempting to terminate to a party on the same line. TOLL,TANDEM Redundant, set to overflow or similar tone.
ORSS	Originating Service Suspension LOCAL, LOCAL and TOLL The treatment to which a line with denied originating or the suspended service option assigned in the LENLINES or IBNLINES table is routed on originating a call. TOLL,TANDEM Redundant, set to overflow or similar tone.

(Sheet 26 of 37)

Treatment	Description
PDIL	Partial Dial Timeout LOCAL and TOLL,TANDEM The treatment given when at least one digit has been received, but not all of those required to complete the call. For calls on MF trunks, partial dial rather than permanent signal treatment is administered if a MF KP signal has been received. If no MF ST signal is received, the correct treatment is still partial dial, but if a ST signal is received which is invalid in the context of the call, the proper treatment is reorder. *Note:* Treatment CLLI COPP is used as the first element in the route list for this treatment.
PNOH	Permanent Signal No Receiver Off Hook LOCAL, TOLL and TANDEM Future, set to overflow or similar tone.
PRSC	Priority Screen Fail LOCAL and TOLL LOCAL and TOLL TANDEM The treatment to which a trunk is routed when authcode priority screening is in effect, and the priority of the subscriber's authcode is lower than the current office priority.
PSIG	Permanent Signal Timeout LOCAL and TOLL The treatment given when no digits are received before timeout. Calls for which distorted signals (rather than none at all) have been received are given reorder treatment. *Note:* Treatment CLLI COPP is used as the first element in the route list for this treatment. TANDEM The treatment to which a trunk is routed when origination occurs on an incoming or two-way trunk, but no digits are dialed within the period of time specified by trunk subgroup parameter PSPDSEIZ.

TMTCNTL (continued)

(Sheet 27 of 37)

Treatment	Description
PTOF	Premature Trunk Group NONE Handles calls which receive a trunk offering signal before translation is finished. LOCAL and TOLL,TANDEM Redundant, set to overflow or similar tone.
RODR	Reorder LOCAL and TOLL The treatment given to calls when distorted signals are received during dialing or in-pulsing. Includes instances of extra or mutilated pulse on incoming digits, noise during signaling, distorted frequencies, invalid ST control digits or failure during ANI inpulsing. TANDEM The treatment to which a call is routed when one of the following conditions is encountered: • The number of digits dialed is more than the maximum number of digits required for a call. • For FXO and FXS circuits, a digit receiver is necessary but not available, or a receiver is obtained, but no network path is available. • A valid speed number is dialed, but not enough digits were returned from the speed number database for translations to make a determination. • An unexpected error condition occurs on an outgoing trunk while a call is up (for example, network integrity loss, invalid A- and B-bit state received, or force release is ordered from MAP position for terminating circuit). • A treatment is set which does not appear in the trunk group specific treatment subtable, or in subtable TMTCNTL.OFFTREAT.
RRPA	Revertive Ring Prefix Announcement LOCAL and TOLL, TANDEM Future, set to overflow or similar tone.

(Sheet 28 of 37)

Treatment	Description
RSDT	Restricted Date And Time LOCAL and TOLL Redundant, set to overflow or similar tone. TANDEM The treatment to which a call is routed when a subscriber's authcode has a restriction class which does not allow the subscriber to access the network at the present time.
SCFL	DBS Communications Failure TANDEM The treatment to which a call is routed when: • There is a failure in the communications link to the DBS which prevents the processing of VPN (Virtual Private Network) calls. • Unable to hold onto a request because the Wait_for_Ack queue is full (VPN Transaction Processing feature). • The DBS communications software in the UCS DMS-250 switch has failed to respond after four times the timeout value NCSTIMEOUT in table OFCENG. • An error is detected in the data received from the DBS. • No communications links are available to the DBS. LOCAL and TOLL Redundant, set to overflow or similar tone.
SCUN	Service Currently Unavailable LOCAL and TOLL 0+ ONNET calls are not presently allowed operator access. These calls are treated with SERVICE_CURRENTLY_UNAVAILABLE.
SORD	Storage Overflow Reorder LOCAL and TOLL, TANDEM Redundant, set to overflow or similar tone.

TMTCNTL (continued)

(Sheet 29 of 37)

Treatment	Description
SRRR	Single Party Revertive Ringing LOCAL/TOLL This treatment is required for subscribers intercom (single party revertive ringing). If the switch has office option INTERCOM set to Y (yes) in table OFCOPT, a line with the intercom option (option INT in table LENLINES) is routed to this treatment upon dialing own directory number in order to ring an extension phone. TANDEM Redundant, set to overflow or similar tone.
SSTO	Start Signal Time Out LOCAL and TOLL The treatment given to a call when the following expected signals are not received from the far end while setting up a call. Timeout waiting for an operator answer. ANI outpulse failure or timeout. Includes failures during outpulsing of the called number or of the ANI information. Failure on outgoing trunks during ROTL tests. TANDEM Redundant, set to overflow or similar tone.
STOB	Signal Time Out Boc LOCAL and TOLL (End Office with Equal Access feature) The treatment given to a call when completing a call in a Equal Access environment over an Access Tandem (AT) trunk and the AT does not get EAEO wink. LOCAL/TOLL (Office without Equal Access feature), TANDEM Redundant, set to overflow or similar tone.

(Sheet 30 of 37)

Treatment	Description
STOC	Signal Time Out IC/INC LOCAL and TOLL (End Office with Equal Access feature) The treatment given to a call when completing a call in a Equal Access environment over an Access Tandem Trunk and the EAEO/AT does not get IC/INC wink(s). LOCAL and TOLL (Office without Equal Access feature), TANDEM Redundant, set to overflow or similar tone.
SYFL	System Failure LOCAL and TOLL The treatment to which a call is routed if the call is aborted due to a switch hardware or software failure. Includes the following types of failures: • Call failure or integrity lost from port 1. • Miscellaneous messages from port 2. • Software failures or error conditions. • Line-to-line, line-to-trunk or trunk-to-line error takedown. • Miscellaneous failures during overlap outpulsing. • Miscellaneous error returns during set up. • Called line LM busy or under test. • Failed ANI test due to data error. • ANI failure on local CDR call. • Data error. • Failure in line number control processor. • Integrity lost while receiving digits. • An incoming or two-way CAMA trunk (trunk group type SC) with BELL format is routed when the start signal received is not the same as the one specified in field SDATA (subfield GRPTYPE) in table TRKGRP. • Ring failures. • TANDEM • Redundant, set to overflow or similar tone.

TMTCNTL (continued)

(Sheet 31 of 37)

Treatment	Description
TDBR	Test Desk Bridged LOCAL, LOCALTOLL If a AT&T Mechanized Loop Tester or a 14 LTD Signaling Type trunk (trunk group type TD), is connected to a line which has one of the options SUS, RSUS, PLP or RMB activated, when the trunk is connected in idle bridge mode to that line, the line goes to this treatment either if the test desk closes its Tip/Ring loop or if the line itself goes off-hook. Typically, this treatment consists of a one-second burst of dial tone and then lockout. TOLL,TANDEM Redundant, set to overflow or similar tone.
TDND	Toll Denied LOCAL/TOLL The treatment to which a line or trunk is routed when one of the following conditions are encountered. A line with the toll-denied option (option TDN assigned in the LENLINES table) originates a direct dial (DD) type of call which is not intercepted by class of service screening. A coin line with the toll-denied option (option TDN assigned in the LENLINES table) originates an operator-assisted (OA) type of call which is not intercepted by class of service screening. If the switch has AMR5 signaling and a line, other than coin, with toll-denied option originates a zero plus (0+) or zero minus (0-) call and the ZEROMPOS field in the line attribute table is other than AMR5. Incoming or two-way CAMA/AMR5 (trunk group type SC) with AMR5 signaling format when category code requires toll-denied treatment. The category code to originating type toll denied is specified in table AMRCAT. An IBN line is routed to this treatment when making a toll call other than 1 + 555, 1 + NPA555 or 1 + 800, and the IBN line has the toll-denied restriction specified with the `direct outward dial' access code in the IBNXLA table. TANDEM Redundant, set to overflow or similar tone.

(Sheet 32 of 37)

Treatment	Description
TESS	Terminating Service Suspension LOCAL, LOCALTOLL The treatment to which a line or trunk is routed when one of the following conditions is encountered. An incoming operator (trunk group type OI) verification call to a busy line which has the suspended service option (SUS) assigned in the LENLINES or IBNLINES table. A call from a line or trunk to a line which has the service option (SUS) assigned in the LENLINES or IBNLINES table. TOLL,TANDEM Redundant, set to overflow or similar tone.
TINV	Temporarily Invalid Authorization Code LOCAL and TOLL LOCAL and TOLL TANDEM The treatment to which a call is routed when the status of an authorization code is determined temporarily invalid.
TOVD	Toll Overload LOCAL, LOCALTOLL The treatment given to a calling line denied access to the toll network due to the activation of the toll network protection feature. TOLL Redundant, set to overflow or similar tone.

TMTCNTL (continued)

(Sheet 33 of 37)

Treatment	Description
TRBL	Trouble Intercept LOCAL,LOCALTOLL The treatment to which a line or trunk is routed when one of the following conditions is encountered. An incoming operator (trunk group type OI) verification call to a busy line which has the plug-up option (PLP) assigned in LENLINES or IBNLINES table. When a test desk (trunk group type TD) position tries to post a line using directory number (as opposed to LEN) dialing and the line has the plug up (PLP) option assigned in the LENLINES or IBNLINES table. When a line or trunk calls a line which has the plug up (PLP) assigned in the LENLINES or IBNLINES table. TOLL,TANDEM Redundant, set to overflow or similar tone.
TRRF	Terminating Revertive Action For Frequency Ringing LOCAL, LOCALTOLL This treatment is required for local or combined local/toll switching units which have multiparty lines with frequency ringing. This is the treatment to which a called party is routed on going off hook, when both calling and called parties are multiparty lines with frequency ringing and are on the same line. TOLL and TANDEM Redundant, set to overflow or similar tone.
UMOB	Unregistered Mobile LOCAL and TOLL, TANDEM Redundant, set to overflow or similar tone.
UNCA	Unauthorized Cama Call LOCAL and TOLL, TANDEM Redundant, set to overflow or similar tone.

(Sheet 34 of 37)

Treatment	Description
UNDN	Redundant, set to overflow or similar tone. LOCAL and TOLL The treatment to which a call is routed when the operating company input for the digits dialed in thousand group (THOUGRP), or write directory number (WRDN) tables specifies treatment UNDN. TANDEM Redundant, set to overflow or similar tone.
UNDT	Undefined Treatment LOCAL and TOLL This is the default value for entries in Class of Service Screening and Prefix Treatment tables when no treatment is required. The operating company should not supply any input data for this treatment. TANDEM Redundant, set to overflow or similar tone.
UNIN	Unauthorized Inwats Call LOCAL and TOLL The treatment in a toll or combined local/toll switch to which a call is routed when one of the following conditions is encountered. On an INWATS-originating call when a 800+NX2 number is dialed from outside the state and NX2 codes are reserved for intrastate calls. On an INWATS originating call when an 800+NNX-XXXX number is dialed from within the state. On an INWATS terminating call, when the call originated from a band that is farther away than the terminator has paid for. A call to an INWATS line and the called number is not a valid INWATS number (800), the call was not direct dialed or the call originated in the local free calling area and hence is not billable. TANDEM Redundant, set to overflow or similar tone.

TMTCNTL (continued)

(Sheet 35 of 37)

Treatment	Description
UNOW	Unauthorized Outwats Call LOCAL, LOCAL and TOLL The treatment in a local or combined local/toll switch to which an OUTWATS line is routed when dialing an out-of-band code. For information on assigning bands to codes, see table OWTZONES. For information on assigning bands to OUTWATS lines, see table LENFEAT. TOLL,TANDEM Redundant, set to overflow or similar tone.
UPAB	Universal Public Access Blocked TOLL The treatment to which a call is routed when a Universal Public Access Call is blocked.
VACS	Vacant Speed Number TANDEM The treatment to which a call is routed when a subscriber dials a number which is a public speed form, but the speed number is not in the database. LOCAL and TOLL Redundant, set to overflow or similar tone.

(Sheet 36 of 37)

Treatment	Description
VACT	Vacant Code Treatment LOCAL and TOLL The treatment to which a call is routed when one of the following conditions is encountered. • When a line dials one of the following, a toll terminating center code (code type TTC in HNPACODE table) operator code (code type OPC3, OPC4 or or OPC5 in HNPACODE table), a terminating INWATS number (1XB-XXXX), a tandem INWATS number (0XB-NNX-XXXX), dials a NPA + NPA code or a line dials a number when the entry for the number in the foreign NPA code table (FNPA) specifies unauthorized CAMA. • When an unassigned code in the Country Code table is dialed. If no translation system is specified in the STDPRTCT subtable for digit or digits which have preroute selector of N, V, Z, R, or P. • This generates a software error message. • On an originating INWATS call and there is no data specified in the INWORICN table for the INWATS number dialed. • On an originating INWATS call, when the originating screening office is also the terminating screening office, but no terminating service office code (TSO) has been specified in the INWATS Originating Control table for the NXX code dialed. • On a terminating INWATS call when no data has been specified in the INWATS Terminating Control table for the incoming digits. • A station ringer call and the last four digits do not match those of the calling line and call is defined as no prefix local. • Blue box call cutoff. • A line or operator to testline call. • Failure to dial SPDD or circle digit.

TMTCNTL (continued)

(Sheet 37 of 37)

Treatment	Description
VACT (cont)	The treatment to which a call is routed when one of the following conditions is encountered (cont). • Failure or not enough digits on speed calling or call forwarding updates. • Attempts three-way call to automatic number announcement, outgoing service desk or revertive call. TANDEM The treatment to which a call is routed when one of the following is dialed: • An unassigned NPA code, office code, or country code is dialed. • Incoming exclusion specifies that a call is blocked because a subscriber dialed a number into his own calling area.
VCCT	Vacant Country Code Treatment TANDEM The treatment to which a call is routed when call processing returns from translating an IDDD call as designated by the pretranslator (usually by dialing prefix digits 011 or 01) and no data was filled in for the network for country code dialing. This DMS-250 (Tandem) treatment applies to universal translations as well as normal international translations. LOCAL and TOLL Redundant, set to overflow or similar tone.

Field descriptions

The following is a description of field names on the various treatment subtable records when the input data for the treatment consists of a CLLI of one of the tones in the Tones table.

Field	Subfield or refinement	Entry	Explanation and action
TREATMT		Alphabetic	TREATMENT NAME. Enter the treatment name.
LOG		Y or N	LOG. Enter Y (yes) when a printout of trunk or line message 138 is required each time translation is routed to the treatment; otherwise, enter N (no).
FSTRTE		See subfields	FIRST ROUTE. This field name consists of subfields: FSTRTSEL and CLLI. See the appropriate subfield for its definition.
	FSTRTSEL	S	FIRST ROUTE SELECTOR. Enter the first route selector S.
	RefinementCLLI	alphanumeric	CLLI. Enter the CLLI of the tone to which translation has to route.

The following is a description of field names on the various treatment subtable records when input data for the treatment points to a route list in the Office Route table.

(Sheet 1 of 2)

Field	Subfield or refinement	Entry	Explanation and action
TREATMT		Alphabetic	TREATMENT NAME. Enter the treatment name.
LOG		Y or N	LOG. Enter Y when a printout of a trunk or line 138 message is required each time translation is routed to the treatment; otherwise, enter N.

TMTCNTL (end)

(Sheet 2 of 2)

Field	Subfield or refinement	Entry	Explanation and action
FSTRTE		Alphabetic	FIRST ROUTE. This field consists of subfields: FSTRTSEL, TABID and KEY. See the appropriate subfield name for its definition.
	FSTRTSEL	T	FIRST ROUTE SELECTOR. Enter the first route selector T.
	TABID	OFRT, EXDGTRTE, TOPSAMA, TOPS, RRTE, TTL4, OFR4, OFR3, OFR2	TABLE NAME. Enter office route table (OFRT).
	KEY	See explanation.	KEY. Enter the index into the office route table which defines the route list for the treatment. OFRT, EXDGTRTE, RRTE, OFR4, OFR3, OFR2: entry ranges from 0 - 1023. TOPSAMA, TOPS: entry is CALL-ORIGINATION TTL4: entry ranges from 0 - 7.

Datafill example

The following is an example of initial input data required by Nortel for processing. There are a maximum of 64 treatment names, and there is one record for each treatment

```
                                    TABID   KEY
TREATMT     LOG       TS            CLLI
_____________________________________________
NOSC        N         T             OFRT    7
RODR        N         T             OFRT    7
VACT        N         S             T120
```

TMTMAP

Table name

Treatment to Cause Map (TMTMAP) table

Functional description

The TMTMAP table provides mapping of switch treatments to call failure messages supported by certain Signaling System 7 (SS7) ISUP and Primary Rate Interface (PRI) ISDN protocols. Datafill in the table determines whether the treatment is reported to the preceding exchange (and if so, by what message) or whether the switch applies the treatment locally, in which case the usual datafill in table TMTCNTL, subtable TREAT, determines the outcome.

For the ISUP protocol, 128 failure messages exist. These messages have an index of 0 to 127 assigned to them.

For the PRI protocol, 128 failure messages exist. These message have an index of 0 to 127 assigned to them.

The key to table TMTMAP is the signaling system protocol variant, the treatment code, as well as bearer capability. The protocol variant is an attribute of the incoming trunk and is derived from the datafill in table TRKGRP.

Each time a new treatment code is added to subtable TMTCNTL.TREAT, tuples for the new treatment can be datafilled in table TMTMAP.

If an event is encountered that requires the application of a treatment for which a match in table TMTMAP cannot be found, CCS7 call processing software provides a default TMTMAPVAR for the unmatched treatment that goes to Reorder (treatment 25). The default value is

```
ISUP ALLBEARER NOLOCAL NORMUNSP LOCLNET N
```

Note: Table CSEMAP can be used to map an inbound cause value to an applied treatment.

Cause-to-treatment reference

If an originating or interworking office receives a CAUSE value in an ISUP or PRI release with a CAUSE message, the receiving office accesses table CAUSEMAP to map the CAUSE value back to a treatment and then applies the treatment. Unlike the contents of table TMTMAP, table CAUSEMAP cannot be viewed or modified using the DMS table editor.

TMTMAP (continued)

The following table shows a cross reference that allows the operating company to cross reference treatments to causes. These conditions apply to the table:

- The cause descriptor is an internal, switch, long-form description for the cause indicator.
- The cause number is the American National Standards Institute (ANSI) cause value, a telecommunications industry standard number.
- The cause abbreviation is the value that can be viewed in table TMTMAP under field CAUSE, which is datafilled by the operating company.
- The treatment is a value that is datafilled in table TMTCNTL.TREAT, which is datafilled in field TMT by the operating company.
- The treatment number is a value that is assigned to a TREATMENT and is referenced by number by operating company personnel.

Cause-to-treatment reference

Cause descriptor	Number	Cause abbreviation	Treatment	Number
ADDRESS_INCOMPLETE	28	ADDINCOM	PDIL	2
BC_NOT_AUTHORIZED	57	BCNAUTH	CNAC	113
BC_NOT_IMPLEMENTED	65	BCNIMPL	BCNI	161
BC_NOT_PRESENTLY_AVAIL	58	BCNAVAIL	CNAC	113
CALL_REJECTED	21	CALLREJ	CREJ	134
CDN_USER_NOT_IN_CUG	87	USERNCUG (Note)	RODR	25
CHNLTYPE_NOT_IMPL	66	CHNLNIMP	CONP	98
DEST_OUT_OF_SERVICE	27	DOOSRVC	TRBL	30
FACILITY_NOT_IMPL	69	FACNIMP	FCNI	167
FACILITY_REJECTED	29	FACREJ (Note)	RODR	25
IC_CALLS_BARR_CUG	55	INCBCUG (Note)	FNAL	68
INCOMPATIBLE_DEST	88	INCOMDST	CNAC	113
INTERWORKING_UNSPEC	127	INTWUNSP (Note)	RODR	25
Note: Represents a CAUSE with a default treatment.				

Cause-to-treatment reference

Cause descriptor	Number	Cause abbreviation	Treatment	Number
INVALID_CALL_REF_VALUE	81	INVCRVAL (Note)	RODR	25
INVALID_MESSAGE	95	INVMSG (Note)	RODR	25
INV_PARM_CONTENTS	100	INVPARMC (note)	SSTO	23
MISDIALED_TRK_PREFIX	5 -	MISDTRPR (Note)	RODR	25
MSGTYPE_NOT_IMPL	97	MSGNIMPL (Note)	SSTO	23
NTWK_OUT_OF_ORDER	38	NTWKOOO	SYFL	14
NO_ANS_FROM_USER	19	NOANSWER (Note)	RODR	25
NO_CIRCUIT_AVAILABLE	34	NOCIRCAV	NCRT	24
Note: Represents a CAUSE with a default treatment.				

The following table lists the conditions that apply to each cause class treatment defined in the previous table. In addition, the following should be noted:

- The cause classes are taken from ANSI standards for ISUP or PRI causes.
- The causes are divided into eight equal parts of sixteen causes each. A generic treatment is assigned to a cause class in order to fit the class functionality. If new causes in a class are developed, the default treatment for the cause is used until a more appropriate treatment for a cause is developed.

Table 2 shows class default treatments for ISUP and PRI cause indicators.

ISUP and PRI cause indicator class default treatment table

Causeclass number	Cause indicator rnage description	Causeclass range	Class default treatment
1	Normal event	0 to 31	RODR
2	Resource unavailable	32 to 47	NOSR
3	Service option not available	48 to 63	FNAL
4	Service option not implemented	64 to 79	NACK

TMTMAP (continued)

ISUP and PRI cause indicator class default treatment table

Causeclass number	Cause indicator rnage description	Causeclass range	Class default treatment
5	Invalid message	80 to 95	RODR
6	Protocol error	96 to 111	SSTO
7	Interworking	112 to 127	RODR

Datafill sequence and implications

TMTCNTL table must be datafilled before table TMTMAP.

Although the datafill in tables TMTMAP and TMTCNTL is closely related in the operation of this feature, there is no dependency that limits the datafill sequence. Default data is automatically added at loadbuild time for each protocol variant in the switch.

Table size

This table contains 0 to 101,632 tuples.

Memory requirements

Each physical tuple requires two bytes.

Field descriptions

The following table describes field names, subfield names, and valid data ranges for table TMTMAP.

Field descriptions

Field	Subfield or refinement	Entry	Explanation and action
TMTMPKEY		see subfields	TMTMPKEY. This field consists of a three-part key: PROTOCOL, TMT, and BC_CT.
	PROTOCOL	Q764 , Q931, Q767	PROTOCOL. Enter the standard protocol used by the terminating trunk. Enter Q764 for message protocol for SS7 ISUP trunks. Enter Q931 for message protocol for PRI trunks. Enter Q767 for message protocol for Gateway trunks.

TMTMAP (continued)

Field descriptions

Field	Subfield or refinement	Entry	Explanation and action
TMT		alphanumeric (one to four characters)	TREATMENT CODE. Enter one of the treatment codes defined in table TMTCNTL.TREAT, field TREATMT. This is the treatment that is applied to the specific cause value indicated in field CAUSE.
	MLNP	Treatment plus MLNP	Misrouted Local Number Portability. Enter one of the treatment codes defined in table TMTCNTL.TREAT, field TREATMT (and optionally enter the treatment MLNP).
	BC_CT	ALLBC	Enter bearer channel capability call type. The only valid value is ALLBC.
TMTMPVAR			TREATMENT MAP

TMTMAP (continued)

Field descriptions

Field	Subfield or refinement	Entry	Explanation and action
	FORMAT	ISUP or PRI	This field determines the protocol format. Enter ISUP or PRI.
	TMTPROC	LOCAL, NOLOCAL, ISLOCAL, INTLOCAL	This field determines the treatment for the ISUP or PRI protocol format and procedure. Enter the treatment as follows: • Enter LOCAL if the treatment is applied locally and according to datafill in table TMTCNTL.TREAT. An inband tone or announcement is generated depending on the treatment code in table TMTCNTL.TREAT. No other datafill is required. • Enter NOLOCAL if treatment is applied from a switch closer to the calling party. Refer to TMTPROC=NOLOCAL, ISLOCAL, or INTLOCAL for refinement datafill. • Enter ISLOCAL if ISDN local treatment is applied to the calling party. Refer to TMTPROC=NOLOCAL, ISLOCAL, or INTLOCAL for refinement datafill. • Enter INTLOCAL if interworking local treatment is applied to the calling party. Refer to TMTPROC=NOLOCAL, ISLOCAL, or INTLOCAL for refinement datafill.

FORMAT=ISUP and TMTPROC=NOLOCAL, ISLOCAL, or INTLOCAL

ISUP normal event class (0 to 31)

If the entry in field FORMAT is ISUP, the entry in field TMTPROC is any entry other than LOCAL, and the class is normal event (0 to 31), datafill the following refinements.

FORMAT=ISUP and TMTPROC=NOLOCAL, ISLOCAL, or INTLOCAL refinements

Field	Subfield or refinement	Entry	Explanation and action
	CAUSE		ISUP CAUSE
		ADDINCOM	ADDRESS_INCOMPLETE. This cause indicates that the called party cannot be reached because the number is not in a valid format or is not complete.
		CALLREJ	CALL_REJECTED. This cause indicates that the equipment sending this cause does not wish to accept this call, although it could have accepted the call because the equipment sending this cause is neither busy or incompatible.
		DOOSRVC	DEST_OUT_OF_SERVICE. Destination out of service cause indicates that the called party cannot be reached because the interface to the destination is not functioning correctly. The term “not functioning correctly" indicates that a signaling message could not be delivered to the called party; this could be caused by a physical layer or data link layer failure at the called party, user equipment offline, or other.
		FACREJ	FACILITY_REJECTED. Customer interface facility rejected. This cause indicator is sent on receipt of a facility request message from a signaling link.
		MISDTRPR	MISDIALED_TRK_PREFIX. Misdialed trunk prefix. Not specified for North American networks.

TMTMAP (continued)

FORMAT=ISUP and TMTPROC=NOLOCAL, ISLOCAL, or INTLOCAL refinements

Field	Subfield or refinement	Entry	Explanation and action
		NOANSWER	NO_ANS_FROM_USER. No answer from user, user alerting. This cause is used if the called party has been alerted but does respond with a connect indication (answer). The ringing time-out value is set using office parameter RNG_TMEOUT_NO_OF_SECS in table OFCENG. The network sends a call clearing message to the calling user.
		NORMCLR	NORMAL_CLEARING. Normal call clearing. This cause indicates that the call is being cleared because one of the users involved in the call has requested that the call be cleared. In a normal situation, the source of this cause is not the network.
		NRTODEST	NR_TO_DESTINATION. No route to destination. This cause indicates that the called party cannot be reached because the network through which the call has been routed does not serve the destination desired. This cause is supported on a network-dependent basis.
		NOUSRESP	NO_USER_RESPONDING. No user responding. This cause is used if a called party does not respond to a call establishment message with either an alerting or connect indication within the prescribed period of time.
		NORMUNSP	NORMAL_UNSPECIFIED. Normal, unspecified. This cause is used to report a normal event only if no other cause in the normal class applies.
		NUMCHANG	NUMBER_CHANGED. Number changed. This cause is returned to a calling party if the called number indicated by the calling party is no longer assigned. The new called number can optionally be included in the diagnostic field. If a network does not support this capability, an unallocated number must be used.

TMTMAP (continued)

FORMAT=ISUP and TMTPROC=NOLOCAL, ISLOCAL, or INTLOCAL refinements

Field	Subfield or refinement	Entry	Explanation and action
		NRTOTN	NR_TO_TRANSIT_NTWK. No route to specified transit network. This cause indicates that the equipment sending this cause has received a request to route the call through a particular transit network, either because the transit network does not exist, or because the particular transit network, while it does exist, does not serve the equipment that is sending the cause. This cause is supported on a network-dependent basis.
		SSINFTN	SEND_SPECIAL_INFO_TONE. Send special information tone. This cause indicates that the called party cannot be reached for reasons that are of long-term nature and that the special information tone should be returned to the calling party.
		UNALLOC	UNALLOCATED_NUMBER. Unallocated number. This cause indicates that the called party cannot be reached, although the number is in a valid format, because it is not currently assigned (unallocated).
		USERBUSY	USER_BUSY. User busy. This cause is used if the called party has indicated the inability to accept another call. It is noted that the user equipment is compatible with the call.
		XLAFAIL	TRANSLATION_FAILURE. This cause occurs when an intermediate switch receives an initial address message (IAM) containing an ISUP hop counter (HC) value, and the HC value has expired. This causes a release (REL) message to be sent back through the network with a cause value set to ``Exchange routing error" and a coding standard of CCITT.

TMTMAP (continued)

FORMAT=ISUP and TMTPROC=NOLOCAL, ISLOCAL, or INTLOCAL refinements

Field	Subfield or refinement	Entry	Explanation and action
		XLAFAIL_ ANSI	TRANSLATION_FAILURE. This cause occurs when an intermediate switch receives an initial address message (IAM) containing an ISUP hop counter (HC) value, and the HC value has expired. This causes a release (REL) message to be sent back through the network with a cause value set to ``Exchange routing error'' and a coding standard of National (ANSI).
		VACANT	VACANT_CODE
		DESTMISS	DESTINATION_MISSING
	LOCATION		Refer to section LOCATION and LOG datafill for FORMAT=ISUP.
	LOG		Refer to section LOCATION and LOG datafill for FORMAT=ISUP.

ISUP resource unavailable class (32 to 47)

If the entry in field FORMAT is ISUP, the entry in field TMTPROC is any entry other than LOCAL, and the class is resource unavailable (32 to 47), datafill the following refinements.

Class ISUP resource unavailable

Field	Subfield or refinement	Entry	Explanation and action
	CAUSE		ISUP CAUSE
		CHANUNAV	REQ_CHANNEL_UNAVAIL. Requested channel unavailable. Not specified.
		NOCIRCAV	NO_CIRCUIT_AVAILABLE. No circuit available. This cause indicates that there is no appropriate circuit presently available to handle the call.
		NPMPTCKT	NO_PREEMPT_CIRCUIT_AVAILABLE

Class ISUP resource unavailable

Field	Subfield or refinement	Entry	Explanation and action
		NTWKOOO	NTWK_OUT_OF_ORDER. Network out of order. This cause indicates that the network is not functioning correctly and that the condition is likely to last a relatively long period of time. Immediately attempting the call again is not likely to be successful.
		PREEMPT	PREEMPTION. This cause indicates that the equipment sending this cause has pre-empted the circuit for a new call and the existing call should be cleared.
		RESUNAV	RESOURCE_UNAVAILABLE. Resource unavailable, unspecified. This cause is used to report a resource unavailable event only when no other cause in the resource unavailable class applies.
		SWEQCONG	SWITCHING_EQUIP_CONG. Switching equipment congestion. This cause indicates that the switching equipment generating this cause is experiencing a period of high traffic.
		TEMPFAIL	TEMPORARY_FAILURE. Temporary failure. This cause indicates that the network is not functioning correctly and that the condition is not likely to last a long time. The user can attempt another call almost immediately.
		UINFDISC	USER_INFO_DISCARDED. User information discarded. This cause indicates that the network could not deliver user information to the remote user as requested. The type of information that could not be delivered includes user-to-user information, low-layer compatibility, high-layer compatibility, or subaddress, as indicated in the diagnostic. The particular type of user information discarded is optionally included in the diagnostic.

TMTMAP (continued)

Class ISUP resource unavailable

Field	Subfield or refinement	Entry	Explanation and action
	LOCATION		Refer to section LOCATION and LOG datafill for FORMAT=ISUP.
	LOG		Refer to section LOCATION and LOG datafill for FORMAT=ISUP.

ISUP service not-available class (48 to 63)

If the entry in field FORMAT is ISUP, the entry in field TMTPROC is any entry other than LOCAL, and the class is service not-available (48 to 63), datafill the following refinements.

Class ISUP service unavailable

Field	Subfield or refinement	Entry	Explanation and action
	CAUSE		ISUP CAUSE
		BCNAUTH	BC_NOT_AUTHORIZED. Bearer capability not authorized. This cause indicates that the user has requested a bearer capability that is implemented by the equipment that generated this cause but the user is not authorized to use it.
		BCNAVAIL	BC_NOT_PRESENTLY_AVAIL. Bearer capability not presently available. This cause indicates that the user has requested a bearer capability that is implemented by the equipment that generated this cause, but it is not available at this time.
		BCINCOM	BC_INCOMPATIBLE_WITH_REQ
		ICGBARD	INCOMING_CALLS_BARRED
		OGCBARD	OUTGOING_CALLS_BARRED
		SONAVAIL	SERV_OPT_NOT_AVAIL. Service or option not available, unspecified. This cause is used to report a service or option not available event only if no other cause in the service or option not available class applies.

Class ISUP service unavailable

Field	Subfield or refinement	Entry	Explanation and action
	LOCATION		Refer to section LOCATION and LOG datafill for FORMAT=ISUP.
	LOG		Refer to section LOCATION and LOG datafill for FORMAT=ISUP.

ISUP service not-implemented class (64 to 79)

If the entry in field FORMAT is ISUP, the entry in field TMTPROC is any entry other than LOCAL, and the class is service not-implemented (64 to 79), datafill the following refinements.

Class ISUP service not implemented

Field	Subfield or refinement	Entry	Explanation and action
	CAUSE		ISUP CAUSE
		BCNIMPL	BC_NOT_IMPLEMENTED. Bearer capability not implemented. This cause indicates that the equipment sending this cause does not support the bearer capability requested.
		CHNLNIMP	CHNLTYPE_NOT_IMPL. Channel type not implemented, unspecified.
		FACNIMP	FACILITY_NOT_IMPL. Facility not implemented. This cause indicates that the requested facility is not implemented and, therefore, cannot be accessed at this time.
		RESBCINF	RESTRICTED_BC_INFO. Restricted bearer capability information. Only restricted digital information bearer capability is available. This cause indicates that the calling party has requested an unrestricted version of the requested bearer capability.
		SONIMPL	SERV_OPT_NOT_IMPL. Service or option not implemented, unspecified. This cause is used to report a service or option not-implemented event only if no other cause in the service or option not-implemented class applies.

TMTMAP (continued)

Class ISUP service not implemented

Field	Subfield or refinement	Entry	Explanation and action
	LOCATION		Refer to section LOCATION and LOG datafill for FORMAT=ISUP.
	LOG		Refer to section LOCATION and LOG datafill for FORMAT=ISUP.

ISUP invalid message class (80 to 95)

If the entry in field FORMAT is ISUP, the entry in field TMTPROC is any entry other than LOCAL, and the class is invalid message (80 to 95), datafill the following refinements.

Class ISUP invalid message

Field	Subfield or refinement	Entry	Explanation and action
	CAUSE		ISUP CAUSE
		INCOMDST	INCOMPATIBLE_DEST. Incompatible destination. This cause indicates that the equipment sending this cause has received a request to establish a call that has low-layer compatibility or high-layer compatibility attributes (for example, data rate) that cannot be used for this call.
		INVCRVAL	INVALID_CALL_REF_VALUE. Invalid call reference value. This cause indicates that the equipment sending this cause has received a message with a call reference that is not currently in use.
		INVMSG	INVALID_MESSAGE. Invalid message, unspecified. This cause is used to report an invalid message event only if no other cause in the invalid message class applies.
		USERNCUG	USER NOT MEMBER OF CUG. CDN user not in CUG.

Class ISUP invalid message

Field	Subfield or refinement	Entry	Explanation and action
	LOCATION		Refer to section LOCATION and LOG datafill for FORMAT=ISUP.
	LOG		Refer to section LOCATION and LOG datafill for FORMAT=ISUP.

ISUP protocol error class (96 to 111)

If the entry in field FORMAT is ISUP, the entry in field TMTPROC is any entry other than LOCAL, and the class is protocol error (96 to 111), datafill the following refinements.

Class ISUP protocol error

Field	Subfield or refinement	Entry	Explanation and action
	CAUSE		ISUP CAUSE
		INVPARMC	INV_PARM_CONTENTS. Invalid parameter contents. This cause indicates that the equipment sending this cause has received a parameter whose contents are invalid. This is because either the parameter is not defined, or it is defined, but not implemented by the equipment sending the cause.
		MSGNIMPL	MSGTYPE_NOT_IMPL. Message type non-existent or not implemented. This cause indicates that the equipment sending this cause has received a message with a message type it does not recognize. This is because either the message is not defined, or it is defined, but not implemented by the equipment sending this cause.
		PARMNIMP	PARAMETER_NOT_IMPL. Parameter non-existent or not implemented. This cause indicates that the equipment sending this cause has received a message with optional parameters it does not recognize. This is because either the parameter name is not defined, or it is defined, but not implemented by the equipment sending the cause.

TMTMAP (continued)

Class ISUP protocol error

Field	Subfield or refinement	Entry	Explanation and action
		PNIPASS	PARM_NOT_IMPL_PASSED_ON. Parameter not implemented passed on. This cause can be due to either of the following events: • An invalid circuit indicator is received. • A tele-service indicator is received in an Initial Address message (IAM).
		PROTERR	PROTOCOL_ERROR. Protocol error, unspecified. This cause is used to report a protocol error event only if no other cause in the protocol error class applies.
	LOCATION		Refer to section LOCATION and LOG datafill for FORMAT=ISUP.
	LOG		Refer to section LOCATION and LOG datafill for FORMAT=ISUP.

ISUP interworking class (112 to 127)

If the entry in field FORMAT is ISUP, the entry in field TMTPROC is any entry other than LOCAL, and the class is interworking (112 to 127), datafill the following refinements.

Class ISUP interworking

Field	Subfield or refinement	Entry	Explanation and action
	CAUSE		ISUP CAUSE
		INTWUNSP	INTERWORKING_UNSPEC. Interworking, unspecified. This cause indicates there is interworking with a network that does not provide a cause for action it takes. The precise cause for the message cannot be determined.
	LOCATION		Refer to section LOCATION and LOG datafill for FORMAT=ISUP.
	LOG		Refer to section LOCATION and LOG datafill for FORMAT=ISUP.

LOCATION and LOG datafill for FORMAT=ISUP

If the entry in field format is ISUP and the entry in field TMTPROC is any entry other than LOCAL, datafill the following refinements after the CAUSE refinement.

LOCATION and LOG datafill for FORMAT=ISUP

Field	Subfield or refinement	Entry	Explanation and action
	LOCATION	LOCLNET,END_USER, LCL_PRIV_NET, TRANS_NET, REM_LCL_NET, REM_PRIV_NET, LCL_INT, INTL_NET, SPARE_1, SPARE_2, UNKNOWN	CAUSE INDICATOR LOCATION. Enter the LOCATION value included in the Cause Indication Parameter (CIP) included in ISUP ACM (CCS7 Address Complete Message) and REL (CCS7 Release message), if the message is sent as part of a treatment. The LOCATION field is stored as a unique 4-bit value in the CIP. The value of the LOCATION field varies with call scenarios, but the common denominator of all these scenarios is that the public network is serving the local user. Enter LOCLNET if the cause value in the Release message is to reference a local public switching office. The default value is LOCLNET.
	LOG	Y or N	LOG. Generate log. Enter Y to generate a TRK 138 log if a release with cause is sent. Otherwise, enter N.

FORMAT=PRI and TMTPROC=NOLOCAL, ISLOCAL, or INTLOCAL

If the entry in field FORMAT is PRI, the entry in field TMTPROC is any entry other than LOCAL, datafill the following refinements.

FORMAT=PRI and TMTPROC=NOLOCAL, ISLOCAL, or INTLOCAL

Field	Subfield or refinement	Entry	Explanation and action
	CAUSE		PRI CAUSE
		UANUM	UNALLOCATED_NUMBER. Unallocated number. This cause indicates that the called party cannot be reached, although the number is in a valid format, because it is not currently assigned (unallocated).

TMTMAP (continued)

FORMAT=PRI and TMTPROC=NOLOCAL, ISLOCAL, or INTLOCAL

Field	Subfield or refinement	Entry	Explanation and action
		USERBUSY	USER_BUSY. User busy. This cause is used if the called party has indicated an inability to accept another call. The user equipment is compatible with the call.
		INCNUMB	INCOMPLETE_NUMBER. This cause indicates that the called party cannot be reached because the number is not in a valid format or is not complete.
		NORMUNSP	NORMAL_UNSPECIFIED. Normal, unspecified. This cause is used to report a normal event only if no other cause in the normal class applies.
		NOCHCKAV	NO_CIRCUIT_OR_CHANNEL_AVAILABLE. No circuit or channel available. This cause indicates that there is no appropriate circuit channel presently available to handle the call.
		SWEQCONG	SWITCHING_EQUIP_CONG. Switching equipment congestion. This cause indicates that the switching equipment generating this cause is experiencing a period of high traffic.
		RESUNAV	RESOURCE_UNAVAILABLE. Resource unavailable, unspecified. This cause is used to report a resource unavailable event only when no other cause in the resource unavailable class applies.
		SONAVAIL	SERV_OPT_NOT_AVAIL. Service or option not available, unspecified. This cause is used to report a service- or option-not-available event only if no other cause in the service or option not available class applies.
		DESTMISS	DESTINATION_MISSING. Destination missing.
		MSGNCPST	MESSAGE_NOT_COMPATIBLE_WITH STATE. Message type not compatible with call state or message type non-existent or not implemented.

FORMAT=PRI and TMTPROC=NOLOCAL, ISLOCAL, or INTLOCAL

Field	Subfield or refinement	Entry	Explanation and action
		PROTERR	PROTOCOL_ERROR. Protocol error, unspecified. This cause is used to report a protocol error event only if no other cause in the protocol error class applies.
		NRTESTRN	NR_TO_TRANSIT_NTWK. No route to specified transit network. This cause indicates that the equipment sending this cause has received a request to route the call through a particular transit network. This request is made because either the transit network does not exist, or the particular transit network, while it does exist, does not serve the equipment that is sending the cause. This cause is supported on a network-dependent basis.
		NORMCLR	NORMAL_CLEARING. Normal call clearing. This cause indicates that the call is being cleared because one of the users involved in the call has requested that the call be cleared. In a normal situation, the source of this cause is not the network.
		NOUSRESP	NO_USER_RESPONDING. No user responding. This cause is used if a called party does not respond to a call establishment message with either an alerting or connect indication within the prescribed period of time.
		CALLREJ	CALL_REJECTED. This cause indicates that the equipment sending this cause does not wish to accept this call, although it could have accepted the call because the equipment sending this cause is neither busy or incompatible.
		NUMCHANG	NUMBER_CHANGED. Number changed. This cause is returned to a calling party if the called number indicated by the calling party is no longer assigned. The new called number can optionally be included in the diagnostic field. If a network does not support this capability, an unallocated number must be used.

TMTMAP (continued)

FORMAT=PRI and TMTPROC=NOLOCAL, ISLOCAL, or INTLOCAL

Field	Subfield or refinement	Entry	Explanation and action
		FACREJ	FACILITY_REJECTED. Customer interface facility rejected. This cause indicator is sent on receipt of a facility request message from a signaling link.
		RESPSENQ	RESPONSE_TO_STATUS_ENQUIRY. Response to STATUS ENQUIRY.
		UINFDISC	USER_INFO_DISCARDED. User information discarded. This cause indicates that the network could not deliver user information to the remote user as requested. The type of information that could not be delivered includes user-to-user information, low-layer compatibility, high-layer compatibility, or subaddress, as indicated in the diagnostic. The particular type of user information discarded is optionally included in the diagnostic.
		RCIRCNAV	REQ_CIRCUIT_UNAVAIL. Requested circuit unavailable, unspecified.
		RFACNSUB	REQUESTED_FACILITY_NOT_SUBSCRIBED. Requested facility not subscribed.
		ICGBARD	INCOMING_CALLS_BARRED
		BCNAUTH	BC_NOT_AUTHORIZED. Bearer capability not authorized. This cause indicates that the user has requested a bearer capability that is implemented by the equipment that generated this cause, but the user is not authorized to use that capability.
		BCNIMPL	BC_NOT_IMPLEMENTED. Bearer capability not implemented. This cause indicates that the equipment sending this cause does not support the bearer capability requested.
		CHNLNIMP	CHNLTYPE_NOT_IMPL. Channel type not implemented, unspecified.

FORMAT=PRI and TMTPROC=NOLOCAL, ISLOCAL, or INTLOCAL

Field	Subfield or refinement	Entry	Explanation and action
		RESBCINF	RESTRICTED_BC_INFO. Restricted bearer capability information. Only restricted digital information bearer capability is available. This cause indicates that the calling party has requested an unrestricted version of the requested bearer capability.
		SONIMPL	SERV_OPT_NOT_IMPL. Service or option not implemented, unspecified. This cause is used to report a service- or option-not-implemented event only if no other cause in the service- or option-not-implemented class applies.
		INVCRVAL	INVALID_CALL_REF_VALUE. Invalid call reference value. This cause indicates that the equipment sending this cause has received a message with a call reference that is not currently in use.
		IDCHNLNE	IDENTIFIED_CHANNEL_DOES_NOT_EXIST. Identified channel does not exist.
		INCOMDST	INCOMPATIBLE_DEST. Incompatible destination. This cause indicates that the equipment sending this cause has received a request to establish a call that has low-layer compatibility or high-layer compatibility attributes (for example, data rate) that cannot be used for this call.
		INCMSGUN	INVALID_MESSAGE. Invalid message, unspecified. This cause is used to report an invalid message event only if no other cause in the invalid message class applies.
		MANIEMSG	MANDATORY_INFO_ELEMENT_IS_MISSING. Mandatory information element is missing.
		MSGTYPNE	MESSAGE_TYPE_IS_NON_EXISTENT. Message type non-existent.
		INFELMNE	INFO_ELEMENT_NON_EXISTENT. Information element non-existent or not implemented.

TMTMAP (continued)

FORMAT=PRI and TMTPROC=NOLOCAL, ISLOCAL, or INTLOCAL

Field	Subfield or refinement	Entry	Explanation and action
		INVELCON	INVALID_INFO_ELEMENT_CONTENTS. Invalid information element contents.
		INTWUNSP	INTERWORKING_UNSPEC. Interworking, unspecified. This cause indicates there is interworking with a network that does not provide a cause for action it takes. The precise cause for the message cannot be determined.
		DESTOOS	DST_OUT_OF_SERV. Destination out of order.
		TEMPFAIL	TEMPORARY_FAILURE. Temporary failure. This cause indicates that the network is not functioning correctly and that the condition is not likely to last a long time. The user can attempt another call almost immediately.
		BCPRNAV	BC_NOT_PRESENTLY_AVAIL. Bearer capability not presently available. This cause indicates that the user has requested a bearer capability that is implemented by the equipment that generated this cause, but it is not available at this time.
		BCINCOM	BC_INCOMPATIBLE_WITH_REQ
		PREEMPT	PREEMPTION. This cause indicates that the equipment sending this cause has pre-empted the circuit for a new call and the existing call should be cleared.
		NPMPTCKT	NO_PREEMPT_CIRCUIT_AVAILABLE
		PMPTREUS	PREEMPT_REUSE
		VACANT	VACANT_CODE
		PFX1DLER	PREFIX_1_DIALED_IN_ERROR
		PFX1NDLD	PREFIX_1_NOT_DIALED
		SOVIOL	SERVICE_OPTION_VIOLATION

FORMAT=PRI and TMTPROC=NOLOCAL, ISLOCAL, or INTLOCAL

Field	Subfield or refinement	Entry	Explanation and action
		NRTEDEST	NR_TO_DESTINATION. No route to destination. This cause indicates that the called party cannot be reached because the network through which the call has been routed does not serve the destination desired.This cause is supported on a network-dependent basis.
		NOANSWER	NO_ANS_FROM_USER. No answer from user, user alerting. This cause is used if the called party has been alerted, but does not respond with a connect indication (answer). The ringing time-out value is set using office parameter RNG_TMEOUT_NO_OF_SECS in table OFCENG. The network sends a call clearing message to the calling user.
		RCVTMREX	RECOVERY_ON_TIMER_EXPIRY. Recovery on timer expiration.
		CHNLUNAC	CHANNEL_UNACCEPTABLE. Channel unacceptable.
		FACNIMP	FACILITY_NOT_IMPL. Facility not implemented. This cause indicates that the requested facility is not implemented and, therefore, cannot be accessed at this time.
		CALLAWRD	CALL_AWARDED. Call awarded and being delivered in an established channel.
		NSELUCRL	NON_SELECTED_USER_CLEARING. Non-selected user clearing.
		NTWKOOO	NTWK_OUT_OF_ORDER. Network out of order. This cause indicates that the network is not functioning correctly and that the condition is likely to last a relatively long period of time. Immediately attempting the call again is not likely to be successful.
		QSRVNAV	QUALITY_OF_SERVICE_UNAVAILABLE. Quality of service unavailable.
		SUSCEXST	SUSPENDED_CALL_EXISTS. A suspended call exists, but the call's identity does not.

TMTMAP (continued)

FORMAT=PRI and TMTPROC=NOLOCAL, ISLOCAL, or INTLOCAL

Field	Subfield or refinement	Entry	Explanation and action
		CLIDINUS	CALL_IDENTITY_IN_USE. Call identity in use.
		NCLSUSP	NO_CALL_SUSPENDED. No call suspended.
		CCLIDCLR	CALL_HAVING_CALL_IDENTITY_CLEARED. Call having the requested call identity has been cleared.
		INVTRNWK	INVALID_TRANSIT_NETWORK_SELECTION. Invalid transit network selection.
		OGCBARD	OUTGOING_CALLS_BARRED
		USERNCUG	USER NOT MEMBER OF CUG. CDN user not in CUG.
	LOCATION	LOCLNET,END_USER,LCL_PRIV_NET, TRANS_NET, REM_LCL_NET, REM_PRIV_NET, LCL_INT, INTL_NET, SPARE_1, SPARE_2, UNKNOWN	CAUSE INDICATOR LOCATION. Enter the LOCATION value included in the Cause Indication Parameter (CIP) included in the PRI message, if the message is sent as part of a treatment. The LOCATION field is stored as a unique 4-bit value in the CIP. The value of the LOCATION field varies with call scenarios, but the common denominator of all these scenarios is that the public network is serving the local user. Enter LOCLNET if the cause value in the Release message is to reference a local public switching office. The default value is LOCLNET.
	LOG	Y or N	LOG. Generate log. Enter Y to generate a TRK 138 log if a release with cause is sent. Otherwise, enter N.

Datafill example

The following example shows datafill for table TMTMAP.

MAP display example for table TMTMAP

```
TMTMPKEY                                              TMTMVAR
_____________________________________________________________

 Q764 UNDT ALLBC ISUP NOLOCAL  NORMUNSP LOCLNET N
 Q764 NOSC ALLBC ISUP NOLOCAL NOCIRCAV LOCLNET N
 Q764 MSCA ALLBC ISUP LOCAL
 Q931 UNDT ALLBC PRI INTLOCAL UANUM END_USER Y
 Q931 BUSY ALLBC PRI NOLOCAL NILCAUSE LOCLNET N
 Q767 GNCT ALLBC ISUP NOLOCAL ADDINCOM LOCLNET Y
```

Table history

SN07 (DMS)

Added new cause value XLAFAIL_ANSI to map cause value of “exchange routing error” using a coding standard of National (ANSI) if needed. CR Q00760514-10.

UCS09

TMT field was updated for table TMTMAP (AX0953).

UCS08

Updated the PROTOCOL field.

UCS06

Added information for PRI protocol

TODHEAD

Table name

Time of Day Head Table

Functional description

Time of Day system

The Time of Day (TOD) feature is provided in switching units with the following software packages:

- Integrated Business Network (IBN) Time of Day Routing (software package NTX433AA)
- IBN Time of Day Network Class of Service (NCOS) (software package NTX434AA)
- International switching units with Time of Day Routing (software package NTX488AA)
- DMS-300 switching units with Time of Day and Percentage Routing (software package NTX295AA)
- Europe telecommunications standard institute (ETSI) integrated services digital networks user part (ISUP) Network Advice of Charge (NAOC) Tariff and Time of Day Switchover Percentage Routing

The Time of Day system is dependent on four other tables:

- DAYTYPES
- DAYOWEEK
- DAYOYEAR
- TIMEODAY

Feature TOD allows or denies route choices, NCOS screening choices. In a switching unit with international translations and the DMS-100 Metering System, the TOD feature allows or denies Tariff Changeover Control, also called Time of Day Changeover, based on the time of day. The times can be set according to the rate schedules of the carriers (public network and other common carriers) accessible to the user. The changeovers can also be varied based on the day of the week or day of the year, to account for weekends and holidays.

The TOD system specifies changeovers for up to 16 results (time ranges) based on the time of day and day of week or day of year. Different results can be defined for any day, or set of days on a weekly basis, or for any specific day of the year.

The TOD system allows special days of the year to override the normal day type. For example, if Christmas (December 25) is on a Sunday, the following day types are defined:

- SATURDAY (Saturday)
- SUNDAY (Sunday)
- WEEKDAY (weekday—Monday to Friday inclusive)
- STATHOL (December 25)

If no override was allowed, then normal tariff (SUNDAY) would apply. Allowing the day of year override causes holiday tariffs to apply.

The user must reconcile variables, for example Standard, Daylight, Central Time, Greenwich Mean Time, and holidays such as Easter, Thanksgiving, and Labor day, on a yearly basis. The user must define separate TOD systems for remotes and other switches that operate in different time zones.

Table SFWALARM has two entries that define the actions related to the TOD system:

- The entry in field TODSYS defines the action taken by the alarm system when the TOD system shuts itself down. It is accompanied by log AUDT169 which indicates that the TOD system has been shut down.
- The entry in field TODSYS defines the action taken by the alarm system when the TOD system shuts down a TOD feature when the trap threshold for that feature is exceeded. It is accompanied by log AUDT168 which indicates the feature that was disabled.

Routing

TOD routing and percentage routing allows cost-effective use of facilities available by allowing or denying route choices based on the time of day. The times can be set according to the rate schedules of the carriers (public network and other common carriers) accessible to the user. In order to provide the most cost-effective routing, route lists must allow variable routing as a function of time of day. This is achieved by defining different results for the same times on different days of the week, or days of the year.

Percentage routing is especially required when splitting traffic between several common carriers to another country.

TOD routing and percentage routing for IBN is done from table IBNRTE as a refinement of the conditional selector (CND) with a TOD sub-selector for Time of Day and RND sub-selector for Random-conditional routing.

TODHEAD (continued)

TOD routing and percentage routing for DMS-300 is done from tables OVR0-OVR9 as a refinement of selector CND with a TOD sub-selector for Time of Day and RND sub-selector for Random-conditional routing.

This allows efficient routing to other routes in tables IBNRTE or OVR0-OVR9 as a function of time of day. The day can be partitioned into a maximum of 1440 (1 min apart over 24 h) segments, with a maximum of 16 different results (time ranges) based on the time of day and day of the week or year. Different results can be defined for any day, or set of days on a weekly basis or for any specific day of the year.

The TOD IBN NCOS Screening feature allows the operating company to impose a more restrictive NCOS on calls made after normal business hours. This type of routing allows flexible screening of class of service values, so that calls having a more restrictive NCOS could be routed to treatments, and calls with a less restrictive NCOS could be routed over a particular trunk group (that is, no extra translator is needed for screening).

The International TOD DMS-100 Metering System feature which allows the operating company to implement Tariff Changeover Control, (also called Time of Day Changeover), which refers to the time of day and type of day changes which must be performed to determine the current tariff.

The ETSI ISUP Network Advice of Charge Tariff and Time of Day Switchover (NAOC) feature determines charge related information between a charge determination point (CDP) and a charge generation point (CGP). The CDP determines which tariff to apply for a call. The CGP is an exchange where the charging information received from the network converts into a format delivered to the actual subscriber.

Restrictions

The following restrictions apply to the TOD system:

- Consecutive changeovers to a network cannot take place more than once every half hour.
- Time of Day changes must occur on the quarter hour (this is enforced by table control).
- A maximum of eight changeovers over each 24-h period is enforced.
- The TOD system overrides are not allowed if metering is involved.

To prevent the changeover system from overloading the message system, changeover requests are spread over a changeover period. At the beginning of this changeover period, a snapshot of the current relevant metering tables is

taken. Changes made to the metering tables during this period take effect at the end of the current period. This ensures system integrity in all cases.

Due to the static nature of tariff tables, and to maintain a degree of security on the metering system, no abortive action is provided for the user once a changeover period is in effect. The user can only make corrective actions after the current period and prior to the next changeover period. (This does not preclude the user from specifying a changeover period immediately following the current changeover period.)

Tables DAYTYPES, TODHEAD, DAYOWEEK, and TIMEODAY show examples of datafill for routing service calls (for example, Repair Service) differently after business hours.

Functional description of table TODHEAD

Table TODHEAD is the head table for the Time of Day system. It defines how tables DAYOWEEK, DAYOYEAR, and TIMEDAY are used.

If a switching unit has the universal translations and the metering utilities, all metering networks datafilled in table LNETWORK must have a corresponding entry in this table with field TODTYPE format set to MTR. Failure to do so results in no charges for calls using metering on that network.

Newly added TOD names (field TODNAME) are in disabled status. When all the TOD and related tables are datafilled, enter CI (command interpreter) command TDQ TODRESET *todname* to start up the new TODNAME.

A disabled TOD name may react differently from an overridden one depending on the feature. If override is required, do not disable the TOD name. (With IBN TOD routing, a disabled TOD name always causes the conditional route to fail; the branch is never taken). A disabled TOD name can be overridden.

The default data may be changed at anytime, but the TOD type (field TODTYPE) must remain the same.

If the entry is disabled by the TOD system, it is re-enabled by a change, even if the data was not modified. The TOD name must be restarted manually using the CI command TDQ TODRESET *todname*.

If the entry is disabled or overridden manually, the status of the TOD name is not changed. (A TDQ TODRESET command must be entered for the TOD scheduler to resume maintenance of the system).

TODHEAD (continued)

The day type vector (field DAYTYPE) cannot be changed. Attempted changes are ignored. Use the following procedure to add a day type to a TOD name:

1. Dump the current data for that TOD name from all TOD tables except DAYTYPES.
2. Dump all the data that references that TOD name in non-TOD tables. (The tables affected depend on the TOD name's feature.)
3. Delete the just-dumped data (including the TOD head entry [field TODHEAD]).
4. Add the TODHEAD entry with the new, enlarged day type list.
5. Restore the data for the other tables.

Recommended practice is to enter some spare day types (for example, spare1, spare2). These can be renamed if required during the next dump and restore or BCS conversion.

Partitioned table editor

If feature BC1459 (Partitioned Table Editor) has been purchased for an IBN switch, the ownership of each tuple in this table is defined in tables DATAOWNR and OWNTAB as follows:

- The entries in table DATAOWNR that apply to table TIMEODAY are those in which the entry in field TABNAME is equal to the entry in field TODNAME, and both are equal to the value of field TODNAME in this table.
- The entry in field TABNAME in table OWNTAB must be TODHEAD.

Datafill sequence and implications

Enter the data for the following tables before table TODHEAD:

- COSMAP
- DAYTYPES
- LNETWORK
- MTARFNUM

Enter the data for the following tables in this order to activate the NAOC feature:

- CARNAME
- RESNAME
- TARFINDX

- TODHEAD
- TIMEODAY

Table size

0 to 255 tuples

Prior to BCS35, the memory size for this table is defined by the user in table DATASIZE.

TODHEAD (continued)

Datafill

The following table lists datafill for table TODHEAD.

Field descriptions (Sheet 1 of 3)

Field	Subfield or refinement	Entry	Explanation and action
TODNAME		see subfield	*Time of day name key* This field consists of subfield TODNAME. This is the key to the table.
	TODNAME	alphanumeric (1 to 8 characters) or blank	*Time of day name* For the first record for the Integrated Business Network (IBN) or DMS-300 Time of day (TOD) or Percentage Routing entry, enter the name assigned to the TOD system. This TOD name is assigned in one or more entries in table IBNRTE for an IBN switching unit, and in tables OVR0-OVR9 for a DMS-300 switching unit. For the first record for the Time of Day Network Class of Service (NCOS) Screening entry, enter the name assigned to the time of day system. This name is assigned to the customer group in table CUSTHEAD with the option TODNCOS. For the first record for the Time of Day DMS-100 Metering System entry, enter the name assigned to the time of day system. If the TODTYPE is NAOC, the TODNAME keeps the CARRIER or RESELLER name for this record as entered in either table CARNAME or RESNAME. For all other records, leave the field blank.

Field descriptions (Sheet 2 of 3)

Field	Subfield or refinement	Entry	Explanation and action
TODTYPE		MTR, RTE, NCOS, NAOC	*Time of day type* For the first record for the International TOD DMS-100 Metering System entry, enter the TOD type MTR (meter) and datafill refinements NETWORK and TNTNUM. This entry keeps the Tariff Change Over index. For the first record for the IBN or DMS-300 TOD or Percentage routing entry, enter the TOD type RTE (route) and datafill refinement TIME. For all other records, leave field blank.
	LNETNAME	alphanumeric (1 to 8 characters) or blank	*Logical metering network* If the entry in field TODTYPE is MTR, datafill this refinement. For the first record for the Time of Day DMS-100 Metering entry, enter the Logical Metering Network name assigned to this TOD DMS-100 Metering System entry. This name is assigned in table LNETWORK. For all other records, leave the field blank.
	TNTNUM	alphanumeric (1 to 8 characters)	*Tariff number table number* If the entry in field TODTYPE is MTR, datafill this refinement. For the first record for the Time of Day DMS-100 Metering System entry, enter the number of the Tariff Number table that applies to the entry. TNTNUM is defined in table MTARFNUM field TABLEKEY. For all other records, leave the field blank. Go to field DAYTYPES.

TODHEAD (continued)

Field descriptions (Sheet 3 of 3)

Field	Subfield or refinement	Entry	Explanation and action
	COSMAP	alphanumeric (1 to 16 characters) or blank	*Class of service mapping* If the entry in field TODTYPE is NCOS, datafill this refinement. For the first record for the Time of Day NCOS screening entry, enter the Class of Service name assigned to TOD NCOS screening. For all other records, leave the field blank. Go to field DAYTYPES.
	TCOINDX	0 to 15	If the entry in field TODTYPE is NAOC, datafill this refinement. The value entered must be already used by an entry for the same carrier or carrier reseller in table TARFINDX. For all other records, leave the field blank.
	TIME	0 to 9 A to F or blank	*Time* If the entry in field TODTYPE is RTE, datafill this refinement. For the first record for the Route entry, enter the time range applicable to the entry. For all other records, leave the field blank.
DAYTYPES		alphanumeric (1 to 8 characters)	*Types of day* Enter up to thirty-two day types assigned to this TOD route entry. One entry is required for each of the three TOD types datafilled in field TODTYPE. These day types are defined in table DAYTYPES. Examples are: WEEKDAY, WEEKEND, XMAS, HOLIDAY, JULY4, and SATDAY. If less than 32 TOD types are required, end the list with a $ (dollar sign).

Datafill example

The following example shows sample datafill for table TODHEAD.

The first tuple shows a typical entry for IBN and DMS-300 TOD and Percentage routing for TOD system GROUP1.

The second tuple shows a typical entry for an IBN TOD NCOS Screening entry for a TOD system with the name LONTODN.

The third tuple shows a typical entry for an International TOD DMS-100 Metering system for a TOD system with the name GOCTODN.

The fourth tuple specifies the datafill used if service calls (for example, repair service) is to be routed differently after business hours.

The fifth tuple shows the carrier or name for the NAOC feature.

The sixth tuple shows the reseller name for the NAOC feature.

MAP display example for table TODHEAD

```
TODNAME      TODTYPE           DAYTYPES
_____________________________________________________

GROUP1         RTE  0
                    (WEEKDAY) ( SATDAY) ( SUNDAY)$

LONTODN NCOS NCOSTODMAP
                    (WEEKDAY) ( SATDAY) ( SUNDAY)$

GOCTODN  MTR NATIONAL 2
                    (WEEKDAY) ( SATDAY) ( SUNDAY)$

REPAIR         RTE  0
                              (WEEKDAY) (WEEKEND)$
```

Table history

EUR012

The NAOC value for the TODTYPE field is new to table TODHEAD. This value is necessary to schedule a NETWORK AOC tariff changeover.

Field TOCIDX is new to table TODHEAD.

EUR006

The following fields were added to table TODHEAD:

- LNETNAME
- TNTNUM
- DAYTYPES

TODHEAD (end)

The range of values in field TODTYPE was changed to only include MTR or RTE.

The size of table TODHEAD was increased from 32 to 255 tuples.

BCS36

Table size was changed.

TOFCNAME

Table name

Terminating Office Name

Functional description

Table TOFCNAME stores the area code and office code for the switch. A terminating office number (TOFCNO) consists of both an area code and an office code. Table HNPACONT or table SNPANAME must define the area code.

Table TOFCNAME replaces table THOUGRP. Table DNROUTE stores all routing information originally stored in table THOUGRP.

Software optionality control (SOC) options NPE00001 and NPE00002 implement duplicate office code and table TOFCNAME expansion capabilities. When NPE00001 is active, you can datafill one office code against more than one area code in table TOFCNAME. When NPE00002 is active, you can datafill table TOFCNAME with up to 8151 entries.

Office parameter ACTIVE_DN_SYSTEM in table OFCENG controls the DN system in use on the switch. You can set this parameter to the following:

- NORTH_AMERICAN. In this occurrence, table TOFCNAME can store up to 100 entries (tuples)
- UNIVERSAL. In this case, the following occurs:
  - — If the state of SOC option NPE00002 is IDLE, table TOFCNAME can store up to 1024 entries
  - — If the state of SOC option NPE00002 is ON, table TOFCNAME can store up to 8151 entries

Note: Unless SOC option NPE00001 is active, the DMS switch does not allow two area codes to share the same office code.

Note: When the capacity of table TOFCNAME increases, the capacity of tables DNINV and DNROUTE decreases (from 1 000 000 to 300 000).

TOFCNAME (continued)

Local Number Portability

For Local Number Portability (LNP), it is preferable for the switch to use the universal directory number (DN) system with the North American dialing plan.

The DN is “ported-in" if you move the DN from a donor switch to a recipient switch . Option NONNATIVE in field OPTIONS is assigned to area code and office code entries for ported-in DNs.

Note: In North American applications, if table HOMELRN uses the resident area code and office code, you cannot change the resident area code and office code to nonresident.

Datafill sequence and implications

Datafill one or the other of the following tables before table TOFCNAME:

- HNPACONT
- SNPANAME

Table size

The size of table TOFCNAME depends on:

- the value of office parameter ACTIVE_DN_SYSTEM in table OFCENG
- if SOC option NPE00002 is active

The following table shows sizes for table TOFCNAME.

TOFCNAME size

value of ACTIVE_DN_SYSTEM	maximum size of TOFCNAME
NORTH_AMERICAN	100 tuples
UNIVERSAL	1024 tuples if NPE00002 is not active 8151 tuples if NPE00002 is active

Datafill

The following table lists datafill for table TOFCNAME.

Field descriptions (Sheet 1 of 2)

Field	Subfield or refinement	Entry	Explanation and action
AREACODE		0 to 9999999 (vector of up to 7 digits)	*Area code* Enter the area code. The area code (NPA) identifies a geographical area served by the switch. This field can contain one to seven digits. In an office that uses the North American numbering plan, the area code must be three digits. Enter an area code defined in table SNPANAME.
OFCCODE		0 to 9999999 (vector of up to 7 digits)or $	*Office code* Enter the office code. The area code region consists of a number of areas. The office code identifies the area served by the office. An office code can have from zero to seven digits. For an office that uses the North American numbering plan, the office code must contain three digits. Enter a number that is not used as an area code. For example, if the area code is 613, the office code cannot be 613. ***Note:*** Service interruption can occur if you enter an office code that is an area code. The switch can route calls to the wrong location because the switch cannot determine the termination point of the call. A tuple (AREACODE plus OFCCODE entry) cannot be an expansion or reduction of another entry. For example, if 200 34 (area code 200 plus office code 34) is a tuple, you cannot add the following tuples to the table: 20 03, 2003 45 or 20 034.
OPTIONS		NONNATIVE	*Ported-in DN* Enter NONNATIVE to identify a ported-in DN. End the tuple with a $ (dollar sign). ***Note:*** Translations ports in only DNs with nonnative NPA-NXX that reside on the switch.

TOFCNAME (continued)

Field descriptions (Sheet 2 of 2)

Field	Subfield or refinement	Entry	Explanation and action
		CODEHLDR	Enter CODEHLDR to indicate that an NPA-NXX is LERG assigned even though 1000 blocks may be pooled out to other switches. To assign the CODEHLDR option to a tuple the NPE00005 SOC option must be active.

Note:

The CODEHLDR option cannot be present with the NONNATIVE TOFCNAME option and vice versa.

Datafill example

The following example shows typical datafill for table TOFCNAME without ported-in DNs datafilled.

MAP display example for table TOFCNAME

```
AREACODE    OFCCODE                                  OPTIONS
_____________________________________________________________

     200        234                                        $
     784        324                                        $
     201        786                                        $
     613        621                                        $
     245        879                                        $
```

The following MAP display example shows typical datafill for table TOFCNAME with datafilled ported-in DNs.

In this example, all DNs for

- 613 621 are local to the switch
- 819 725 are not local to the switch (ported-in)

TOFCNAME (continued)

MAP display example for table TOFCNAME,

```
AREACODE      OFCCODE                                OPTIONS
_____________________________________________________________

    613           621                                     $
    819           725                      (NONNATIVE )   $
```

Table history

NA013

Option CODEHLDR is introduced by feature 59012574.

NA010

NA010 reduces the maximum number of tuples from 8171 to 8151. This reduction accomodates the allocating store on the POWERPC platform.

NA009

Added information on SOC options NPE00001 and NPE00002

NA007

Added field OPTIONS and option NONNATIVE and corrected the table capacity information.

Added error information.

TOFCNAME (end)

Supplementary information

The following table explains error messages that can occur when you attempt to datafill table TOFCNAME.

Error messages

Message	Explanation	User action
`This tuple will create an ambiguity with 613 621`	The area code and office code of the tuple being added isa superset of the area code and office code of a tuple already in table TOFCNAME.	Enter the tuple again, using a different area code, office code, or both.
`ERROR: This entry creates an ambiguity with a more precise entry and is not allowed.`	The area code and office code of the added tuple isa subset of the area code and office code of a tuple already in table TOFCNAME.	Enter the tuple again, using a different area code, office code, or both.
`This tuple will create a duplicate with 613 621ERROR: Duplicate office codes are not allowed while NPE00001 is idle`	The office code of the tuple being added is equal to or a superset of the office code of a tuple already in table TOFCNAME.	Activate NPE00001. Enter the tuple again.
`ERROR: This entry creates a duplicate office code with a more precise entry.Duplicate office codes are not allowed while NPE00001 is idle.`	The office code of the tuple being added is a subset of the office code of a tuple already in table TOFCNAME.	Activate NPE00001. Enter the tuple again.

TOLLFREE

Table name

Toll-free

Functional description

This table is a mechanism for trigger criteria checking when evaluating toll-free service triggers. The TOLLFREE table is a two-part key composed of a CAIN group and the beginning digit range for the tuple. The fields of the tuple store the ending digits for the digit range, and the trigger action.

Datafill sequence and implications

Table CAINGRP must be datafilled before table TOLLFREE.

Table size

Table TOLLFREE has a tuple size of 2k.

Datafill

The following table lists datafill for table TOLLFREE.

Field descriptions (Sheet 1 of 2)

Field	Subfield or refinement	Entry	Explanation and action
TOLLFREE_KEY			TOLL FREE KEY. This field is a 2-part key for table TOLLFREE. Enter values for CAIN_GROUP_TYPE and FROMDIGS:
		CAIN_GROUP_ TYPE,	CAIN GROUP TYPE. Enter valid CAIN_GROUP_TYPE from table CAINGRP.
		Vector of up to 10 digits (0 to 9).	FROM DIGITS. Enter the starting number used to define the address range.
TODIGS		Vector of up to 10 digits in the range 0 to 9.	TO DIGITS. Enter the starting number used to define the address range.
ACTION		IGNORE	IGNORE. Enter this value to exit the current level of CAIN group subscription and continue call processing.
		BLOCK	BLOCK. Send the call to Advanced Intelligent Network Final Treatment (AINF).
		QUERY	QUERY. Send a toll-free service request query message to the SCP.

TOLLFREE (end)

Field descriptions (Sheet 2 of 2)

Field	Subfield or refinement	Entry	Explanation and action
OPTIONS			OPTIONS. The supported option includes TRTMT.
		NIL	Enter NIL to remove an option.
	TRTMT	Enter treatment value.	TREATMENT. Enter one of the treatment codes defined in table TMTCNTL.TREAT, field TREATMT for blocked calls or in error processing. ***Note:*** TRTMNT option is only allowed when ACTION is BLOCK.

Datafill example

The following example shows sample datafill for table TOLLFREE.

MAP display example for table TOLLFREE

TOLLFREEKY	TODIGS	ACTION	OPTIONS
TFGRP	80	888	QUERY $
TFGRP1	0	9	QUERY $
TFGRP3	0	9	QUERY $

Table history

UCS1

Updated to include edtorial changes.

UCS09

Table TOLLFREE was added (AX1377).

TONES

Table name

Tones Table

Functional description

Table TONES defines tones that are generated by line or trunk peripheral modules.

The special tones listed below are generated on cards located on a trunk module (TM) or maintenance trunk module (MTM), and defined in table STN instead of table TONES:

- BVTONE: IBN busy verification tone
- CWT: call waiting tone
- DISTCWT: distinctive call waiting tone
- EBOT: executive busy override tone
- ERWT: expensive route warning tone
- OHQT: offhook queuing tone
- ROH: receiver offhook tone

The special tones listed below are generated on cards located on a TM or MTM, and are defined in table SVRCKT instead of table TONES:

- SVDTMF: DIGITONE outpulsing circuit
- SVOBSV: service observing circuit

Where field KIKEY in table KEY_ITEM table is datafilled with an entry of TONEKEY, the maximum number of tones that can be allocated is determined by the value of field SIZE in table KEY_ITEM.

Where field DATSKEY field in table DATASIZE is datafilled with an entry of TONES, memory for table TONES is allocated in accordance with the value of field SIZE in table DATASIZE.

To extend the length of the table, the size in the DATASIZE table must be increased and a cold restart performed.

Datafill sequence and implications

There is no requirement to datafill other tables prior to table TONES.

The following tables must be datafilled after table TONES.

- CLLIMTCE
- OFRT
- OFR2
- OFR3
- OFR4

Table size

0 to 20 tuples

United Kingdom

If the switching unit is a DMS-100 Switch in the United Kingdom and office parameter MARKET_OF_OFFICE in table OFCENG is set to UK PABX, the recommended values for the entry in table CUSTPROT with field TABNAME equal to TONES are shown in the following table.

UK PABX datafill for table CUSTPROT

Field name	Entry
TABNAME	TONES
READPROT	15
UPDTPROT	30
ALLPROT	30

Datafill

The following table lists datafill for table TONES.

Field descriptions

Field	Subfield or refinement	Entry	Explanation and action
CLLI		alphanumeric(1 to 16 characters)	*Common language location identifier* Enter the code assigned to the tone in table CLLI.
TRAFSNO		0 to 127	*Traffic separation number* LOCAL, TOLL, LOCAL/TOLL, GATEWAY, or INTERNATIONAL only: If switching unit has the optional Traffic Separation software feature, enter the outgoing traffic separation number 0 to 127 assigned to the tone. If traffic separation not required, enter 0 (zero). The range of values for the outgoing traffic separation number is dependent upon office parameter TFAN_OUT_MAX_NUMBER in table OFCENG. It is recommended that outgoing traffic separation numbers 1 to 9 be reserved for generic separation numbers. See table TFANINT for the assignment of incoming to outgoing traffic separation numbers. With the traffic separation feature, a peg count of all calls, by type of call, can be accumulated between an incoming source (incoming trunk or an originating line attribute) and an outgoing source (outgoing trunk, terminating line attribute, tone or announcement). Direct Dial (DD), Operator Assisted (OA) and No Prefix (NP) are the call types supported.
SEGTIME		10 to 250	*Segment time* Enter the duration of one segment of tone specified in multiples of 10 ms (for example: 20 = 200 ms).

Field descriptions

Field	Subfield or refinement	Entry	Explanation and action
OFFTIME		10 to 250	*Off time* Enter the duration of the no-tone period specified in multiples of 10 ms (for example: 20 = 200 ms).
TONEPATT		numeric (16 digits)	*Tone pattern* Enter a 16-digit string of 0s and 1s. Each digit corresponds to one segment of tone pattern and represents the binary state on the tone, where: 0 = tone off 1 = tone on
TONETYP		alphanumeric	*Tone type* Enter the type of tone generator required. New tones are added as necessary, and the the list below is not fully comprehensive. Since some of the tone generators listed below are mutually exclusive, only a subset of these tone generators can be found in a given software load.
		HI	*High tone* This is a general purpose high frequency tone generator.
		HZ400_5DB	*400 Hz tone, five decibels* This is the tone generator for 400 Hz at -5 dBm.
		INTL_ROH_ TONE	*International ROH tone* This is for use in an international DMS when the entry in field CLLI is IROH.
		LO	*Low tone* This is a general purpose low frequency tone generator.
		1024HZ_ TONE	Datafill this field for any CLLI when setting up the Bangladesh feature tones. This datafill is not active until you have set FEATURE_TONE_SET to BNGLDTC in table OCFENG.

Field descriptions

Field	Subfield or refinement	Entry	Explanation and action
		SILENT_ TONE	*Silent tone* Silence
OFFTONE		alphanumeric	*Off tone* Tone types are as for TONETYP
MAXDURN		1 to 255	*Maximum duration* Enter the maximum time in seconds that a call condense block can be attached. For information on office parameter NCCBS (Number of Call Condense Blocks), see table OFCENG. The maximum time duration for silent tone is 10 s.
MAXCONN		127	*Maximum connections* Enter 127 to satisfy the table editor. Entry values other than 127 are not valid. ***Note:*** This field is operative in tables ANNS and STN because members of such trunk groups represent real physical resources, but is not operative in table TONES because LM-generated tones do not represent real physical resources. The DMS maintains a count of tone usage but does not prohibit the number of users from exceeding MAXCONN.

Field descriptions

Field	Subfield or refinement	Entry	Explanation and action
FNTONID		alphanumeric	*Functional tone identity* This field is used for Succession Networks operation only. Enter a tone identity from the Unified Toneid range. For Succession Networks operation, CLLI and FNTONID are the only fields in this table that require datafill. This field has no impact on TDM operation ***Note:*** After an ONP in a Succession load, the FNTONID value defaults to TONE_NULL. This must be changed to a useful value, or a software error will occur in the GWC.
TONESGRP		Y or N	*Table TONESGRP* This field indicates whether there are additional tone definitions in table TONESGRP.

The Netherlands

The ‘engaged’ tuple should have TONETYP set to DIAL_TONE when the DUTCHMF and DUTCHMFC toneset is used. This changes the engaged (busy) tone heard by the subscriber from 450 Hz to 425 Hz, which is the standard busy tone frequency in the Dutch market.

Datafill examples

General example for Succession and DMS (TDM) loads

The example below shows datafill for DMS (TDM) and Succession loads. The datafill in bold is for Succession, as indicated by the fact that FNTONID is **not** TONE_NULL.

Note: Any provisioned tone that can be played to both TDM and Succession agents must have complete datafill.

Note: Tone types are not specific to TDM or Succession operation. For Succession operation, equivalent FNTONIDs can be defined for all tones.

MAP example for table TONES

```
CLLI TRAFSNO SEGTIME OFFTIME TONEPATT TONETYP OFFTONE MAXDURN MAXCONN
FNTONID TONESGRP
-----------------------------------------------------------------
120T0 0 25 25 101010 HI SILENT_TONE 30 30 TONE_NULL N
FRA0 0 25 25 101010 LO SILENT_TONE 30 30 TONE_NULL N
TSTONE 0 25 25 111100 HI SILENT_TONE 30 30 TONE_NULL N
BUSY 0 50 50 101010 LO SILENT_TONE 40 30 TONE_BSY N
OFLO 0 25 25 101010 LO SILENT_TONE 30 30 TONE_NULL N
TSECDT 0 65 65 000111 LO SILENT_TONE 10 10 TONE_NULL N
```

For Brazil tonesets

An example of DMS (TDM) datafill for the Brazil tonesets BRASMF and BRASMFC appears in the following figure.

MAP example for table TONES

```
CLLI TRAFSNO SEGTIME OFFTIME TONEPATT TONETYP OFFTONE MAXDURN MAXCONN

FNTONID TONESGRP

-----------------------------------------------------------------

ENGAGED 0 25 25 101010 UNUSED_TONE2 SILENT_TONE 40 30
TONE_NULL N

BRAGNCT 0 50 50 101010 UNUSED_TONE2 SILENT_TONE 40 30
TONE_NULL N

CONFMN 0 50 50 111111 CONFIRMATION_TONE SILENT_TONE 40 30
TONE_NULL Y

NROH 0 10 10 101010 UNUSED_TONE3 SILENT_TONE 40 30
TONE_NULL N

NOBT 2 25 25 101110 UNUSED_TONE2 SILENT_TONE 40 30
TONE_NULL N

BRAFNL 0 25 25 101110 UNUSED_TONE2 SILENT_TONE 40 30
TONE_NULL N

BRAFNL 0 25 25 101110 UNUSED_TONE2 SILENT_TONE 40 30
TONE_NULL N
```

FNTONID is TONE_NULL in each case for DMS (TDM) datafill. The CLLI entries in the example correspond to the following tones and signals:

- ENGAGED - Busy tone
- BRAGCNT - Congestion tone
- CONFMN - Confirmation tone
- NROH - Howler/ROH tone
- NOBT - Number Unobtainable tone
- BRAFNL - Inaccessible Code signal
- BRANACK - Unaccepted Programming signal

For Succession loads, only the CLLI and FNTONID fields are used. The equivalence between CLLIs and FNTONIDs in this case is as follows:

- ENGAGED - tone_bsy
- BRAGCNT - tone_congestion
- CONFMN - tone_confirmation

- NROH - tone_receiver_off_hook
- NOBT - tone_vacant
- BRAFNL - tone_nack
- BRANACK - tone_nack

Table history

SN06 (DMS)

New fields added: OFFTIME, OFFTONE, and FNTONID. Range for SEGTIME increased. Datafill examples updated to show both DMS (TDM) and Succession operation. Feature A59022704.

New tone type added for Bangladesh feature tones (feature A89007151)

SN04 (TDM)

Datafill example added for Brazil tonesets BRASMF and BRASMFC (feature 59033657).

TR533CIC

Table name

Translations and Routing 533 Carrier Identification Code Table (TR533CIC)

Functional description

TR533CIC provides the switch the ability to route calls based on a Carrier Identification Code (CIC) and a Local Access and Transport Area (LATA). The switch uses table TR533CIC to derive the STS, both national and international, for Intelligent Network (IN1) toll-free calls. The switch uses the CIC, when it receives one in an SCP response message, and the datafilled LATA to index the table and extract the Serving Translation Scheme (STS) for the call.

The key to the TR533CIC table is the CIC, received in the SCP response message, and the LATA datafilled on the originating trunk. Based on CIC and LATA, this table provides a new STS for national or international call types.

Datafill sequence and implications

Table OCCINFO's CARRNUM field must be datafilled before the key (CIC) can be entered in TR533CIC. An entry should be made in OCCNAME before OCCINFO is datafilled. After the CIC is entered into TR533CIC, no checks are made to prevent that CARRNUM from being deleted from OCCINFO. This would result in a tuple with an invalid CIC in TR533CIC.

Both national and international STS must be datafilled in table HNPACONT before they can be datafilled in table TR533CIC. There is no change to the table control code for tables OCCINFO and HNPACONT that would prevent the deletion of tuples from tables that correspond to the tuple values from table TR533CIC.

The TR533 CIC routing feature is activated only when Software Optionality Control (SOC) option "CIC routing," (option code) UTRS0001 is set to ON.

Table size

This table will accommodate up to 1000 tuples.

Field descriptions

The following table describes field names, subfield names, and valid data ranges for table TR533CIC.

TR533CIC (continued)

TR533CIC field descriptions (Sheet 1 of 2)

Field	Subfield or refinement	Entry	Explanation and action
KEY			KEY. KEY field is a multiple specifying CIC and LATA. CIC is entered followed by a space and the LATA entry, (for example: 9999 999).
		0 to 9999	CIC. This data entry specifies the Carrier Identification Code. The originating trunk receives the CICs. Valid entries are CARRNUMs defined in table OCCINFO. ***Note:*** CICs entered with a leading zero are synonymous with the same CIC without the leading zero and will not have that zero printed out. For example: CIC 0333 is identical to CIC 333 and will be printed out as 333.
		DEF, 1to 999	LATA. This data entry specifies the Local Access and transport area on the originating trunk.
NATLSTS		String range 0 to 999	NATLSTS. Serving translation scheme (STS) for a national call. Valid entries are key fields in table HNPACONT.
INTLSTS		String range 0 to 999	INTLSTS. Serving translation scheme (STS) for an international call. Valid entries are key fields in table HNPACONT.
OPTIONS		NIL	Enter NIL to specify no option selected. Enter $ to end tuple.
		TNSDELV	TNS DELIVERY. Datafill option CKTCODE to provision the circuit ID which is sent out with the TNS.
		CKTCODE	

TR533CIC field descriptions (Sheet 2 of 2)

Field	Subfield or refinement	Entry	Explanation and action
	CKTCODE	UNSPEC,INTL_ NO_OP, INTL_OP, SPARE3, SPARE4, SPARE5, SPARE6, SPARE7, RESNTET8, RESNTET9, RESNTET10, RESNTET11, RESNTET12, RESNTET13, RESNTET14, RESNTET15	CKTCODE. CKTCODE is the circuit code that will be delivered with the TNS. Enter the value CKTCODE.
		RESERVE	Option added for future development.
	CAINGRP	CAIN_GROUP_ TYPE	CAINGRP. Valid entries are key fields in table CAINGRP.

TR533CIC (end)

Datafill example

The following example shows datafill for table TR533CIC.

```
    KEY   NATLSTS  INTLSTS                    OPTIONS
 ---------------------------------------------------------------------
 888     5     611     611   (CAINGRP SPECDIG_STD)   $
4123     4     611     611                           $
 333     5     611     611                           $
```

Table history

UCS15

The range of option field OPTIONS is increased by adding CAINGRP (A60009555).

UCS14

The range of option field CKTCODE is increased by adding SPARE3, SPARE4, SPARE5, SPARE6, SPARE7, RESNET8, RESNET9, RESNET10, RESNET11, RESNET12, RESNET13, RESNET14, and RESNET15 (A60008450).

UCS13

Range is increased for two-part key (CIC, LATA). CIC increased to 0-9999, LATA changed from 0-999 to DEF, 1-999. Two new options, TNSDELV and RESERVE, are added. TNSDELV includes option field CKTCODE. Only table control is changed by this feature; call processing changes will not occur until after UCS13. RESERVE is added for future implementation (A6008210).

UCS12

Table TR533CIC was created (A6006696).

TRK4CIC

Table name

Trunk 4-digit Carrier Identification Code (TRK4CIC) table

Functional description

Table TRK4CIC specifies the CIC protocol on a trunk group basis, provides a CIC to be outpulsed on outgoing calls, and specifies a carrier number as an index into table OPERRTE or table OPERRTE2.

The CN field of table TRKGRP1 is not referenced or accessed for the following trunks:

- PTS FGD
- SS7 FGD
- SS7 IMT

Attempting to change FGD or SS7 IMT trunks in table TRKGRP1 results in a warning message and the change is not allowed.

Only AXXESS FGD (PTS and ISUP) trunks can be datafilled in table TRK4CIC. If operating company personnel attempt to enter datafill for any other trunk types, the switch generates the following error message:

```
ERROR: ONLY AXXESS TRUNK TYPES ARE VALID AS A KEY. CHECK
TABLES TRKGRP AND TRKSGRP.
```

When the transition to four-digit CICs is complete and the office parameter CIC4_TRANS_COMP is datafilled Y, only tuples with a CICSIZE of 4DIGS are allowed in table TRK4CIC.

Datafill sequence and implications

Table TRK4CIC is not required in UCS09. The UCS DMS250 switch operators are not allowed to provision any data in the table TRK4CIC. However, in order to support ONP transfers, the table continues to exist. The CIC data in the table TRK4CIC has moved to table TRKFEAT and TRKSIG. New options have been added to tables TRKFEAT and TRKSIG to replace data provided by table TRK4CIC prior to UCS09.

Any attempt to provision a tuple in table TRK4CIC that changes the modified TRKFEAT or TRKSIG tuple generates a FLEX309 log. Also, any attempt to modify the CIC digits or CICSIZE option generates the following error message:

TRK4CIC (continued)

"Table TRK4CIC is no longer used. The CIC data in table TRK4CIC and TRKGRP1 is moved to tables TRKFEAT and TRKSIG for AXXESS trunks and TRKGRP for non-AXXESS trunks."

Field descriptions

The following table describes field names, subfield names, and valid data ranges for table TRK4CIC.

Field	Subfield or refinement	Entry	Explanation and action
CLLIKEY		CLLI datafilled in table CLLI	CLLI KEY. This field contains TRKGRP CLLI names for trunks requiring incoming and outgoing CIC processing. Datafill only AXXESS FGD trunk types.
CICSIZE		3DIGS or 4DIGS	CARRIER IDENTIFICATION CODE SIZE. For incoming protocols, datafilling 3DIGS means that the incoming trunk only supports three-digit CICs. Datafilling 4DIGS indicates that the incoming trunk only supports four-digit CICs. The default is 3DIGS. For outgoing protocols, datafilling 3DIGS means that the three-digit CIC datafilled is to be outpulsed if available. If a three-digit CIC is not datafilled, then the incoming CIC is outpulsed. If an incoming three-digit CIC is not available, then office parameter CARRIER_ID_CODE_FGD is outpulsed. Datafill of 4DIGS means that the four-digit CIC is not datafilled, then the incoming CIC is outpulsed. If an incoming four-digit CIC is not available, then office parameter CIC_4DIGS is outpulsed.
CN		0 to 9999	CARRIER NUMBER. This is the key to table OPERRTE/OPERRTE2. Default is 0.
CICOPTIONS		see subfield	CIC OPTIONS. This is an option field that specifies that a CIC is to be outpulsed. This field contains a subfield: TRK4CICOPT.
	TRK4CICOPT	OUTCIC	OUTCIC selection specifies a CIC to be outpulsed. See TRK4CICOPT=OUTCIC section for refinement datafill.

TRK4CICOPT=OUTCIC

When TRK4CICOPT=OUTCIC, datafill the following refinement:

Refinement	Subfield or refinement	Entry	Explanation and action
CICDIGS		Up to 4 digits (0-9)	CIC DIGITS. Enter the CICDIGS that need to be outpulsed. Default is 0.

Datafill example

The following example shows sample datafill for table TRK4CIC.

```
CLLIKEY          CICSIZE     CN        CICOPTIONS
_____________________________________________________
EAN671TWMFWK     3DIGS       0856      (OUTCIC 444)
EAN670TWMFWK     4DIGS       0000      (OUTCIC 4444)
```

Table history

UCS09

Table TRK4CIC was updated to deny datafill and generate an error message (AX1002).

UCS08

Table TRK4CIC was updated to deny datafill for trunk types other than AXXESS FGD trunks.

TRKCOS

Table name

Trunk Class of Service (TRKCOS) table

Functional description

Before a call can complete to a terminating trunk, class of service (COS) screening is performed. The COS of the originating trunk (field COS in TRKGRP) combined with the COS of the terminating trunk (also field COS in TRKGRP) are used to index into table TRKCOS. The field ALLOW in table TRKCOS is set to Y or N. If the field is Y, the call passes COS screening. If it is N, it fails and the call route advances to the next route choice in the route list.

Up to 120 COS screening indexes can be defined (0 to 119).

This is illustrated in the datafill examples below.

```
TRUNK CLLI          TRKGRP COS FIELD VALUE
___________         ______________________
TRUNK1                   0
TRUNK2                   1
TRUNK3                   0
TRUNK4                   1


TABLE TRKCOS Datafill

KEY                      ALLOW
INC       TERM
-----------------------------
  0       0              Y
  0       1              N
  1       1              Y
  1       0              N
```

With this datafill a call originating on TRUNK1 can terminate to TRUNK3, but not to TRUNK2 or TRUNK4. A call originating on TRUNK2 can terminate on TRUNK4, but not on TRUNK1 or TRUNK3.

Table size

Table TRKCOS contains up to 14400 tuples.

Memory requirements

Each tuple in table TRKCOS consists of a one-bit boolean field.

Field descriptions

The following table describes field names, subfield names, and valid data ranges for table TRKCOS.

Field	Subfield or refinement	Entry	Explanation and action
KEY			KEY. This field consists of a 2-part key: INC and TERM.
	INC	0 to 119	INCOMING. This is the number of the incoming trunk.
	TERM	0 to 119	TERMINATING. This is the number of the terminating trunk.
ALLOW		Y or N	ALLOW. If the field is Y, the call passes COS screening. If N, it fails and the call route advances to the next route choice in the route list.

Datafill example

The following example shows datafill for table TRKCOS.

```
      KEY                ALLOW
_____________________________
  61      119            Y
```

TRKFEAT

Table name

FlexDial Trunk Group Features (TRKFEAT) table

Functional Description

See *UCS DMS-250 FlexDial Framework Application Guide* for table TRKFEAT datafill information.

TRKGRP

Table name

Trunk Group (TRKGRP) table

Functional description

> **ATTENTION**
> To datafill table TRKGRP for the FlexDial framework feature (AXXESS trunk group type), refer to *UCS DMS-250 FlexDial Framework Application Guide.*

Table TRKGRP contains customer-defined data associated with each trunk group that exists in the switch. Entries in this table consist of the following information:

- a unique common language location identifier (CLLI) associated with each trunk group entry (field GRPKEY)
- the group type of the trunk group (field GRPTYP)
- the traffic separation number associated with the trunk group (field TRAFSNO)
- the pad group assigned to the trunk group (field PADGRP)
- the operational measurements (OM) no-circuit class associated with the trunk group (field NCCLS)
- additional refinements dependent on the group type (field GRPINFO)

> **ATTENTION**
> When changing data in a trunk group, the trunks must be placed in the Installation Busy (INB) state (for most changes).

Field GRPKEY

Field GRPKEY contains the CLLI associated with the trunk group and previously datafilled in table CLLI.

Field GRPTYP

The following table lists the trunk group types available to datafill in table TRKGRP. However, the switch typically will not support all the trunk group types listed. The set of trunk group types available for use in a specific office is a function of the hardware and software features and feature packages installed in that office. Some trunk group types available in an office have

fields that are subject to the presence of a feature. Before attempting to datafill table TRKGRP (or any other data schema table) a trunking diagram or equivalent, reflecting the hardware and software features and feature packages ordered for the office, must be at hand.

Note: For detailed information specific to a particular trunk group type supported by the switch (except for the AXXESS trunk group type), refer to the TRKGRP documentation section that deals with that trunk group type. For AXXESS trunk groups, refer to the *UCS DMS-250 FlexDial Framework Application Guide*.

Field Name	Description
ANIINTL	ANI International. This option has three subfields RECEIVE, CAINMSG, and CPNLBLK to support different functionality for processing the CPN for calls originating on SS7 FGD trunks. When the ANIINTL.RECEIVE option in set to 'Y', the CPN will not undergo ANI screening or be processed as an ANI for billing purposes and the CPN will not be populated in the ANISP (ANI Spill) field of the CDR273 record. This also ensures that the call will not go to ADBF (ANI Database Failture) treatment.
ATR	Automatic Trunk Routing. In a UCS DMS-250 switch office, the Automatic Trunk Routing (ATR) maintenance trunk is the digital interface between the UCS DMS-250 switch and an external ATR system. The ATR trunk can terminate to the following UCS DMS-250 trunk agencies: DAL, EANT, IMT, ONAL, ONAT.
AXXESS	FlexDial framework AXXESS trunk type. Refer to *UCS DMS-250 FlexDial Framework Application Guide* for AXXESS trunk information and datafill.
C101	101 Communication Test Line.
CPNLBLK	Calling Party Numbers Line Block. The CPNLBLK option for ISUP IMT trunks will be supported in table TRKGRP. When the CPNLBLK is present for the SS7 IMT terminator, the CPN is not included OPTIONAL PART of the outgoing IAM message.
DAL	Dedicated Access Line. In a UCS DMS-250 office, a DAL allows a dedicated connection between a UCS DMS-250 switch and a PBX, key system, or single telephone. The UCS DMS-250 switch supports originating, terminating, and two-way access over loop start, ground start, and tie-trunk arrangements.

TRKGRP (continued)

Field Name	Description
DS0	Digital Signal Level 0. In a DMS service switching point (SSP) office, trunk group type DS0 has the capability of Common Channel Signaling 7 (CCS7) link access to a signal transfer point (STP) node. The DS0 link is a single channel 64 kbits/s link.
E911	Enhanced 911 Emergency Service. In a DMS E911 tandem office, incoming trunk group type E911, together with tables E911PSAP and E911ESN, provide selective routing to the applicable public safety answering point (PSAP) using the emergency service number 9ESN corresponding to the emergency service zone (EZN) of the originator of the 911 call.
EANT	Equal Access Network (also called FGD). In a UCS DMS-250 office, Equal Access Network Trunks (EANT) allow connection of the UCS DMS-250 switch to the trunk side of a Bell Equal Access End Office (EAEO) or a Class 4/5 Access Tandem (AT) office. The EAEO arrangement allows the UCS DMS-250 switch access only to those phones directly connected to offices that are directly connected to the AT office.
EDAL	EDAL trunk group type defines information for the operating company to connect subscriber locations to the UCS DMS-250 switch. The configuration simulates electronic tandem network (ETN) switching and ETN-like networking to subscribers.
FWDXMT	Forward Transmit. Enter FWDXMT to control the voice path setup of trunk agencies. The DXMT option can be datafiled with one of three values: STD, IMM, ANS for SS7 FGD, SS7 IMT. For PTS FGD, the FWDXMT option can be datafiled with one of two values: STD and ANS. For 4-wire DAL-TIE, the FWDXMT option can be added without the option values.
IMT	Intermachine Trunk. IMT trunk group type assigns the intermachine trunk groups connecting the UCS DMS-250 switch to other DMS-250 switches in the network. The UCS DMS-250 switch supports originating, terminating, and 2-way access over IMTs.
IMTFGD	Enter IMTFGD to identify IFD trunk agencies. This option can be datafilled on SS7 FGD trunk agencies.
ISUPIDX	ISUPIDX enumerated range is expanded to include RSVD.

TRKGRP (continued)

Field Name	Description
IT	Toll connecting. In a DMS toll or end office, two-way, incoming, or outgoing trunk group type IT interfaces with a toll or end office to carry toll connecting traffic including toll access, toll completing, and toll tandem. Overlap outpulsing is possible on incoming or two-way dial (DP) trunk groups provided field OVLP in table TRKSGRP is set to Y. In offices without the ROTL software package (without trunk group type T105), the 105 test line can be datafilled as trunk group type IT.
IT250	The Intertoll 250 (IT250) trunk group is used to connect the Traffic Operator Position (TOPS) facility and the switch.
LOOPA	Looparound test. In a DMS-250 switch office, trunk group type LOOPA is used for the looparound test.
MAINT	Maintenance. In a DMS-250 switch office, trunk group type MAINT is used for the following maintenance support items and tests: • dialable cable locator tone • digital test unit • emergency stand-alone • position head set • position jack • line test unit • LTU monitor and talk • metallic test unit • 108 test line • trunk test transmission • terminating transmission test
NODELAY	No Delay. The NODELAY option only supports incoming and two-way PX trunks with IPULSTYP of DT and ISTARTSG of WK. When the NODELAY option is present on an incoming or two-way PX trunk, the 4-second post dial delay will not be present for 1+10 digit calls using the AMBI TIM selector. When the NODELAY option is not present on an incoming or two-way PX trunk, the 4-second post dial delay will be present for 1+10 digit calls using the AMBI TIM selector.

TRKGRP (continued)

Field Name	Description
NU	Nailed Up Connection. In a toll, end, or international gateway office, a trunk of incoming trunk group type NU can be permanently connected (nailed-up) to a trunk of outgoing trunk group type NU. Table NLUPCLLI lists each nailed up connection that consists of an incoming trunk group type NU and an outgoing trunk group type NU.
ONAL	Off-net Access Line. In FGA, an off-net access line allows connection between a UCS DMS-250 switch and the line side of a Class 5 central office.
ONAT	Off-net Access Trunk (also called FGB and FGC). In a UCS DMS-250 office, off-net access trunks (ONAT) allow connection of the UCS DMS-250 switch to the trunk side of a Bell Class 5 end office or a Class 4/5 local tandem office.
PRA250	Primary Rate Access (also called Primary Rate Interface and PRI). Trunk group type PRA is used by the ISDN Primary Rate Access feature. This trunk group supports CAIN processing.
R2	Mexican R2 trunks. R2's are used on some international calls.
RESETBLK	Reset Dial Block. When this new option is assigned, reset dialing will not be allowed for calls on that trunk.
SOCKT	Short or Open Circuit Test Line (OCKT) or SCKT. In a DMS-250 switch office, trunk group type SOCKT is used for transmission tests.
T101	101 Communication Test Line. In a DMS-150 switch office, incoming and outgoing trunk group type T101 is used for the 101 test.
T2	Two-way End Office. In a DMS-250 switch office, incoming, outgoing, or 2-way group type TI, TO, or T2 interfaces with an end or toll office for local, direct, or tandem switching.
T250	Transmission. In a UCS DMS-250 switch office, T250 trunk group type is used for transmission tests.
TI	Incoming End Office. Refer to T2 description.
TL	CCIS Transmission Link. In a DMS-250 switch office capable of Common Channel Interoffice Signaling (CCIS), 2-way trunk group type TL interfaces with another office capable of CCIS to transmit and receive signals between the two offices. Call processing functions are not supported.

Field Name	Description
TO	Outgoing End Office. Refer to T2 description.
TOPS	Traffic Operator Position System. In a UCS DMS-250 switch toll office, 2-way trunk group type TOPS can be set up for the following outgoing trunk functions (in addition to the incoming trunk functions): • dedicated to toll completing • dedicated to verification • combined toll completing and verification
TTL2	Terminating 102 Test Line. In a DMS-250 switch office, trunk group type TTL2 is used for the carrier milliwatt supply and balance termination test.

Field TRAFSNO

If the switch has the Traffic Separation Peg Count feature package, the range of values for the incoming and outgoing traffic separation numbers are dependent upon the value of office parameters TFAN_IN_MAX_NUMBER and TFAN_OUT_MAX_NUMBER in table OFCENG.

For switches without the Traffic Separation Peg Count feature package, the range of values for the traffic separation numbers is 0 to 15.

Incoming and outgoing traffic separation numbers 1 to 9 are reserved for generic traffic separation numbers. See table TFANINT for the assignment of incoming to outgoing traffic separation numbers.

With the traffic separation feature, a peg count of all calls, by type of call, direct dial (DD), operator assisted (OA), or no prefix (NP), can be accumulated between an originating source (incoming trunk or an originating line attribute) and a terminating destination (outgoing trunk, terminating line attribute, tone or announcement).

Field PADGRP

Field PADGRP contains the name of the pad group in table PADDATA that lists the value of the pad circuits that can be switched into the network when one of the members of the group is involved in a call.

Different values for the pad circuits can be specified when the circuit connects to an agent with a different pad group.

TRKGRP (continued)

Network pad switching is only applicable when a new circuit is connected to the public switching network.

Field NCCLS

Table TRKGRP field NCCLS specifies the operational measurement (OM) register that is incremented when treatment GNCT occurs. Refer to the *UCS DMS-250 Operational Measurements Reference Manual* for information on UCS DMS-250 switch OMs.

Treatment GNCT occurs when a trunk group is the last route in a route list and an all-trunks-busy condition is encountered on this list.

OM react to treatment GNCT by incrementing register OFZ2 to record the number of times the GNCT treatment is invoked and by incrementing one of the registers listed below to indicate which type of facility was unavailable, as defined by the entry in table TRKGRP field NCCLS.

If a trunk group is incoming, no-circuit class is not required. Enter NCRT to satisfy the table editor.

For outgoing or the outgoing side of a two-way trunk group, the operating company can assign any of the no-circuit classes listed in the following table.

Field NCCLS entry	Register name	Register description
NCBN	OFZNCBN	No-circuit business network
NCID	OFZNCID	No-circuit inward dial (2W DID/DOD trunks)
NCIM	OFZNCIM	No-circuit intermachine
NCIT	OFZNCIT	No-circuit intertoll
NCLT	OFZNCLT	No-circuit local tandem
NCOF	OFZNCOF	No-circuit off-net trunk (ONAL, ONAT)
NCON	OFZNCON	No-circuit on-net trunk (DAL)
NCOT	OFZNCOT	No-circuit other trunk (test lines, test desk, or maintenance trunks)
NCRT	OFZNCRT	No-circuit

Field NCCLS entry	Register name	Register description
NCTC	OFZNCTC	No-circuit toll completing
NOSC	OFZNOSC	No-service circuit

Field INTERFACE

Field INTERFACE contains the name of the type of interface the trunk is going to use. The acceptable choices for it are TOPS, PBX, PSTN, and OTHERS.

GRPINFO and refinements

Field GRPINFO contains refinement data specific to the trunk group type identified in field GRPTYP. Refinements SELSEQ (select sequence) and TRAFCLS (traffic class) are common to most trunk groups.

Refinement SELSEQ - Trunk selection algorithms

The trunk selection algorithms for two-way trunk groups in a UCS DMS-250 switch office are as follows:

- most idle/least idle (MIDL/LIDL)
- ascending sequential/descending sequential (ASEQ/DSEQ)
- clockwise circular trunk hunt/counterclockwise circular trunk hunt (CWCTH/CCWCTH)

A summary of the limitations and relative merits of the various trunk selection schemes follows.

MIDL/LIDL SELSEQ

The MIDL/LIDL process is based on the length of time a trunk member is idle. One switch selects from a trunk group the trunk that is idle for the longest period of time. The opposite end switch selects from a trunk group the trunk that is idle for the shortest period of time. The selection order of trunks is not fixed.

Note: In two way trunks, only outgoing calls change trunks from the idle state. So after an incoming call releases, the trunk it used is not considered the least idle.

MIDL/LIDL and killer trunks

In a LIDL office, some types of killer trunks move to the head of the list. When one does, it becomes the least idle trunk and is repeatedly seized. All calls routed to this killer trunk fail to complete.

TRKGRP (continued)

MIDL/LIDL and glare

MIDL/LIDL minimizes glare by preventing the possibility of simultaneous seizure prior to the seizure of the last idle trunk in the trunk group.

ASEQ/DSEQ SELSEQ

Sequential trunk selection minimizes the occurrence of glare and reduces reseizure of killer trunks encountered with the MIDL/LIDL trunk selection method when used for two-way trunks. In sequential trunk selection, the trunk selection order and selection starting point are fixed. The beginning of the list for one killer is the end of the list for the opposite end switch. This list is searched sequentially by each switch, starting from the beginning of the list, for the first idle trunk. One switch selects the first idle trunk, searching the list in ascending order. The opposite end switch selects the first idle trunk, searching the list in descending order.

CAUTION

ASEQ/DSEQ selection sequence limitations

Limit ASEQ/DSEQ selection sequences to DMS offices with NT40 processors and a maximum of 175 members or DMS SuperNode offices with a maximum of 512 members. Exceeding these recommended limits may significantly increase call completion time.

ASEQ/DSEQ and killer trunks

The position of a killer trunk in the sequential list determines its impact on trunk selection. A killer trunk in the middle of the list has minimal impact but one near either end has significant impact. This is due to all searches starting at one end or the other of the trunk member list. If the traffic is such that an idle trunk is found near the end of the list for most searches, then a killer trunk will be seized more often than a killer trunk in the middle of the list.

ASEQ/DSEQ and glare

ASEQ/DSEQ minimizes glare by preventing simultaneous seizure prior to the seizure of the last idle trunk in the trunk group.

CWCTH/CCWCTH SELSEQ

Like ASEQ/DSEQ, the circular trunk selection strategy is based on a fixed ordered list of trunks. The two switches search the list in opposite directions, similar to the ASEQ/DSEQ method. The trunk selected is the first idle trunk found in a search starting after the most recently released (MRR) trunk in the trunk group.

For an analogy, use a clock to denote the list of trunks with the hours representing the trunks, as shown in Figure Figure , "Circular trunk group selection" on page -10. In a two-way trunk group, one switch searches the list of trunks clockwise from a common reference point. The other switch searches the list of trunks counterclockwise from the same reference point as the first switch. The common reference point is the MRR trunk in the group. The reference point is updated each time a trunk is released.

Circular trunk group selection

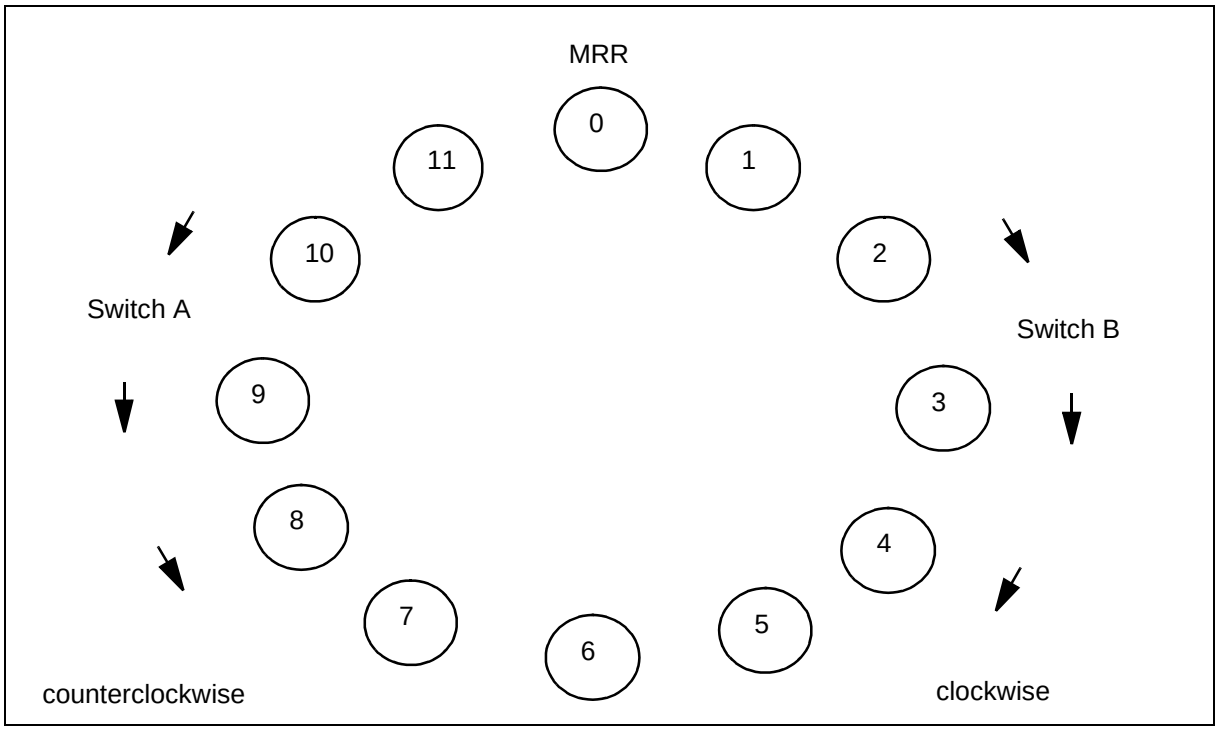

CWCTH/CCWCTH and killer trunks

Circular trunk hunting (CTH) substantially reduces the impact of killer trunks. Repeatedly seized killer trunks are not reseized as often under the CTH selection method as with the MIDL/LIDL and ASEQ/DSEQ selection methods, in two-way trunk groups. In the CTH selection method, the selection starting point changes each time a trunk is released (the MRR trunk). If the MRR trunk is a killer trunk, the next trunk seized is a trunk to either side of the killer trunk. CTH has no effect on the other types of killer trunks.

CWCTH/CCWCTH, killer trunks, and operational measurements

The killer trunk feature gathers usage and peg counts for each trunk, over a specified interval of time, to detect killer trunks. The count is updated upon seizure of a trunk, when the trunk changes from a not-call-processing-busy

TRKGRP (continued)

state to a call-processing-busy state. CTH reduces the number of times a killer trunk is seized. Therefore, CTH lowers the threshold used in determining whether a trunk has killer trunk characteristics.

CWCTH/CCWCTH and glare

Glare occurs when one or two idle trunks are left in the trunk group. CTH does not affect the occurrence of glare. Glare occurrence during CTH is the same as glare occurrence during the two other trunk selection methods.

Choosing a trunk selection method and sequence

Field SELSEQ defines the trunk selection method and sequence for the two-way trunk group. The trunk selection method for a two-way trunk group in a UCS DMS-250 office must be compatible with the switching office equipment at the far end of the trunk group. This requirement is outlined below.

If the trunk group is two-way and the far end is a link list switcher, enter one of the following select sequences:

- LIDL — Enter LIDL (least idle) if far end is a link list switcher with MIDL (most idle) select sequence.
- MIDL — Enter MIDL (most idle) if far end is a link list switcher with LIDL (least idle) select sequence.

Far end not link list switcher - sequential selection required

If sequential selection (Enhanced Sequential Trunk Hunting feature package) is present, the trunk group is two-way, the far end is not a link list switcher, and sequential selection is required, enter one of the following selection sequences:

- ASEQ — Enter ASEQ for ascending sequential selection based on the order of trunk members in table TRKMEM, if the far end is DSEQ (descending sequential selection).
- DSEQ — Enter DSEQ for descending sequential selection based on the order of trunk members in table TRKMEM, if the far end is ASEQ (ascending sequential selection).
- CWCTH — Enter CWCTH for clockwise circular trunk hunting from the most recently released (MRR) trunk in the trunk group, based on the order of trunk members in table TRKMEM, if the far end is CCWCTH (counterclockwise circular trunk hunting).
- CCWCTH — Enter CCWCTH for counterclockwise circular trunk hunting from the MRR trunk in the trunk group, based on the order of trunk members in table TRKMEM, if the far end is CWCTH (clockwise circular trunk hunting).

Far end not link list, sequential selection not required

If the trunk group is two-way, the far end is not a link list switcher, and sequential selection does not apply, enter MIDL (to satisfy the table editor).

Changing trunk selection method and sequence

A trunk group trunk selection method cannot be changed. If such a change is required, create a new trunk group that has the required trunk selection method, then delete the individual trunks from the old trunk group and add them to the new trunk group.

For an existing trunk group, the selection sequence can be changed to ASEQ from DSEQ or from DSEQ to ASEQ if all the members are installation busy (INB) or unequipped.

Refinement TRAFCLS

Data entered by the operating company in field TRAFCLS (traffic class) is not used by UCS DMS-250 switch software. This field is provided for the convenience of operating companies who wish to associate their own traffic class code with each trunk group. Table “Examples of traffic class codes,” shows some sample traffic class codes.

Examples of traffic class codes

Traffic class	Usage	
AL	Alarm	
AN	Announcement	
BL		BL
CA	CAMA	
CB	Coin box	
CD	Customer dial instruction	
CP	CAMA office to CAMA operator desk	
CS	Coin supervision	
DA	Directory assistance	
DB	ONAL dedicated business line trunk group	

TRKGRP (continued)

Examples of traffic class codes

Traffic class	Usage	
DD	DDD access	
DL	DAL outgoing or 2-way trunk group	
DS	Dial tone speed	
IA	Intraoffice	
ID	DAL incoming trunk group	
IE	Interoffice	
IM	IMT trunk group	
IN	Information	
INTERCEPT		Intercept
IR	Intercept	
IT	Intertoll	
LINE		Line
LW	Leave word	
MA	Manual assistance	
MB	Mobile radio	
MI	Miscellaneous	
MN	Manual	
MT	Intertandem	
NIL		Default value
NT	No test	
OA	Operator assistance	
OF	Official	
ON	ONAL trunk group	

Examples of traffic class codes

Traffic class	Usage	
OT	ONAT or EANT trunk group	
OW	Order wire	
PS	Permanent signal	
RC	Recording completing	
REPAIR		Repair
RR	Rate and route	
RS	Repair service	
SC	Service code	
SO	Service observing	
TA	Toll station	
TC	Toll completing	
TE	End office toll	
TG	Tandem completing	
TI	Time	
TK	Test disk	
TM	Toll completing and toll switching combined	
TO	Tandem originating	
TS	Toll switching	
TT	Toll tandem	
TW	TWX switching plan	
VC	Vacant code	
VR	Verification	

TRKGRP (continued)

Examples of traffic class codes

Traffic class	Usage	
WE	Weather	
XX		XX

Datafill sequence and implications

Datafill table CLLI before table TRKGRP.

Optionally datafill the following tables before table TRKGRP, depending on the group type.

- ANNMEMS
- BCDEF
- DEFDATA
- LCASCRCN
- COSUS
- PADDATA
- POSNAME
- PXHEAD
- SNPANAME
- STDPRTCT
- TSTLCONT

Table size

Field SIZE in table DATASIZE specifies the total number of trunk groups that can be datafilled in table TRKGRP. The table length can be extended by changing the value of this field and performing a cold restart. The maximum number of trunk groups that can be datafilled is 8191.

ASEQ/DSEQ selection sequences should be limited to the following trunk group sizes:

- In DMS offices with NT40 processors, a maximum of 175 members.
- In DMS SuperNode offices, a maximum of 512 members.

Exceeding these recommended limits may significantly increase call completion time.

Memory allocation

Tuples are allocated in blocks of 32, with each tuple consuming 100 bytes:(32*100 = 3200 bytes)

Each time a new group is added, an additional 64 bytes is allocated.

The following is an example calculation for 32 tuples:(32 * 100) + (32 * 64)

Note: If the NORESTARTSWACT utility is available on your switch, you can activate data changes without interrupting service. Refer to the *NORESTARTSWACT User Guide*.

Datafill examples

The following is an example of an EANT trunk type using the ANIINTL option with subfields RECEIVE, CAINMSG, and CPNLBLK.

```
GRPKEY GRPTYP TRAFSNO PADGRP NCCLS GRPINFO
_____________________________________________________

250TEANT2WS7 EANT 0 NPDGP NCOF UCS 0 2W 250PRETT LIDL 16 7 16 16 ANI-
PRETT 4
4 619 UCS2EAEO NIL 619 7 NONE 0 NONE 0 0 3_1KHZ 160 (ANIDIGS )
(TMANIDLV ALWAYS) (CICSIZE 4DIGS) (ANIINTL N N Y) $
```

The following is an example of a IMT trunk using the CPNLBLK option.

```
GRPKEY GRPTYP TRAFSNO PADGRP NCCLS GRPINFO
_____________________________________________________

250_OG_RLT_RTPC IMT 0 NPDGP NCIT UCS 0 OG NPRT MIDL 16 16 16 16 UCS2UCS
NIL
C N NONE 4 ALWAYS ADDR 1 1 INTER N SPEECH NONE 4 160 619 0 (RLT V1 N)
(TMCICBLK BLK_TNS) (CICSIZE 4DIGS) (CPNLBLK ) $
```

The following is an example of a PX trunk using the NODELAY option.

TRKGRP (continued)

```
GRPKEY GRPINFO
_____________________________________________________________

RCC20PX PX 0 ELO NCRT IC NIL MIDL N POT1 NSCR 619 619 LCL NONE NONE NLCA N N 32 NIL 5400002
DIALTN N N N (NODELAY) $
RCC0PX PX 0 ELO NCRT 2W NIL MIDL N POT1 NSCR 619 619 LCL NONE NONE NLCA N N  32 NIL 5400002
DIALTN N N N (NODELAY) $
```

The following is an example of a PX trunk using the ISUPIDX option.

```
GRPKEY GRPTYP TRAFSNO PADGRP NCCLS GRPINFO
----------------------------------------
C7EANTTRK EANT 50 NPDGP NCOF 0 2W EAN MIDL 16 7 16 16 EAPT 4 4 214
RSVD NIL 214 650 MANUAL 0 RTE622 0 1 VOICE_DATA 160 $
```

The following example shows TRKGRP tuple with the RESETBLK option.

```
GRPKEY GRPTYP TRAFSNO PADGRP NCCLS GRPINFO
_____________________________________________________

DAL228TWDTLS DAL 127 NPDGP NCON 0 2W DAL MIDL 16 7 16 16 S 10 NIL DL 0 5
111
MANUAL 214 0 6112211 NONE 0 VOICE_DATA Y 1 N Y NONE 00 160 (MCCS )
(OHQTERM ) (CAIN ) (RESETBLK) $
```

Datafill warnings

If an attempt is made to datafill the option on an outgoing PX trunk, the following error message is displayed:

NODELAY option allowed on IC or 2W trunks only.

Table history

UCS18

Added option IMTFGD (A19012090) and option FWDXMT (A19012099) in table TRKGRP.

UCS17

Added option NODELAY to PX trunk options field in table TRKGRP. Also, added a new error message to support option NODELAY (A59033603).

Expanded the ISUPIDX enumerated range to include a value of RSVD (A59033997).

Introduced option Reset Dial Block (RESETBLK) in table TRKGRP. This option provides additional control of the reset dialing feature on a turnk group basis (A59036532).

Table TRKGRP is modified to add option ANIINTL to the OPTIONS vector field for ISUP EANT trunk types. Also, added the CPNLBLK option for IMT trunk types (A59038177).

UCS13

Corrected unresolved cross-reference.

UCS07

Added R2 to field GRPTYP.

Created field INTERFACE.

UCS06

Added AXXESS trunk group for FlexDial.

Added CDRTMPLT option to allow use of customer-defined templates for the formatting of CDR records.

Added VPROMPTS option for Mechanized Voice Prompt enhancements for EANT, ONAT, and SS7 IMT trunks.

Added OPCHOICE option for operator call routing enhancements for DAL, FGA, FGB, FGC, PTS FGD, SS7 FGD and SS7 IMT trunks.

Added options for global ISUP IMT trunks.

TRKGRP1

Table name

Trunk Group 1 (TRKGRP1) table

Functional description

Table TRKGRP1 provides flexible dialing plan characteristics. It is an extension of table TRKGRP (Trunk Group).

The key to table TRKGRP1, CLLI, contains tuples of dedicated access line (DAL), off-net access lines (ONAL), incoming or two-way off-net access trunks (ONAT), inter-machine (IMT), and Equal Access Network (EANT) trunk group types. It is automatically datafilled with default values when a trunk group is added to table TRKGRP. A tuple is not added or deleted within this table. Only the CHANGE editor command is allowed.

The dialing plan enhancements for the related trunk group type provide a choice of:

- Prompt tone prior to dialing the account code and FGD cut-through dialing.
- Dialing authcode or address digits first.
- Sending prompt tone before the subscriber dials the account code.
- Number of authcodes.
- Using multi-stage outpulsing for FGD.

Table size

The base definition for table TRKGRP1 tuple is 14 words. The maximum size of the table is 8192 tuples.

TRKGRP1 (continued)

Field descriptions

The following table describes field names, subfield names, and valid data ranges for table TRKGRP1.

Field	Subfield or refinement	Entry	Explanation and action
CLLI		Valid CLLI datafilled in table CLLI	COMMON LANGUAGE LOCATION IDENTIFIER. Enter the CLLI names used to identify the trunk group types.
GRPTYP		DAL, EANT, IMT, ONAL, ONAT, PRA250	GROUP TYPE. Enter the trunk group type.
DATA		GRPTYP	DATA. Datafill for this field depends on the value in field GRPTYP. Refer to the appropriate section for refinement datafill.

GRPTYP=DAL

The following table describes valid refinement data ranges when GRPTYP=DAL.

GRPTYP=DAL refinement descriptions (Sheet 1 of 2)

Refinement	Subfield or refinement	Entry	Explanation and action
IDPRTRAN		Valid pretranslator datafilled in table STDPRTCT	INFORMATION DIGIT PRETRANSLATOR NAME. Enter the information digit pretranslator name.
PANICLAS		NOLOOK or LOOKUP	PSEUDO ANI CALL PROCESSING. Enter NOLOOK for no Automatic Rating Required or LOOKUP, which would invoke a look-up for the ANI in table SPLDNID and FXDNMAP. If the ANI is found, then Automatic Rating is required and the HOBIC devices is assigned in table SPLDNID. The default value is NOLOOK.

GRPTYP=DAL refinement descriptions (Sheet 2 of 2)

Refinement	Subfield or refinement	Entry	Explanation and action
PINADDRP		Y or N	PIN ADDRESS DIGITS PROMPT TONE. This field is added for GRPTYP of IMT to apply PIN_ADDR_PROMPT while collecting subscriber dialed digits. Enter Y to send prompt tone before the address digits are dialed. Enter N if no prompt tone is sent before the address digits. Default value is N.
SPARE1		Y or N	SPARE1. For future development. The default value is Y.
SPARE2		Y or N	SPARE2. Set to Y to allow a 5- to 7-digit authcode to be followed by an optional account code, then by the address digits. Set to N to cause the trunk group to use the standard dial plan appropriate to its group type. *Note:* Ensure that field AUTHFRST is set to Y before *changing* SPARE2 to Y.
SPARE3		0 to 7	SPARE3. This field is used to turn on or off fast features for a specific trunk group. The result is site-specific based on implemented fast features. The default value is 0.
SNXX		000 to 999, NIL	SERVING NXX. This field specifies the serving NXX. The default value is NIL.
SPARE4		0 to 7	SPARE4. This field is used to turn on or off fast features for a specific trunk group. The result is site-specific based on implemented fast features. The default value is 0.
LCDDUR		0 to 60 minutes	LONG CALL DISCONNECT DURATION. This parameter enables the unanswered call disconnect feature. Enter the number of minutes to set the unanswered call disconnect timing, from 0 to 60 minutes, in one-minute increments. This is the length of time a call is allowed to remain unanswered before a disconnect is forced. The default value of 0 deactivates unanswered call disconnect timing.

TRKGRP1 (continued)

GRPTYP=EANT

The following table describes valid refinement data ranges when GRPTYP=EANT.

GRPTYP=EANT refinement descriptions (Sheet 1 of 3)

Refinement	Subfield or refinement	Entry	Explanation and action
ACPROMPT	ACTONE	N or Y	ACCOUNT PROMPT Enter Y to datafill account code prompt tone and tone duration in field ACTONE. Enter N, the TONE_TYPE and DURATION fields are not prompted for a datafill. Default value is N.
	TONE_TYPE	STANDARD, CARRIER	TONE TYPE. Enter value for STANDARD prompt tone (350/440Hz) or CARRIER prompt tone (400Hz) when ACTONE field is Y.
	DURATION	LONG, SHORT	DURATION. Enter duration for TONE_TYPE as LONG (continuous) tone or SHORT (a one second burst of tone) when ACTONE field is Y.
AUTHFRST		Y or N	AUTHCODE FIRST. Enter Y when Authcode is dialed before address digits. Enter N when Authcode is dialed after address digits. Default value is Y. If PANIVAL option is set in table TRKGRP, set to Y.
AUTHDIAL		0 to 15	VARIABLE AUTHFIELD LENGTH. This field specifies how many digits are expected to dial for the authcode. It is set to the total number of authcode digits needed (five, six or seven) minus the number of digits in the field VAUTHFLD.
DIALTONE		S, C, or N	DIALTONE. Enter S = Standard dialtone, C = Carrier dialtone and N = NIL dialtone. The default value is C.
MLSTAGE		Y or N	MULTIPLE STAGE. Enter, Y = FGD multiple stage outpulsing is supported; ID and Information digits. Enter, N = Normal outpulsing is supported; address digits outpulsed only

GRPTYP=EANT refinement descriptions (Sheet 2 of 3)

Refinement	Subfield or refinement	Entry	Explanation and action
OSSSIG		NONE or OSS	OPERATOR SERVICES SIGNALING. Enter, NONE = Uses existing EANT originations. Enter, OSS = Uses operator services signaling. The default value is NONE.
ANICLAS		NOLOOK or LOOKUP	ANI CLASSIFICATION. This field specifies whether a look-up of the ANI is performed in tables SPLDNID and FXDNMAP to provide charge and rating information for operator services calls. This field cannot change to NOLOOK unless the ANIDIGS option in table TRKGRP is set. NOLOOK is the default for this field.
PINADDRP		Y or N	PIN ADDRESS DIGITS PROMPT TONE. This field is added for GRPTYP of IMT to apply PIN_ADDR_PROMPT while collecting subscriber dialed digits. Enter Y to send prompt tone before the address digits are dialed. Enter N if no prompt tone is sent before the address digits. Default value is N.
VAUTHFLD	VAUTHFLD	Vector of up to 15 characters 0000000 to 9999999, NOAUTHS	AUTHORIZATION CODE. This field contains the filed authorization code digits. NOAUTHS specifies that authcode digits are not filed.
SPARE1		Y or N	SPARE1. For future development. The default value is Y.
SPARE3		0 to 7	SPARE3. This field is used to turn on or off fast features for a specific trunk group. The result is site-specific based on implemented fast features. The default value is 0.
SNXX		000 to 999, NIL	SERVING NXX. This field specifies the serving NXX. The default value is NIL.

TRKGRP1 (continued)

GRPTYP=EANT refinement descriptions (Sheet 3 of 3)

Refinement	Subfield or refinement	Entry	Explanation and action
SPARE2		Y or N	SPARE2. Set to Y to allow a 5- to 7-digit authcode to be followed by an optional account code, then by the address digits. Set to N to cause the trunk group to use the standard dial plan appropriate to its group type. *Note:* Ensure that field AUTHFRST is set to Y before *changing* SPARE2 to Y.
SPARE4		0 to 7	SPARE4. This field is used to turn on or off fast features for a specific trunk group. The result is site-specific based on implemented fast features. The default value is 0.
LCDDUR		0 to 60 minutes	LONG CALL DISCONNECT DURATION. This parameter enables the unanswered call disconnect feature. Enter the number of minutes to set the unanswered call disconnect timing, from 0 to 60 minutes, in one-minute increments. This is the length of time a call is allowed to remain unanswered before a disconnect is forced. The default value of 0 deactivates unanswered call disconnect timing.

GRPTYP=IMT

The following table describes valid refinement data ranges when GRPTYP=IMT.

GRPTYP=IMT refinement descriptions (Sheet 1 of 2)

Refinement	Subfield or refinement	Entry	Explanation and action
LCDDUR		0 to 60 minutes	LONG CALL DISCONNECT DURATION. This parameter enables the unanswered call disconnect feature. Enter the number of minutes to set the unanswered call disconnect timing, from 0 to 60 minutes, in one-minute increments. This is the length of time a call is allowed to remain unanswered before a disconnect is forced. The default value of 0 deactivates unanswered call disconnect timing.
PINADDRP		Y or N	PIN ADDRESS DIGITS PROMPT TONE. This field is added for GRPTYP of IMT to apply PIN_ADDR_PROMPT while collecting subscriber dialed digits. Enter Y to send prompt tone before the address digits are dialed. Enter N if no prompt tone is sent before the address digits. Default value is N.
ACPROMPT		N or Y	ACCOUNT PROMPT TONE. Enter Y to send prompt tone before the account code is dialed. Enter N if no prompt tone is sent before the account code. Default value is N.
	TONE_TYPE	STANDARD, CARRIER	TONE TYPE. Enter value for STANDARD prompt tone (350/440Hz) or CARRIER prompt tone (400Hz) when ACTONE field is Y.
	DURATION	LONG, SHORT	DURATION. Enter duration for TONE_TYPE as LONG (continuous) tone or SHORT (a one second burst of tone) when ACTONE field is Y.
SPARE1		Y or N	SPARE1. For future development. The default value is Y.

TRKGRP1 (continued)

GRPTYP=IMT refinement descriptions (Sheet 2 of 2)

Refinement	Subfield or refinement	Entry	Explanation and action
SPARE2		Y or N	SPARE2. Set to Y to allow a 5- to 7-digit authcode to be followed by an optional account code, then by the address digits. Set to N to cause the trunk group to use the standard dial plan appropriate to its group type. *Note:* Ensure that field AUTHFRST is set to Y before *changing* SPARE2 to Y.
SPARE3		0 to 7	SPARE3. This field is used to turn on or off fast features for a specific trunk group. The result is site-specific based on implemented fast features. The default value is 0.
SPARE4		0 to 7	SPARE4. This field is used to turn on or off fast features for a specific trunk group. The result is site-specific based on implemented fast features. The default value is 0.

GRPTYP=ONAL or ONAT

The following table describes valid refinement data ranges when GRPTYP=ONAL or ONAT.

GRPTYP=ONAL or ONAT refinement descriptions (Sheet 1 of 3)

Refinement	Subfield or refinement	Entry	Explanation and action
ACPROMPT		N or Y	ACCOUNT PROMPT. If set to Y, the ACTONE field is allowed to be datafilled. If set to N, the ACTONE field will not be prompted.
	ACTONE	N or Y	ACCOUNT TONE. If set to Y, the account code prompt tone and tone duration are allowed to be datafilled. If set to N, the tone type and duration fields will not be prompted for a datafill.
	TONE_TYPE	STANDARD, CARRIER	TONE TYPE. Enter value for STANDARD prompt tone (350/440Hz) or CARRIER prompt tone (400Hz) when ACTONE field is Y.

GRPTYP=ONAL or ONAT refinement descriptions (Sheet 2 of 3)

Refinement	Subfield or refinement	Entry	Explanation and action
	DURATION	LONG, SHORT	DURATION. Enter duration for TONE_TYPE as LONG (continuous) tone or SHORT (a one second burst of tone) when ACTONE field is Y.
IDPRTRAN		Valid pretranslator datafilled in table STDPRTCT	INFORMATION DIGIT PRETRANSLATOR NAME. Enter the information digit pretranslator name.
PANICLAS		NOLOOK or LOOKUP	PSEUDO ANI CALL PROCESSING. Enter NOLOOK for no Automatic Rating Required or LOOKUP, which would invoke a look-up for the ANI in table SPLDNID and FXDNMAP. If the ANI is found, then Automatic Rating is required and the HOBIC devices is assigned in table SPLDNID. The default value is NOLOOK.
PINADDRP		Y or N	PIN ADDRESS DIGITS PROMPT TONE. This field is added for GRPTYP of IMT to apply PIN_ADDR_PROMPT while collecting subscriber dialed digits. Enter Y to send prompt tone before the address digits are dialed. Enter N if no prompt tone is sent before the address digits. Default value is N.
SPARE1		Y or N	SPARE1. For future development. The default value is Y.
SPARE2		Y or N	SPARE2. Set to Y to allow a 5- to 7-digit authcode to be followed by an optional account code, then by the address digits. Set to N to cause the trunk group to use the standard dial plan appropriate to its group type. *Note:* Ensure that field AUTHFRST is set to Y before *changing* SPARE2 to Y.
SPARE3		0 to 7	SPARE3. This field is used to turn on or off fast features for a specific trunk group. The result is site-specific based on implemented fast features. The default value is 0.
SNXX		000 to 999, NIL	SERVING NXX. This field specifies the serving NXX. The default value is NIL.

TRKGRP1 (continued)

GRPTYP=ONAL or ONAT refinement descriptions (Sheet 3 of 3)

Refinement	Subfield or refinement	Entry	Explanation and action
SPARE4		0 to 7	SPARE4. This field is used to turn on or off fast features for a specific trunk group. The result is site-specific based on implemented fast features. The default value is 0.
LCDDUR		0 to 60 minutes	LONG CALL DISCONNECT DURATION. This parameter enables the unanswered call disconnect feature. Enter the number of minutes to set the unanswered call disconnect timing, from 0 to 60 minutes, in one-minute increments. This is the length of time a call is allowed to remain unanswered before a disconnect is forced. The default value of 0 deactivates unanswered call disconnect timing.

GRPTYP=PRA250

The following table describes valid refinement data ranges when GRPTYP=PRA250.

GRPTYP=PRA250 refinement descriptions (Sheet 1 of 2)

Refinement	Subfield or refinement	Entry	Explanation and action
LCDDUR		0 to 60 minutes	LONG CALL DISCONNECT DURATION. This parameter enables the unanswered call disconnect feature. Enter the number of minutes to set the unanswered call disconnect timing, from 0 to 60 minutes, in one-minute increments. This is the length of time a call is allowed to remain unanswered before a disconnect is forced. The default value of 0 deactivates unanswered call disconnect timing.
SPARE1		Y or N	SPARE1. For future development. The default value is Y.

GRPTYP=PRA250 refinement descriptions (Sheet 2 of 2)

Refinement	Subfield or refinement	Entry	Explanation and action
SPARE2		Y or N	SPARE2. Set to Y to allow a 5- to 7-digit authcode to be followed by an optional account code, then by the address digits. Set to N to cause the trunk group to use the standard dial plan appropriate to its group type. *Note:* Ensure that field AUTHFRST is set to Y before *changing* SPARE2 to Y.
SPARE3		0 to 7	SPARE3. This field is used to turn on or off fast features for a specific trunk group. The result is site-specific based on implemented fast features. The default value is 0.
SPARE4		0 to 7	SPARE4. This field is used to turn on or off fast features for a specific trunk group. The result is site-specific based on implemented fast features. The default value is 0.

Datafill example

The following example shows datafill for table TRKGRP1.

```
CLLI GRPTYP DATA
_________________
PRI920DTN0 PRA250 0 Y Y 0 0
DAL225OGDTGS DAL NPRT NOLOOK N Y Y 0 NIL 0 0
ONLNX3ICDTG0 ONAL N NPRT NOLOOK N Y Y 0 NIL 0 0
ONT525OGMFWK ONAT N NPRT NOLOOK N Y Y 0 NIL 0 3
EAN6220GMFWK EANT N Y 7 C Y NONE NOLOOK N NOAUTHS Y 0 NIL Y 0 0
IMT304OGMFDD INT 0 N N Y Y 0 0
```

Table history

UCS12

The module was updated for editorial comments.

TRKGRP1 (end)

UCS09

Updated ACTPROMPT option field (AX0998).

UCS08

The CN field was deleted.

TRKGRP (ATR trunk group type)

Table name

TRKGRP (ATR trunk group type) table

Functional description

The Automatic Trunk Routing (ATR) maintenance trunk is the digital interface between the switch and an external ATR system. The ATR trunk is able to terminate to the following UCS DMS-250 switch trunk agencies: ONAL, DAL, IMT, ONAT, and EANT.

If the switch is carrier, table ATR records input data for ATR trunk groups.

Field descriptions

The following table describes field names, subfield names, and valid data ranges for table TRKGRP (ATR trunk group type).

(Sheet 1 of 3)

Field	Subfield or refinement	Entry	Explanation and action
GRPKEY		Valid CLLI datafilled in table CLLI	GROUP KEY. Enter the CLLI name used to identify the ATR trunk group type.
GRPTYP		ATR	GROUP TYPE. Enter the trunk group type ATR.
TRAFSNO		0 to 127	TRAFFIC SEPARATION NUMBER. Select entry as follows: If the switch has the optional traffic separation software, enter the outgoing traffic separation number (between 1 and 127) assigned to intersection. If traffic separation is not required, enter zero. If the switch has the software package that includes the Traffic Separation Peg Count feature package, the range of values for the outgoing traffic separation numbers are dependent upon parameter TFAN_OUT_MAX_NUMBER in the OFCENG table.

TRKGRP (ATR trunk group type) (continued)

(Sheet 2 of 3)

Field	Subfield or refinement	Entry	Explanation and action
			For a switch without the Traffic Separation Peg Count feature package, the range of values for the traffic separation numbers is 0 to 15. Northern Telecom (Nortel) recommends that outgoing traffic separation number 1 through 9 be reserved for generic traffic separation numbers. Refer to table TFANINT for more information regarding traffic separation numbers.
PADGRP		Valid pad group datafilled in table PADDATA	PAD GROUP. Enter the pad group name if pad groups are defined in table PADDATA. Enter NPDGP (fixed loss plan) if no pad group is required.
NCCLS			NO CIRCUIT CLASS. Upon exhausting the route list, No Circuit On-net Trunk (NCON) defines the No Circuit Class OM (in group OFZ2) to peg when a group is the last element in the route list. Enter one of the following types:
		NCRT	Enter NCRT for no circuit.
		NCTC	Enter NCTC for no circuit toll completing trunk.
		NCLT	Enter NCLT for no circuit local tandem trunk.
		NOSC	Enter NOSC for no circuit service circuit trunk.
		NCBN	Enter NCBN for no circuit business network trunk.
		NCID	Enter NCID for no circuit inward dial.
		NCOT	Enter NCOT for no circuit other trunk.
		NCIT	Enter NCIT for no circuit intertoll trunk.
		NCIM	Enter NCIM for no circuit intermachine trunk.
		NCON	Enter NCON for no circuit on-network trunk.

TRKGRP (ATR trunk group type) (end)

(Sheet 3 of 3)

Field	Subfield or refinement	Entry	Explanation and action
		NCOF	Enter NCOF for no circuit off-network trunk.
GRPINFO		see refinements	GROUP INFORMATION. Datafill the ATR trunk group type refinements.
	ORIGFLTR	5 to 255	ORIGINATIONI FILTER. Enter the minimum amount of time in 10-millisecond increments that the UCS DMS-250 switch observes origination (ground on tip conductor) from a central office before declaring origination.
	ODSCFLTR	5 to 255	ORIGINATING DISCONNECT FILTER. Enter the minimum amount of time in 10-millisecond increments that the UCS DMS-250 switch observes a sustained on-hook (disconnect) signal from the originating central office before declaring disconnect.

Datafill example

The following example shows sample datafill for table TRKGRP (ATR trunk group type).

```
GRPKEY GRPTYP TRAFSNO PADGRP NCCLS GRPINFO
_____________________________________________

ATRTRK ATR 0 NPDGP NCIT 7 16
MATR01 ATR 0 NPDGP NCIT 7 16
```

TRKGRP (C101 trunk group type)

Table name

TRKGRP (C101 trunk group type) table

Functional description

The 101 Communication Test Line is a maintenance trunk and is similar to the T101 trunk group type.

Field descriptions

The following table describes field names, subfield names, and valid data ranges for table TRKGRP (C101 trunk group type).

(Sheet 1 of 5)

Field	Subfield or refinement	Entry	Explanation and action
GRPKEY		Valid CLLI datafilled in table CLLI	GROUP KEY. Enter the CLLI name used to identify the C101 trunk group type.
GRPTYP		C101	GROUP TYPE. Enter the trunk group type C101.
TRAFSNO		0 to 127	TRAFFIC SEPARATION NUMBER. Select entry as follows: If the switch has the optional traffic separation software, enter the outgoing traffic separation number (between 1 and 127) assigned to intersection. If traffic separation is not required, enter zero. If the switch has the software package that includes the Traffic Separation Peg Count feature package, the range of values for the outgoing traffic separation numbers are dependent upon parameter TFAN_OUT_MAX_NUMBER in the OFCENG table. For a switch without the Traffic Separation Peg Count feature package, the range of values for the traffic separation numbers is 0 to 15.

TRKGRP (C101 trunk group type) (continued)

(Sheet 2 of 5)

Field	Subfield or refinement	Entry	Explanation and action
			Northern Telecom (Nortel) recommends that outgoing traffic separation number 1 through 9 be reserved for generic traffic separation numbers. Refer to table TFANINT for more information regarding traffic separation numbers.
PADGRP		Valid pad group datafilled in table PADDATA	PAD GROUP. Enter the pad group name if pad groups are defined in table PADDATA. Enter NPDGP (fixed loss plan) if no pad group is required.
NCCLS			NO CIRCUIT CLASS. Upon exhausting the route list, No Circuit On-net Trunk (NCON) defines the No Circuit Class OM (in group OFZ2) to peg when a group is the last element in the route list. Enter one of the following types:
		NCRT	Enter NCRT for no circuit.
		NCTC	Enter NCTC for no circuit toll completing trunk.
		NCLT	Enter NCLT for no circuit local tandem trunk.
		NOSC	Enter NOSC for no circuit service circuit trunk.
		NCBN	Enter NCBN for no circuit business network trunk.
		NCID	Enter NCID for no circuit inward dial.
		NCOT	Enter NCOT for no circuit other trunk.
		NCIT	Enter NCIT for no circuit intertoll trunk.
		NCIM	Enter NCIM for no circuit intermachine trunk.
		NCON	Enter NCON for no circuit on-network trunk.
		NCOF	Enter NCOF for no circuit off-network trunk.
GRPINFO		see refinements	GROUP INFORMATION. Datafill the C101 trunk group type refinements.

TRKGRP (C101 trunk group type) (continued)

(Sheet 3 of 5)

Field	Subfield or refinement	Entry	Explanation and action
	DIR	IC, OG, 2W	DIRECTION. Enter IC (incoming), OG (outgoing), or 2W (two-way) to define the direction of traffic flow.
	PRTNM	NPRT or valid pretranslator datafilled in table STDPRTCT	PRETRANSLATOR NAME. Enter a 4-character pretranslator name (datafilled in table STDPRTCT) if standard pretranslation is required. Enter NPRT for no pretranslation.
	SCRNCL	NSCRTINTTSWB TLANTLTN	SCREENING CLASS. Enter a screening class. NSCR indicates no screening.
	SELSEQ		SELECT SEQUENCE. Enter one of the following: MIDL, LIDL, ASEQ, DSEQ, CWCTH, CCWCTH, or WIDEBAND.
		MIDL	Enter MIDL (most idle) for a 2-way trunk group with a far-end link switch with least idle select sequence, or far-end is not a link list switch, or trunk group direction is incoming or outgoing.
		LIDL	Enter LIDL (least idle) for a 2-way trunk group with a far-end link list switch with most idle select sequence.
		ASEQ	Enter ASEQ (ascending sequence) to use a trunk group member immediately following the last trunk member chosen.
		DSEQ	Enter DSEQ (descending sequence) to select a trunk group member immediately preceding a trunk group member in use is the next trunk member chosen.
		CWCTH	Enter CWCTH (clockwise circular trunk hunting) to start a clockwise, circular search of the route list starting at the most recently released (MRR) trunk. The MRR reference point changes constantly. The search selects the first idle trunk.

TRKGRP (C101 trunk group type) (continued)

(Sheet 4 of 5)

Field	Subfield or refinement	Entry	Explanation and action
		CCWCTH	Enter CCWCTH (counterclockwise circular trunk hunting) to start a counterclockwise, circular search of the route list starting at the MRR trunk. The search selects the first idle trunk.
		WIDEBAND	Enter WIDEBAND to allow the agent to handle wideband calls. Only new trunk groups may specify wideband.
	SNPA	000 to 999	SERVING NUMBERING PLAN. Enter the digits to prefix when a local subscriber dials a local 7-digit number and an NPA prefix is required for outpulsing. This situation could occur if the operating company were to use code type LRTE in the HNPACODE table.
	STS	000 to 999	SERVING TRANSLATION SCHEME.

TRKGRP (C101 trunk group type) (continued)

(Sheet 5 of 5)

Field	Subfield or refinement	Entry	Explanation and action
	TRAFCLS	NIL, LINE, INTERCEPT, REPAIR, XX, IR, CA, DD, IA, IE, IT, LW, MN, MT, OA, RC, SP, TC, TE, TG, TM, TO, TS, TT, TW, AL, AN, CB, CD, CP, CS, DA, DS, IN, MA, MB, NT, OF, OW, PS, RR, RS, SC, SO, TA, TI, TK, TP, VC, VR, WE, MI, ON, BL, IM, OT, DL, DB, ID	TRAFFIC CLASS. Enter NIL (the default) for the traffic usage class where the trunk group is assigned.
	TSUSR	0 to 254	TRUNK GROUP SUSPEND/RESUME TIMER. Enter the timing value used for suspend timing. Range of values for TSUSR is 0 to 254, in 100-ms (.1-second) increments. The default is 160 (16 seconds). The total value of the timer is 0 to 25.4 seconds. When this option is not datafilled or is datafilled to 0, no suspend timing is done and the SUSPEND is treated as a RELEASE.

Datafill example

The following example shows sample datafill for table TRKGRP (C101 trunk group type).

```
GRPKEY GRPTYP TRAFSNO PADGRP NCCLS GRPINFO
_____________________________________________

OGDLT101 C101 0 NPDGP NCIT OG NPRT NSCR MIDL 214 214 NIL 160
ICDLT101 C101 0 NPDGP NCIT OG NPRT NSCR MIDL 214 214 NIL 160
```

TRKGRP (C101 trunk group type) (end)

Table history

UCS12

The module was updated for editorial comments.

UCS07

Trunk group type C101 was created.

TRKGRP.CAMA

Table name

Trunk Group Centralized Automatic Message Accounting (TRKGRP.CAMA)

Functional description

Centralized Automatic Message Accounting (CAMA) trunks connect the DMS-500 TOPS switch to an independent telco and have the call processing ability to handle automatic number identification (ANI) with information digits used for billing purposes. A CAMA trunk may interface with the following DMS-500 TOPS trunk agencies: DAL, EANT, ONAL, ONAT, IMT, ATR, and test lines.

If the switch is carrier, table TRKGRP.CAMA records input data for CAMA trunk groups.

Field descriptions

The following table describes field names, subfield names, and valid data ranges for table TRKGRP.CAMA.

(Sheet 1 of 9)

Field	Subfield or refinement	Entry	Explanation and action
GRPKEY		CLLI	GROUP KEY
	CLLI	alphanumeric	CLLI. Enter the CLLI assigned to the trunk group.
GRPTYP		CAMA	GROUP TYPE. Enter the trunk group type CAMA.

TRKGRP.CAMA (continued)

(Sheet 2 of 9)

Field	Subfield or refinement	Entry	Explanation and action
TRAFSNO		0-127	TRAFFIC SEPARATION NUMBER. Select entries as follows: • If the switch has the optional traffic separation software, enter the outgoing traffic separation number, 1-127, assigned to intersection. • If traffic separation is not required, enter zero. • If the switch has software package that includes the Traffic Separation Peg Count feature package, the range of values for the outgoing traffic separation numbers are dependent upon parameter TFAN_OUT_MAX_NUMBER in the Office Engineered table. • For a switch without the Traffic Separation Peg Count feature package, the range of values for the traffic separation numbers is 0-15. • It is recommended that outgoing traffic separation numbers 1 through 9 be reserved for generic traffic separation numbers.
PADGRP		alphanumeric or NPDGP	PAD GROUP. If pad groups in table PADDATA are defined and the PAD GROUP is required for this trunk group, enter the PAD GROUP name. If no PAD GROUP is required, enter NPDGP. (This means the fixed loss plan is used.)
NCCLS		NCRT	NO CIRCUIT CLASS TYPE. When route list is exhausted, NCOF (no circuit) defines the no circuit class operational measurement (in group OFZ2) pegged when group is the last element in the route list. The default value for this field is NCRT.

TRKGRP.CAMA (continued)

(Sheet 3 of 9)

Field	Subfield or refinement	Entry	Explanation and action
GRPINFO		alphanumeric	GROUP INFORMATION. This field consists of the following subfields: ALTTRTMT, ANIPDIAL, ANISEIZ, ANITYPE, CALLCHR, CARRID, CITYCODE, CONNGNPA, COS, DATACOND, DIALTONE, DIR, FASTIDGT, IEXCLINX, NODIGCTP, NODIGRTE, NPRETSUP, ONI, OHQ, OHQTERM, DATA, PRTNM, SDATA, SELSEQ, SNPA, STS, THOTLINE, TIMEBIAS, TRAFCLS, TRTMTSUP, and ZEROMPOS.
	ALTTRTMT	Y or N	ALTERNATE TREATMENTS. Enter Y if calls originating on this trunk group use the ALTERNAT subtable within the TMTCNTL table when routing to a treatment. Otherwise, enter N.
	ANIPDIAL	2-30	ANI PARTIAL DIAL TIMING. Enter the time, in seconds, that the trunk must wait for each ANI digit (after the first) before applying partial dial treatment. The default value for this field is 30.
	ANISEIZ	2-30	ANI SEIZURE TIMING. Enter the time, in seconds, that the trunk must wait for the first ANI digit before applying permanent signal treatment. The default value for this field is 30.
	ANITYPE	WK or REV	ANI REQUEST SIGNAL. Enter WK for wink start or REV for reversal. The default value for this field is REV.
	CALLCHR	LDS or $	CALL CHARACTERISTIC. This field checks the characteristics of a call in table CALLCHR. Enter LDS when long distance sensitive routing is available to the customer if LDS was previously added to table CALLCHR. Enter $ if long distance sensitive routing is not required. The default value for this field is $.

TRKGRP.CAMA (continued)

(Sheet 4 of 9)

Field	Subfield or refinement	Entry	Explanation and action
	CARRID	0000-9999	CARRIER IDENTIFICATION. Enter the number to identify the carrier of this trunk group. The default value for this field is 0000.
	CITYCODE	000-999	CITY CODE. Enter the city code associated with the authorization code. If city code screening is not applied to this authorization code, enter 000.
	CONNGNPA	numeric or NIL	CONNECTING NPA. When the trunk group is outgoing or two-way, enter the three-digit primary NPA code of the terminating switch. When the trunk group is incoming, enter NIL.
	COS	0-29	CLASS OF SERVICE. Enter the class of service code that will be used in screening the calls. The default value for this field is 0.
	DATACOND	Y or N	DATA CONDITIONED. Enter Y if this terminating or two-way trunk group is data conditioned, and if data calls may terminate on a circuit from this trunk group. Enter N if trunk is incoming. The default value for this field is N.
	DIALTONE	C, S or N	DIALTONE. Enter C if dialtone applied toward the subscriber is carrier dialtone (400 Hz). Enter S if standard dialtone (350 + 440 Hz) is applied. Enter N if no dialtone is required. The default value for this field is C.
	DIR	IC, OG, or 2W	DIRECTION. Enter IC (incoming), OG (outgoing), or 2W (two-way) to define the direction of traffic flow. The default value for this field is 2W.
	FASTIDGT	2-30	FAST INTERDIGITAL TIME. Enter the interdigital timing interval in seconds. When translations determine that the total number of digits is variable (such as, IDDD), FASTIDGT is used instead of partial dial timing after the minimum number of digits are input. The default value for this field is 30.

TRKGRP.CAMA (continued)

(Sheet 5 of 9)

Field	Subfield or refinement	Entry	Explanation and action
	IEXCLINX	0-63	INCOMING EXCLUSION INDEX. If the trunk group is incoming or two-way, enter the index into the table IEXCLUDE that consists of NPAs and NXXs to block or allow. Enter zero if incoming exclusion is not required (incoming trunk exclusion). The default value for this field is 0.
	NODIGCTP	NP, DD, OA, NL	NO DIGIT CALL TYPE. Enter the type of call assigned to calls with no incoming digits (seizure only): NP for no prefix, DD for direct dial, OA for operator assisted, or NL for NIL type of call. The default value for this field is DD.
	NODIGRTE	NONE, or POSITION table entry	NO DIGIT ROUTE. Enter POSITION table to route operator assisted calls. Enter NONE to route to the CAMA position. The default value for this field is NONE.
	NPRETSUP	OFFHOOK, ONHOOK, OFFHKWK	NO PREFIX RETURN SUPERVISION. Enter the return supervision for no prefix calls: off-hook (OFFHOOK), on-hook (ONHOOK), or off-hook wink (OFFHKWK). The default value for this field is OFFHOOK.
	ONI	Y or N	ONI CALL. Enter Y if all traffic on the trunk is ONI: ONI calls reroute to the CAMA position in the POSITION table. The default value for this field is N.
	OHQ	Y or N	OFFHOOK QUEUING. Enter Y if incoming calls from this trunk group can be offered off-hook queuing capability. Otherwise, enter N. The default value for this field is N.
	OHQTERM	Y or N	TERMINATING OFFHOOK QUEUING. Enter Y if calls terminating on this trunk group can be offered off-hook queuing. Otherwise, enter N. The default value for this field is N.
	DATA	Y or N	DATA. Allows enabling/disabling of DATA calls on CAMA trunks.

TRKGRP.CAMA (continued)

(Sheet 6 of 9)

Field	Subfield or refinement	Entry	Explanation and action
	PRTNM	alphanumeric or NPRT	STANDARD PRETRANSLATOR TABLE NAME. If standard pretranslation is required and trunk group is incoming or two-way, enter a one to four character pretranslator name. If trunk group is outgoing or pretranslation is not required, enter NPRT.
	SDATA	GRPTYPE, DEFANIFL	SIGNALING DATA
	GRPTYPE	REGULAR or SUPER	GROUP TYPE. Enter REGULAR when the direct dial start signal is ST. Enter SUPER when the direct dial start signal is ST2P. The default value for this field is REGULAR.
	DEFANIFL	CAMA, TOPS, TREAT	DEFAULT ANI FAILURE. Enter CAMA or TOPS to route to the CAMA or TOPS entry in the POSITION table. Enter TREAT to provide TOLL_ DENIED treatment when ANI is not received. The default value for this field is TREAT.
	SELSEQ	LIDL or MIDL	SELECT SEQUENCE. When trunk group is two-way and far end is a link list switch with most idle (MIDL) select sequence, enter least idle (LIDL) select sequence. When trunk group is two-way and far end is a link switch with least idle select sequence, or far end is not a link list switch, or trunk group direction is IC (incoming), or OG (outgoing), enter most idle select sequence. The default value for this field is MIDL.
	SNPA	numeric or NIL	SERVING NUMBERING PLAN. When a local subscriber dials a local seven-digit number and an NPA prefix is required for outpulsing, the SNPA is prefixed to the dialed number. This situation occurs if code types HNPA/LRTE or LRTE are used. If the trunk group is outgoing, always enter NIL. The default value for this field is NIL.

TRKGRP.CAMA (continued)

(Sheet 7 of 9)

Field	Subfield or refinement	Entry	Explanation and action
	STS	000-999, NIL	SERVING TRANSLATION SCHEME. For incoming and two-way trunk groups, enter the three-digit STS code identifying the serving translation scheme that the trunk group uses. Enter NIL for outgoing trunk groups.
	THOTLINE	Y or N	HOTLINE TERMTHOTLINEINATION. This determines whether or not hotline termination is necessary. Enter Y if calls are allowed to terminate to this trunk group only if they are hotline calls. Enter N (no screening) if all calls are allowed termination. For incoming trunk groups, enter N. The default value for this field is N.
	TIMEBIAS	-12-12	TIMEBIAS. If the originating trunk group and the switch are in different time zones, specify in one-hour increments the time difference between them. This shows the true origination time of the call that is necessary to apply the restricted usage by date and time feature. (For example, if a call originates in California and enters the switch in Texas, the TIMEBIAS is -2 hours.) Enter zero if there is no time zone difference. The default value for this field is 0.
	TRAFCLS	NIL	TRAFFIC CLASS. Enter the traffic usage class to which the trunk group is assigned. For CAMA trunk groups, enter NIL. The default value for this field is NIL.
	TRTMTSUP	OFFHOOK, ONHOOK, OFFHKWK	TREATMENT SUPERVISION. Enter the supervision required when translations route to a treatment, tone or announcement: off-hook (OFFHOOK), on-hook (ONHOOK), or off-hook wink (OFFHKWK). The default value for this field is OFFHKWK.
	ZEROMPOS	alphanumeric or NONE	ZERO MINUS POSITION. Enter the position in the POSITION table used to route 0- calls on this trunk group. Enter NONE if this does not apply to the trunk group. The default value for this field is NONE.

TRKGRP.CAMA (continued)

(Sheet 8 of 9)

Field	Subfield or refinement	Entry	Explanation and action
ANSWFLTR		5-255	ANSWER FILTER. Specify the minimum amount of time, in 10-millisecond increments, that the switch observes the answer before the answer is declared. Hardware answer is detected by monitoring the A or A&B bit values received from terminator for tie trunk, loop start FXS, and ground start FXS interfaces. A hardware answer signal for the time specified in this field is declared an answer.
ODSCFLTR		5-255	ORIGINATING DISCONNECT FILTER. Specify the minimum amount of time, in 10-millisecond increments, that the switch observes a sustained on-hook (disconnect) signal from the originating CO before declaring disconnect. The default value is 16 for all trunk group types. The ODSCFLTR field replaces the ONALDISC field.
ORIGFLTR		5-255	ORIGINATION FILTER. Specify the minimum amount of time, in 10-millisecond increments, that the switch observes origination (ground on tip conductor) from a CO before declaring origination. The default value is 16 for all trunk group types.
TDSCFLTR		5-255	TERMINATING DISCONNECT FILTER. Specify the minimum amount of time, in 10-millisecond increments, that the switch observes a sustained on-hook (disconnect) from the terminating CO before declaring disconnect. The default value is 16 for all trunk groups.
VPNDED		Y or N	VPN DEDICATED. Enter Y if trunk group is dedicated to a virtual private network (VPN) customer. Enter N if trunk group is available to all traffic.
SUPPCODE		0-11	SUPPLEMENTARY CODE DIGITS. This field specifies the number of supplementary code digits collected for Vnet CAMA calls. The default is 0.

TRKGRP.CAMA (continued)

(Sheet 9 of 9)

Field	Subfield or refinement	Entry	Explanation and action
STDATAB		Y or N	STANDARD ALL TRUNKS BUSY. This field specifies the treatment given to the CAMA terminating trunk group. Y indicates that GNCT treatment is applied to the CAMA trunk under the following conditions: the CAMA is the last choice in the route list for the call, all previous route choices were unavailable, and the CAMA is in the all trunks busy condition. This set of conditions is referred to as all routes busy (ARB). Value N indicates that BUSY treatment is applied in an ARB condition as described above. Default value is Y.
CCTREQ		Y or N	CUSTOMER CONNECT TIME REQUIRED. Determines if customer is to be charged at time of call answer or time of call connect. If Y, charging begins at time of call connection. If N, charging begins at time of call answer. Default value is N.
LCDDUR		0-60	LONG CALL DISCONNECT DURATION. Determines if a call is to be monitored for excessive pre-conversation time durations. If the pre-conversation duration is greater than LCDDUR, the call is treated. Enter 0 if feature is deactivated and no timing/monitoring is required. Enter 0 to 60 (value in minutes of the timer) if feature is activated. A number greater than 60 is invalid and disallowed. Default value is 0.
AUTHCODE		0-9	AUTHORIZATION CODE. This field provides the option to enter an authorization code anywhere between lengths 5 and 7. The default value is 07000.
SUSTIMER		0-250	Holds the suspend timeout values in 100 ms values. Default value for this filed is 20 (that is 2 seconds).

Datafill example

The following example shows sample datafill for table TRKGRP.CAMA.

GRPKEYCLLI	GRPTYP	TRAFSNO	PADGRP	NCCLS
MCAMAMF	CAMA	0	NPDGP	NCRT

GRPINFO
ALTTRTMT
N

ANIPDIAL	ANISEIZ	ANITYPE	CALLCHR	CARRID
4	4	WK	$	0000

CITYCODE	CONNGNPA	COS	DATACOND	DIALTONE
555	NIL	0	N	C

DIR	FASTIDGT	IEXCLINX	NODIGCTP	NODIGRTE
2W	4	0	DD	NONE

NPRETSUP	ONI	OHQ	OHQTERM	DATA
OFFHOOK	N	N	N	Y

PRTNM	SUSTIMER
NPRT	20

SDATA
GRPTYPE
REGULAR

DFANIFL
CAMA

SELSEQ	SNPA	STS	THOTLINE	TIMEBIAS
MIDL	214	101	N	0

TRAFCLSTRTMTSUP	ZEROMPOS	ANSWFLTR	ODSCFLTR
NIL	OFFHKWK	NONE	16	16

ORIGFLTR	TDSCFLTR	VPNDED	SUPPCODE	STDATAB
7	16	N	0	N

CCTREQ	LCDDUR	AUTHCODE
N	23	07000

Table History

MCI05 changed CARRID field from three-digit field to four-digit field.

TRKGRP type DS0

Digital Signal Level 0

Trunk group type DS0 provides a service switching point (SSP) office with Common Channel Signaling 7 (CCS7) link access to a signaling transfer point (STP) node. In addition, the DS-0 links that interface to these nodes can respond to network-initiated maintenance action.

Trunk group type DS0 is used if a digital trunk controller (DTC) has DS-0 links. A DS-0 link consists of a single trunk and is not used for any call processing application.

Datafill

The following table lists the datafill for table TRKGRP type DS0.

Field descriptions (Sheet 1 of 2)

Field	Subfield or refinement	Entry	Explanation and action
GRPKEY		see subfield	*Group key* This field consists of subfield CLLI.
	CLLI	alphanumeric (1 to 16 characters)	*Common language location identifier* Enter the common language location identifier (CLLI) code assigned to the trunk group in table CLLI.
GRPINFO		see subfields	*Variable group data* This field consists of subfields GRPTYP, TRAFSNO, PADGRP, and NCCLS.Refer to section “General field information" in table TRKGRP for information on an alternate structure for this field that results from the datafill of table CUSTFLDS.
	GRPTYP	DS0	*Group type* Enter DS0 to specify the group type used for DS-0 links.

TRKGRP type DS0 (continued)

Field descriptions (Sheet 2 of 2)

Field	Subfield or refinement	Entry	Explanation and action
	TRAFSNO	numeric (0 to 127)	Enter the incoming and outgoing traffic separation number assigned to the trunk group. If a traffic separation number is not required, enter 0 (zero). For switches with software package NTX085AA (Traffic Separation Peg Count), enter a value from 1 to the value of office parameter TFAN_OUT_MAX_NUMBER in table OFCENG. For switches without software package NTX085AA, enter a value from 1 to 15. Incoming and outgoing traffic separation numbers 1 to 9 should be reserved for generic traffic separation numbers. For more information, refer to table TFANINT.
	PADGRP	alphanumeric (1 to 5 characters)	*Pad group* Enter the name of the pad group assigned to the trunk group in table PADDATA.For more information, refer to table PADDATA.
	NCCLS	NCRT	*Operational measurements no-circuit class* This field is not required for incoming trunk groups. Enter NCRT (no circuit). For more information, refer to table TRKGRP and the *Operational Measurements Reference Manual*.

TRKGRP type DS0 (end)

Datafill example

The following example shows sample datafill for table TRKGRP type DS0.

MAP display example for table TRKGRP type DS0

```
GRPKEY          GRPINFO
_____________________________________________________________

DS0TLINK        DS0 0 NPDGP NCRT
```

TRKGRP (DAL trunk group type)

Table name

TRKGRP (DAL trunk group type) table

Functional description

A Dedicated Access Line (DAL) allows a dedicated connection between a switch and a PBX key system or single telephone. The switch supports originating, terminating, and two-way access over loop-start, ground-start, and tie-trunk arrangements. Single-line telephones and key systems are directly connected using ground or loop start signaling. This trunk group type supports CAIN processing.

Field descriptions

The following table describes field names, subfield names, and valid data ranges for table TRKGRP (DAL trunk group type).

Field	Subfield or refinement	Entry	Explanation and action
GRPKEY		Valid CLLI datafilled in table CLLI	GROUP KEY. Enter the CLLI name used to identify the DAL trunk group type.
GRPTYP		DAL	GROUP TYPE. Enter the trunk group type DAL.

TRKGRP (DAL trunk group type) (continued)

Field	Subfield or refinement	Entry	Explanation and action
TRAFSNO		0 to 127	TRAFFIC SEPARATION NUMBER. Select entry as follows: • If the switch has the optional traffic separation software, enter the outgoing traffic separation number, 1-127, assigned to intersection. • If traffic separation is not required, enter zero. • If the switch has software package that includes the Traffic Separation Peg Count feature package, the range of values for the outgoing traffic separation numbers are dependent upon parameter TFAN_OUT_MAX_NUMBER in the OFCENG table. • For a switch without the Traffic Separation Peg Count feature package, the range of values for the traffic separation numbers is 0-15. • It is recommended that outgoing traffic separation numbers 1 through 9 be reserved for generic traffic separation numbers. Further information concerning traffic separation numbers can be found in table TFANINT.
PADGRP		NPDGP or valid pad group defined in table PADDATA	PAD GROUP. Enter the pad group name if pad groups are defined in table PADDATA. Enter NPDGP (fixed loss plan) if no pad group is required.

TRKGRP (DAL trunk group type) (continued)

Field	Subfield or refinement	Entry	Explanation and action
NCCLS		NCRT, NCTC, NCLT, NOSC, NCBN, NCID, NCOT, NCIT, NCIM, NCON, NCOF	NO CIRCUIT CLASS TYPE. Upon exhausting the route list, No Circuit Onnet Trunk (NCON) defines the No Circuit Class OM (in group OFZ2) to peg when group is the last element in the route list. Enter one of the following types: • NCRT=no circuit • NCTC=no circuit toll completing trunk • NCLT=no circuit local tandem trunk • NOSC=no circuit service circuit trunk • NCBN=no circuit business network trunk • NCID=no circuit inward dial • NCOT=no circuit other trunk • NCIT=no circuit intertoll trunk • NCIM=no circuit intermachine trunk • NCON=no circuit on-network trunk • NCOF=no circuit off-network trunk
GRPINFO		see refinements	GROUP INFORMATION. Datafill the DAL trunk group type refinements.
	COS	0 to 119	CLASS OF SERVICE. Enter the class of service code used in screening calls.
	DIR	IC, OG, 2W	DIRECTION. Enter IC (incoming), OG (outgoing), or 2W (two-way) to define the direction of traffic flow.
	PRTNM	NPRT or valid pretranslator datafilled in table STDPRTCT	STANDARD PRETRANSLATOR TABLE NAME. Enter a 4-character pretranslator name, if standard pretranslation is required. Enter NPRT for no pretranslation. ***Note:*** This name is datafilled in table STDPRTCT.

TRKGRP (DAL trunk group type) (continued)

Field	Subfield or refinement	Entry	Explanation and action
	SELSEQ	LIDL, MIDL, ASEQ, DSEQ, CWCTH, CCWCTH, WIDEBAND	SELECT SEQUENCE. Enter one of the following: MIDL, LIDL, ASEQ, DSEQ, CWCTH, CCWCTH, or WIDEBAND. • Enter Least Idle (LIDL) for a 2-way trunk group with a far-end link list switch with most idle select sequence. • Enter most idle (MIDL) for a 2-way trunk group with a far-end link switch with least idle select sequence, or far end is not a link list switch, or trunk group direction is incoming or outgoing. • Enter ascending sequence (ASEQ) to use a trunk group member immediately following the last trunk member chosen. • Enter descending sequence (DSEQ) to select a trunk group member immediately preceding a trunk group member in use is the next trunkmember chosen. • Enter clockwise circular trunk hunting (CWCTH) to start a clockwise, circular search of the route list starting at the most recently released (MRR) trunk. The MRR reference point changes constantly. The search selects the first idle trunk. • Enter counterclockwise circular trunk hunting (CCWCTH) to start a counterclockwise, circular search of the route list starting at the MRR trunk. The search selects the first idle trunk. • Enter wideband (WIDEBAND) to enable the trunk group to handle wideband calls.
	ODSCFLTR	5 to 255	ORIGINATING DISCONNECT FILTER. Enter the minimum amount of time in 10-millisecond increments that the UCS DMS-250 switch observes a sustained on-hook (disconnect) signal from the originating central office before declaring disconnect.

TRKGRP (DAL trunk group type) (continued)

Field	Subfield or refinement	Entry	Explanation and action
	ORIGFLTR	5 to 255	ORIGINATION FILTER. Enter the minimum amount of time in 10-millisecond increments that the UCS DMS-250 switch observes origination (ground on tip conductor) from a central office before declaring origination.
	TDSCFLTR	5 to 255	TERMINATING DISCONNECT FILTER. Enter the minimum amount of time in 10-millisecond increments that the UCS DMS-250 switch observes on-hook before declaring disconnect.
	ANSWFLTR	5 to 255	ANSWER FILTER. Enter the minimum amount of time in 10-millisecond increments that the UCS DMS-250 switch observes answer before answer is declared. ***Note:*** Monitoring the A or A- and B-bit values received from terminator for tie trunk, loop start foreign exchange station (FXS), and ground start FXS interfaces detects hardware answer. A hardware answer signal for the time specified in this field is declared an answer.
	DIALTONE	C, N, S	DIALTONE. Enter C to apply carrier dialtone (400 Hz) toward the subscriber. Enter S to apply standard dialtone (350 + 440 Hz). Enter N to apply no dialtone.
	DIGSOUTP	0 to 10	DIGITS TO OUTPULSE. Enter the number of digits to outpulse to a PBX connected by means of an outgoing or 2-way DAL. Enter 0 for incoming DALs.
	RETOFFHK	AOD, ADC, AOS, AOP, AAD, NIL	RETURN OFFHOOK. This field specifies when the UCS DMS-250 switch returns a sustained offhook over a tie trunk interface to a PBX. Enter AOD for after origination. Enter ADC for after digit collection. Enter AOP for after outpulsing. Enter AAD for after answer detected. Enter AOS for after outgoing seizure. Enter NIL when a DAL connects to a telephone.

TRKGRP (DAL trunk group type) (continued)

Field	Subfield or refinement	Entry	Explanation and action
	TRAFCLS	NIL, LINE, INTERCEPT, REPAIR, XX, IR, CA, DD, IA, IE, IT, LW, MN, MT, OA, RC, SP, TC, TE, TG, TM, TO, TS, TT, TW, AL, AN, CB, CD, CP, CS, DA, DS, IN, MA, MB, NT, OF, OW, PS, RR, RS, SC, SO, TA, TI, TK, TP, VC, VR, WE, MI, ON, BL, IM, OT, DL, DB, ID	TRAFFIC CLASS. Enter NIL (the default) for the traffic usage class where the trunk group is assigned.
	AUTHDIAL	0 to 15	AUTHORIZATION CODE DIALED. Enter the number of dialed digits required for a valid authorization code. Enter 0 for a completely filed authorization code.
	FASTIDGT	2 to 30	FAST INTERDIGITAL TIME. Enter the fast interdigital time. Fast interdigital timing is used for international dialing. A minimum and maximum number of digits to collect is specified in the Standard Pretranslator table STDPRTCT for IDDD calls. (Refer to subtable STDPRT in this document for further information.) The UCS DMS-250 switch uses the Partial Dial Timing parameter specified in table TRKSGRP for the minimum required digits and uses the fast interdigital timing value for the remaining digits. This field is only used as a digit collection timer if the STDPRTCT selector IN is used. Table TRKSGRP digit collection timer PARTDIAL is used if the operating company personnel use selector IP in table STDPRTCT.

TRKGRP (DAL trunk group type) (continued)

Field	Subfield or refinement	Entry	Explanation and action
	OPART	0 to 999	ORIGINATING PARTITION. Enter the originating partition number to be associated with the trunk group and translated to a serving translation scheme (STS) for region code screening.
RECALLDT		AUTO, MANUAL, NONE	RECALL DIALTONE. Enter one of the following: • AUTO. For the subscriber to automatically receive dialtone after the initial called party disconnect or upon completion of a treatment. • MANUAL. Dialing an octothorpe (#) or an asterisk (*) can reoriginate dialtone. • NONE. Indicates neither MANUAL nor AUTO recall dialtone is used. NONE is the default.
	SNPA	000 to 999	SERVING NUMBERING PLAN. Enter the required number for incoming trunk groups. Enter NIL for outgoing trunk groups. The SNPA is prefixed to the dialed number when a local subscriber dials a local 7-digit number that needs the NPA for outpulsing. This situation occurs if the operating company uses code type LRTE in HNPACODE.
	TIMEBIAS	-12 to 12	TIMEBIAS. Enter the timebias. If the originating trunk group and the UCS DMS-250 switch are in different time zones, specify in one-hour increments the time difference between them. This shows the subscriber's true origination time which is needed to apply the restricted usage by date and time feature (for example, if a call originates in California and enters the UCS DMS-250 switch in Texas, the TIMEBIAS is -2 hours). Enter zero if there is no time zone difference.
	VAUTHFLD	vector of up to 15 digits	AUTHORIZATION CODE. Enter the authorization code digits to be filed within the trunk group so the subscriber does not have to dial the digits.

TRKGRP (DAL trunk group type) (continued)

Field	Subfield or refinement	Entry	Explanation and action
	ZEROMPOS	NONE, or valid position datafilled in table POSITION	ZERO MINUS POSITION. Enter the type of position to use to route Zero Minus (0-) calls on this trunk group. Enter NONE if 0- calls are not routed on this trunk group.
	ZONE	0 to 9, A, B, C, AUTO	ZONE. Enter a zone type number. Use this field to calculate if looparound IMTs with echo canceller are needed. Add the ZONE number assigned to the originating trunk group to the ZONE number assigned to the first choice in the terminating route list.
	BCNAME	Valid BC datafilled in table BCDEF	BEARER CAPABILITY NAME. Enter any value previously defined in table BCDEF. This field contains the bearer capability name associated with the trunk.
	AUTHFRST	Y or N	AUTHCODE FIRST. Enter the following: • Y, if the authorization code comes before the dialed number (DN). • N, and datafill the AUTHTONE refinement, if the authorization codes come after the DN. Refer to the AUTHFRST=N section for refinement datafill.
	ADIN	0 to 99	AUTHCODE DATABASE INDEX NUMBER. Enter the ADIN index number. This field indexes into the AUTHCODE table. Enter 0 for the default value.
	AIOD	Y or N	AUTO IDENTIFICATION OF OUTWARD DIALING. Enter the following: • Y to identify outward digits. When the value for this field is set to Y, datafill subfields AIODDN, AIODII, and AIODGRP. Field PANIVAL must be set to NONE before field AIOD can be set to Y. Refer to the AIOD=Y section for subfield datafill. • N (default) for the system to ignore this feature.

TRKGRP (DAL trunk group type) (continued)

Field	Subfield or refinement	Entry	Explanation and action
	ONNETTRK	Y or N	ONNET TRUNK. Enter Y (default) to consider the DAL as on-net. Enter N to consider the DAL off-net.
		PANIVAL	PANI VALUE. Enter one of the following PANI formats: AUTHANI, ANIPIN, ANISNPA, AUTHONLY. ***Note:*** Authorization codes and PINs are validated, but PANIs are not.
		AUTHANI	Entering AUTHANI selects the following formats: • 7-digit AUTHCODE + 3-digit PIN — used when a partially- or fully-dialed authorization code and a filed 3-digit PIN are available. • 3-digit SNPA + 7-digit AUTHCODE — used when the PIN is not 3-digits in length.
		ANIPIN	Enter ANIPIN to select the following format: 7-digit AUTHCODE + 3-dig PIN
		ANISNPA	Enter ANISNPA to select the following format: 3-digit SNPA + 7-digit AUTHCODE
		AUTHONLY	Entering AUTHONLY selects the following formats: • 7-digit AUTHCODE + 3-digit PIN — used when a partially- or fully-dialed authorization code and a filed 3-digit PIN are available. • 3-digit SNPA + 7-digit AUTHCODE — used when the PIN is not 3-digits in length.
		ANINPA	Entering ANINPA selects the following format: A 3-digit NPA
	PANIINFO	Two-digit entry (00 to 99)	PSEUDO AUTOMATIC NUMBER IDENTIFICATION INFORMATION DIGITS. Enter the 2-digit value identifying the information digits. The default value for this field is 00 (normal call).

TRKGRP (DAL trunk group type) (continued)

Field	Subfield or refinement	Entry	Explanation and action
	TSUSR	0 to 254	TRUNK GROUP SUSPEND/RESUME TIMER. TSUSR. Enter timing value used for suspend timing. Range of values for TSUSR is 0 to 254, in 100-ms (.1 second increments). The default is 160 (16 seconds). The total value of the timer is 0 to 25.4 seconds. When this option is not datafilled or is datafilled to 0, no suspend timing is done and the SUSPEND is treated as a RELEASE.
	OPTION		OPTION. Datafill this field to specify optional features; enter up to 35 options.
		NIL	Nil. Enter NIL to remove an option.
		MCCS	MECHANIZED CALLING CARD SERVICE. This option is not datafillable when the Basic Calling Card Services option is set to IDLE. When the option is ON, option MCCS is datafillable. The ON to IDLE transition requires that the datafill in this option be removed.
		OHQ	OFFHOOK QUEUING. Enter OHQ to allow incoming calls from this trunk group to use off-hook queuing capability on a terminating trunk group. Omit OHQ to disable.
		OHQTERM	TERMINATING OFFHOOK QUEUING. Enter OHQTERM to allow off-hook queuing for terminating calls on this trunk group. Omit OHQTERM to disable.
		IEXCLINX	INCOMING EXCLUSION INDEX. Enter the IEXCLINX option when the trunk group is incoming or 2-way. Refer to the OPTION=IEXCLINX section for refinement datafill.
		VPNSIX	VIRTUAL PRIVATE NETWORK 6-DIGIT DIALING. Enter VPNSIX to enable 6-digit dialing for VPN services. Omit VPNSIX to disable.
ACPROMPT		N or Y	ACCOUNT PROMPT. If set to Y, the ACTONE field is allowed to be datafilled. If set to N, the ACTONE field will not be prompted.

TRKGRP (DAL trunk group type) (continued)

Field	Subfield or refinement	Entry	Explanation and action
	ACTONE	N or Y	ACCOUNT TONE. If set to Y, the account code prompt tone and tone duration are allowed to be datafilled. If set to N, the tone type and duration fields will not be prompted for a datafill.
	TONE_TYPE	STANDARD, CARRIER	TONE TYPE. Enter value for STANDARD prompt tone (350/440Hz) or CARRIER prompt tone (400Hz) when ACTONE field is Y.
	DURATION	LONG, SHORT	DURATION. Enter duration for TONE_TYPE as LONG (continuous) tone or SHORT (a one second burst of tone) when ACTONE field is Y.
		COSOVE	CLASS OF SERVICE OVERRIDE. Enter COSOVE to override class of service screening. Additional digits must be dialed when class of service is overridden. Omit COSOVE to activate class of service screening.
		SCRNCL	SERVICE SCREENING CLASS. Enter the SCRNCL option. Refer to the OPTION=SCRNCL section for refinement datafill.
		ALTSEIZ	ALTERNATE SEIZURE. The ALTSEIZ field activates different AB-bit seizure configurations for FXOs. Enter ALTSEIZ to set the circuit on a DTC using bit signaling equal to AB=10. Omit ALTSEIZ so the circuit is not a DTC and the bit signaling equals AB=00.
		CONDHOTL	CONDITIONAL HOTLINE. Enter CONDHOTL to enable this trunk group as a conditional hotline. Omit CONDHOTL if the trunk group is not a conditional hotline.
		DETDIAL	DIALTONE DETECTION. Enter DETDIAL to enable dialtone detection as a proceed to send a signal before outpulsing. This pertains to outgoing or 2-way FXO trunks only. Omit DETDIAL to disable.

TRKGRP (DAL trunk group type) (continued)

Field	Subfield or refinement	Entry	Explanation and action
		ATDANS	AUDIO TONE DETECTOR ANSWER. Enter ATDANS to enable the operating companies ability to detect software answer (rather that hardware answer) on DAL tie trunks. ATDANS is only available to outgoing or 2-way trunks. When this field is datafilled, the terminating DAL attaches an audio tone detector (ATD) and attempts to provide software answer. Otherwise, the terminating DAL uses the hardware answer capability. Refer to the OPTION=ATDANS section for refinement datafill.
		ALTTRTMT	ALTERNATE TREATMENTS. Enter ALTTRTMT to enable calls originating on this trunk group to use the ALTERNAT subtable within the TMTCNTL table when routing to a treatment. Omit ALLTRTMT to disable.
		INTERVPN	INTER VIRTUAL PRIVATE NETWORK. Enter INTERVPN if this trunk supports IVPN dialing. Whenever this field is datafilled the trunk must be busied (BSY) and returned to service (RTS). Omit INTERVPN if the trunk is not supporting IVPN dialing.
		REORGVAL	REORIGINATION VALIDATION. Enter REORGVAL to specify the revalidation of a reoriginated calling card call.
		VARDIAL	VARIABLE LENGTH DIALING PLAN. Enter VARDIAL to enable variable length customer dialing. Omit VARDIAL to disable.
		ENHANSUP	ENHANCED ANSWER SUPERVISION. Enter ENHANSUP to define if call duration timing starts when the terminating party provides an answer signal (off-hook, answer messages, or connect) or when the terminator sends an EOP, progress/alert, or ACM (depending on the terminator's signaling type).

TRKGRP (DAL trunk group type) (continued)

Field	Subfield or refinement	Entry	Explanation and action
		CPIALLOW	CALLING PARTY IDENTIFICATION ALLOWED. Enter CPIALLOW to allow the called party to receive one of the following: • ANI and information digits • service NPA (SNPA) and information digits with a value of 02, indicating ANI failure from a nonconforming end office. The CPIALLOW option provides the option of choosing between the ISUP CPN or CGN when outpulsing on terminating DAL-TIE agents and originating on ISUP agents. If it is not an ISUP origination (or trigger CAIN) then subfield values do not apply.The CPIALLOW option includes a choice of 4 sub-options datafilled with the values CPNONLY, CGNONLY, CPNPREF, CGNPREF when populating an outgoing PTS ANI.
	CPNONLY		The CPN is used to populate the outgoing CLID. If a CPN is not available, or the CPN's PI bit is set to restricted, no CLID will be delivered.
	CGNONLY		The CGN is used to populate the outgoing CLID. If a CGN is not available, no CLID will be delivered.
	CPNPREF		The CPN is used to populate the outgoing CLID. If a CPN is not available, or the CPN's PI bit is set to restricted, the CGN will be used to populate the outgoing CLID. If neither a CPN or CGN is available, no CLID will be delivered.
	CGNPREF		The CGN is used to populate the outgoing CLID. If a CGN is not available, the CPN will be used to populate the outgoing CLID. If neither a CPN or CGN is available, or the CPN's PI bit is set to restricted, no CLID will be delivered.
		CPN	CALLING PARTY NUMBER. Datfill the PRESIND and CPNDIGS refinement.
	PRESIND	ALLOW, DISALLOW	Enter Allow or Disallow and datafill the CPNDIGS refinement.

TRKGRP (DAL trunk group type) (continued)

Field	Subfield or refinement	Entry	Explanation and action
	CPNDIGS	Vector of up to 10 digits	Enter a vector of upto 10 digits. However only 3, 6, or 10 digits may be provisioned.
		OPNOAUTH	OPERATOR NO AUTHCODE. An authcode is not required for 0-, 0+, or 01+ calls when the OPNOAUTH feature is activated.
		VANIDB	VERIFY IN ANI DATABASE. ANI database failure treatment (ADBF) is given to PANI and FGD cut-through calls which fail screening in table ANISCUSP.
		CAIN	CARRIER ADVANCED INTELLIGENT NETWORK. Enter CAIN to indicate the originating agent is capable of using CAIN services.
		CAINGRP	CAIN GROUP. Enter CAINGRP to specify a CAIN subscription group for the originating agency. Refer to the OPTION=CAINGRP section for refinement datafill.
		LATA	LOCAL ACCESS TRANSPORT AREA. Datafill the LATAID and LATA_IDX refinement.
	LATAID_IDX	Valid index into table LATAID, NILLLATA	Enter a valid index or enter NILLLATA. If NILLLATA is provisioned then the OPTION does not display and no error message is generated.
		TMCICBLK	TERMINATING TRUNK CIC BLOCKING. Enter TMCICBLK to specify that CIC is to be blocked for calls on SS7-FGD, SS7-IMT, or MF-FGD trunks. Enter datafill for the TMCICBLK refinement.

TRKGRP (DAL trunk group type) (continued)

Field	Subfield or refinement	Entry	Explanation and action
	TMCICBLK	BLK_CIP, BLK_TNS, BLK_BOTH	Enter one of the following refinements for TMCICBLK: • BLK_CIP. Enter BLK_CIP for SS7 trunks to block the delivery of the CIP parameter, or for PTS trunks to block delivery of the CIC for national calls. • BLK_TNS. Enter BLK_TNS for SS7 trunks to block the delivery of the TNS parameter, or for PTS trunks to block delivery of the CIC for international calls. • BLK_BOTH. Enter BLK_BOTH for PTS and SS7 trunks to block delivery of the CIC.
		DEFCIC	DEFAULT CARRIER IDENTIFICATION CODE ROUTING. If this option is set, translations and routing are based on the default CIC. Refer to section OPTION=DEFCIC for refinement datafill.
		CICSIZE	CARRIER IDENTIFICATION CODE SIZE. If CICSIZE is not specified for a trunk, a size of 3DIGS is used for the call. Enter datafill for the SIZE refinement.
	SIZE	3DIGS, 4DIGS	SIZE. Enter the value of 3DIGS or 4DIGS to specify either a 3-digit or 4-digit CIC.
		NETSEC	NETWORK SECURITY. When this option is set on the switch, the switch generates a NETS601 log report for two cases: • When answer is detected at the terminating end of an international call. • When answer is detected on a World Zone One call to an NPA datafilled in table WZONE. The NETSEC option incudes the origination and termination indicators and their corresponding profile indices. Datafill refinements: ORIG_NETSEC, ORIG_PROFIDX,TERM_NETSEC, TERM_PROFIDX

TRKGRP (DAL trunk group type) (continued)

Field	Subfield or refinement	Entry	Explanation and action
	ORIG_NETSEC	Y or N	Enter Y to enable NETSEC functionality on origination and datafill the profile index refinement. If ORIG_NETSEC is set to N, the NETSEC functionality is disabled on origination and the corresponding profile index is not used during call processing.
	ORIG_PROFIDX	0 to 255	Enter value range from 0 to 255 for origination profile index.
	TERM_NETSEC	Y or N	Enter Y to enable NETSEC functionality on termination and datafill the profile index refinement. If TERM_NETSEC is set to N, the NETSEC functionality is disabled on termination and the corresponding profile index is not used during call processing.
	TERM_PROFIDX	0 to 255	Enter value range from 0 to 255 for termination profile index
		STRMBGDP	STROMBERG DIAL PLAN. Enter STRMBGDP to change the dialing plan to allow a 7-digit authorization code to be followed by an optional account code and the address digits. The dialing plan is: AUTHCODE + (optional PROMPT) + optional ACCT + (optional PROMPT) + ADDR ***Note 1:*** Enable the optional prompt prior to account code collection by datafilling the ACPROMPT option. ***Note 2:*** Enable the optional prompt prior to address collection by datafilling the PINADDRP refinement (table TRKGRP1) to Y.
		OPCHOICE	OPCHOICE. When this option is set, datafill the the OPCHIDX refinement. Refer to the OPTION=OPCHOICE for refinement datafill.
		CDRTMPLT	CDR TEMPLATE. Use this option to define a template for formatting CDRs. Refer to the OPTION=CDRTMPLT section for refinement datafill.

TRKGRP (DAL trunk group type) (continued)

Field	Subfield or refinement	Entry	Explanation and action
		JIP	JURISDICTION INFORMATION PARAMETER. Enter JIP to specify a JIP for a call when one is not available from the incoming call. Refer to section OPTION=JIP for refinement datafill.
		TCAIN	TERMINATING CAIN. Enter TCAIN to indicate that the trunk group is AIN capable when the trunk is the terminating agent. This option must be set in order for the trunk group to trigger on any AIN events related to the Terminating Call Model. This option must also be turned on for triggering on an Office basis.
		TCAINGRP	TERMINATING CAIN GROUP. Enter TCAINGRP to specify the terminating CAIN group for the trunk group. Enter datafill for the CAINGRP refinement.
	CAINGRP	valid CAINGRP	CAIN GROUP. Enter a valid CAINGRP from table CAINGRP.
		TRGPREFX	TRIGGER PREFIX. This option provides prefix/no-prefix indication information for AIN. WhenTRGPREFX is selected, the DMS-250 switch uses the Serving Numbering Plan (SNPA) to prefix the 7-digit numbers before querying the SCP. Provision after the OFFHKDEL table processing is complete.
		RSRV1	This optional parameter is reserved for future use.
		RSRV2	This optional parameter is reserved for future use.
		RSRV3	This optional parameter is reserved for future use.

TRKGRP (DAL trunk group type) (continued)

AIOD = Y

When AIOD=Y, datafill the AIODDN, AIODII, and AIODGRP refinements.

Refinement	Subfield or refinement	Entry	Explanation and action
AIODDN		10 digits(0 to 9)	AUTO IDENTIFICATION OF OUTWARD DIALING DESTINATION NUMBER. Enter the outward dialing destination digits.
AIODII		2 digits (0 to 9)	AUTOMATIC IDENTIFICATION OF OUTWARD DIALING INFORMATION DIGITS. Enter the 2-digit field to use as information digits for AIOD calls. These digits are used for operator-assisted or operator-handled calls, and are recorded in the INFODIG field of the call detail record.
AIODGRP		Valid CLLI datafilled in table CLLI	AUTO IDENTIFICATION OUTWARD DIALING GROUP. Enter the CLLI name of the outward dialing group type.

AUTHFRST=N

When AUTHFRST=N, datafill the AUTHTONE refinement.

Refinement	Subfield or refinement	Entry	Explanation and action
AUTHTONE			AUTHORIZATION TONE. Enter one of the following: STANDARD or STUTTER.
		STANDARD	Enter STANDARD if a standard dial tone is required.
		STUTTER	Enter STUTTER if a stutter dial tone is required.

TRKGRP (DAL trunk group type) (continued)

OPTION=IEXCLINX

When OPTION=IEXCLINX, datafill the IEXCLINX refinement.

Refinement	Subfield or refinement	Entry	Explanation and action
IEXCLINX		0 to 255	INCOMING EXCLUSION INDEX. Enter a number between 0 and 255 to index into table IEXCLUDE. Table IEXCLUDE indicates NPAs and NXXs to block or allow.

OPTION=SCRNCL

When OPTION=SCRNCL, datafill the SCRNCL refinement.

Refinement	Subfield or refinement	Entry	Explanation and action
SCRNCL		NSCRTINTT SWBTLANTL TN	SCREENING CLASS. Enter a screening class. NSCR indicates no screening.

OPTION=ATDANS

When OPTION=ATDANS, datafill the DELAYATD refinement.

Refinement	Subfield or refinement	Entry	Explanation and action
DELAYATD		1 to 100	AUDIO TONE DETECTOR DELAY. Enter an amount of time to delay ATD.

OPTION=DEFCIC

When OPTION=DEFCIC, datafill the CIC, OUTPULSE, OPERRTE, ANIRTE, CAINCIC refinements.

Refinement	Subfield or refinement	Entry	Explanation and action
CIC		0000 to 9999	CARRIER IDENTIFICATION CODE. Enter the default CIC digits to be outpulsed.
OUTPULSE		Y or N	OUTPULSE. Enter Y or N to use the default CIC for outpulsing.
OPERRTE		Y or N	OPERRTE. Enter Y or N to use the default CIC as an index into table OPERRTE.

TRKGRP (DAL trunk group type) (continued)

Refinement	Subfield or refinement	Entry	Explanation and action
ANIRTE		Y or N	AUTOMATIC NUMBER IDENTIFICATION ROUTING. Enter Y or N to use the default CIC during ANI screening. ***Note:*** SOC UTRS0200 must be on before this option is used for a call.
CAINCIC		Y or N	CARRIER ADVANCED INTELLIGENT NETWORK CARRIER IDENTIFICATION CODE. Enter Y or N to use the default CIC by CAIN in the Carrier Parameter of an outgoing TCAP query message. ***Note:*** CAIN0100 SOC must be on before this option is used for a call.

OPTION=OPCHOICE

When OPTION=OPCHOICE, datafill the OPCHIDX refinement.

Refinement	Subfield or refinement	Entry	Explanation and action
OPCHIDX		0 to 1023	OPERATOR CHOICE INDEX. This index points to a tuple in table OPCHOICE.

TRKGRP (DAL trunk group type) (continued)

OPTION=CDRTMPLT

When OPTION=CDRTMPLT, datafill the TMPLTIDX and USEEDIT refinements.

Refinement	Subfield or refinement	Entry	Explanation and action
TMPLTIDX		Valid name datafilled in table CDRTMPLT	TEMPLATE INDEX. When SOC option UBFR0001 is enabled, you can use table CDRTMPLT to create new CDR template. For more information on CDR templates, see *UCS DMS-250 Billing Records Application Guide.*
USEEDIT		N or Y	USE EDIT. Enter N to use the active version of the CDR template. Y indicates that the edit version is used. ***Note:*** This field is used for testing purposes only. It should be set to N, which is the default.

OPTION=JIP

The Jurisdiction Information Parameter (JIP) option in table TRKGRP allows a default JIP to be specified for a trunk group when a JIP is not received in the incoming call. The JIP parameter carries geographic and service provider information that is associated with the calling party. The JIP parameter also contains the originating switch's LRN (Local Routing Number).

When OPTION=JIP, datafill the COUNT, TWO_DIGS, and EIGHT_DIGS refinements.

Refinement	Subfield or refinement	Entry	Explanation and action
COUNT		SIX or TEN	COUNT. Enter SIX or TEN to specify the number of digits in the JIP.
TWO_DIGS		N, 0 to 9, B, C, D, E, F	TWO_DIGS. Enter two digits of the following characters: N, 0, 1, 2, 3, 4, 5, 6, 7, 8, 9, B, C, D, E, F.
EIGHT_DIGS		N, 0 to 9, B, C, D, E, F	EIGHT_DIGS. Enter eight digits of the following characters: N, 0, 1, 2, 3, 4, 5, 6, 7, 8, 9, B, C, D, E, F.

Listed below is an example of datafilling a ten digit JIP.

TRKGRP (DAL trunk group type) (continued)

> Enter the following values for the JIP option fields:

- COUNT: TEN

- TWO_DIGS: 89

- EIGHT_DIGS: 01234567

This example datafill would send a JIP of “0123456789” when establishing a terminating connection. The TWO_DIGS are appended at the end of the EIGHT_DIGS.

‘N’, ‘B’, ‘C’, ‘D’, ‘E’, or ‘F’ can be datafilled in either of the TWO_DIGS or EIGHT_DIGS fields. Table control displays these digits as ‘0’. However, when used in establishing the terminating connection, it is sent as follows:

Datafilled Digit	Digit Set To The Terminating Party
N	0
B	D
C	E
D	D
E	E
F	F

When adding a complete tuple in table TRKGRP in non-prompt mode, ‘JIP’ followed by a ten digit number can be entered. Below are example CI commands for adding a tuple with a JIP of ‘0123456789’:

```
> ADD DAL251TWDTLS DAL 3- NPDGP NCIT 0 2W DAL MIDL 16 7 16 16 S +
> 7 NIL ID 7 7 111 +
> MANUAL 214 0 NOAUTHS NON 0 3_1KHZ Y 1 N Y NONE 00 160 JIP 0123456789
```

Listed below is an example of datafilling a six digit JIP.

> Enter the following values for the JIP option fields:

- COUNT: SIX

- TWO_DIGS: 89

TRKGRP (DAL trunk group type) (continued)

- EIGHT_DIGS: 12345678

This example datafill would send a JIP of “123456” when establishing a terminating connection. The TWO_DIGS as well as the last two digits of the EIGHT_DIGS are discarded. Only the first six digits of the EIGHT_DIGS field are used.

‘N’, ‘B’, ‘C’, ‘D’, ‘E’, or ‘F’ can be datafilled in either of the TWO_DIGS or EIGHT_DIGS fields. The table control displays these digits as ‘0’. However, when used in establishing the terminating connection, it is sent as follows:

Datafilled Digit	Digit Set To The Terminating Party
N	0
B	D
C	E
D	D
E	E
F	F

When adding a complete tuple in table TRKGRP in non-prompt mode, ‘JIP’ followed by a six digit number can be entered. Below are example CI commands for adding a tuple with a JIP of ‘123456’:

```
> ADD DAL251TWDTLS DAL 3_NPDGP NCIT 0 2W DAL MIDL 16 7 16 16 S +
> 7 NIL ID 7 7 111 +
> MANUAL 214 0 NOAUTHS NON 0 3_1KHZ Y 1 N Y NONE 00 160 JIP 123456
```

Datafill example for group type DAL

The following example shows datafill for trunk group type DAL.

TRKGRP (DAL trunk group type) (continued)

```
GRPKEY GRPTYP TRAFSNO PADGRP NCCLS GRPINFO
_____________________________________________

DAL232TWDPLS DAL 127 NPDGP NCON 0 2W DAL MIDL 16 7 16 16 S 10 NIL DL
0 5 111 MANUAL 214 0 6112211 DIRECT 0 VOICE_DATA Y 1 N Y NONE 00 160
(OHQ ) (OHQTERM ) $

TIENX4ICDTDD DAL 127 NPDGP NCON 0 IC DAL MIDL 16 7 16 16 S 10 NIL ID
4 5 111 MANUAL 214 0 611 NONE 0 VOICE_DATA Y 1 N Y NONE 00 160 (OHQ )
(CONDHOTL ) $
```

Table History

UCS17

Added option JIP.

UCS14

Added option TRGPREFX for prefix indication. (A60008453).

UCS13

Added reserved options RSRV1, RSRV2, and RSRV3 for future use (A 60008223). Removed UCS07 and UCS07FLEX values from table OPTION=CDRTMPLT (A60007776).

UCS12

Updated information in GRPINFO field TSUSR subfield with correct timing value.

UCS11

The OPCHIDX field is updated. The maximum number of entries is expanded to 1023. (A60006449).

UCS09

The NETSEC option was updated to included ORIG_NETSEC, TERM_NETSEC, ORIG_PROFIDX and TERM_PROFIDX fields (AX0980). Added sub-options to CPIALLOW(AX0993). Added options CPN and LATA to the options vector (AX1247). Added options ANINPA to PANIVAL field and added PANIVAL field to the options vector (AX1247). Updated ACTPROMPT option field (AX0998).

TRKGRP (DAL trunk group type) (end)

UCS08

The CICSIZE, DEFCIC, JIP, TCAIN, and TCAINGRP options were added.

Supplementary information

If operating company personnel set the TCAINGRP option without setting the TCAIN option, the switch generates the following warning message:

```
WARNING: NO TRIGGERING WILL BE DONE FOR CALLS TERMINATING
ON THIS TRUNK GROUP IF TCAIN OPTION IS NOT DATAFILLED.
```

If operating company personnel set the CAINGRP option without setting the CAIN option, the switch generates the following warning message:

```
WARNING: NO TRIGGERING WILL BE DONE FOR CALLS ORIGINATING
ON THIS TRUNK GROUP IF CAIN OPTION IS NOT DATAFILLED.
```

TRKSGRP type DS0TL

DS0TL

Default datafill for digital jacks, if the JACK trunk group is datafilled in table TRKGRP, is supplied in subgroup 1. The default datafill is only provided if the optional subsystem DJACKSUB is present in the load. This default is supplied automatically.

The default data for analog jack trunks is supplied in subgroup 0.

Datafill

The following table lists the datafill for table TRKSGRP type DS0TL.

Field descriptions

Field	Subfield or refinement	Entry	Explanation and action
SGRPKEY		see subfields	*Subgroup key* This field consists of subfields CLLI and SGRP.
	CLLI	alphanumeric (1 to 16 characters)	*Common language location identifier* Enter the common language location identifier (CLLI) code that is assigned in table CLLI to the trunk group to which the subgroup belongs.
	SGRP	numeric (0 or 1)	*Subgroup number* Enter the number assigned to the trunk subgroup.
CARDCODE		DS0SIG	*Card code* Enter DS0SIG.
SGRPVAR		see subfield	*Variable subgroup data* This field consists of subfield SIGDATA.
	SIGDATA	DS0TL	*Signaling data* Enter DS0TL for the United Kingdom national variant of the Common Channel Signaling 7 (CCS7) ISDN user part (ISUP) type trunks.

Datafill example

An example of datafill for DS-0 transmission link signaling is shown below.

TRKSGRP type DS0TL (end)

MAP display example for table TRKSGRP type DS0TL

```
           SGRPKEY   CARDCODE
SGRPVAR
                                                  SGRPVAR
_____________________________________________________________


          DS0TLINK 0 DS0SIG
DS0TL
```

An example of datafill for digital jack trunks is shown below.

MAP display example for table TRKSGRP type DS0TL

```
           SGRPKEY   CARDCODE
SGRPVAR
                                                  SGRPVAR
_____________________________________________________________


         JACK 10 DS0SIG
DS0TL
```

TRKGRP type E911

Enhanced 911 Emergency Service Trunk Group Type

Trunk group type E911 (enhanced 911 emergency service) is used for dedicated 911 trunks that are incoming into a tandem office.

E911 type trunks support both multifrequency (MF) and dial-pulse (DP) signaling formats.

If office parameter E911_PSAPS_USING_1_INFO_DIGIT in table OFCSTD is set to Y (yes), datafill table E911NPD prior to datafilling field NPA in table TRKGRP for group type E911.

An emergency service number (ESN) datafilled in the E911 trunk group data must also be datafilled in table E911ESN.

Ensure that a default ESN for table TRKGRP and group type E911 is datafilled in table E911ESN. Otherwise, calls on this trunk group cannot be routed and are sent to vacant code treatment.

The maximum number of trunk subgroups that can be assigned is 4096.

Datafill

The following table lists the datafill for table TRKGRP type E911.

Field descriptions (Sheet 1 of 4)

Field	Subfield	Entry	Explanation and action
GRPKEY		see subfield	Group key. This field consists of subfield CLLI.
	CLLI	alphanumeric (1 to 16 characters)	Common language location identifier (CLLI). Enter the CLLI code assigned to the trunk group in table CLLI.
GRPINFO		see subfields	Variable group data. This field consists of subfields GRPTYP, TRAFSNO, PADGRP, NCCLS, SNPA, ECPHTIME, ORIGHOLD, SDATA, ANISEIZ, ANIPDIAL, ANIREQSG, ESCO, ESN, EXTSIG, and PRTNM. Refer to section “General field information" in table TRKGRP for information concerning an alternate structure for this field that results from the datafill of table CUSTFLDS.
	GRPTYP	E911	Group type. Enter E911 to specify the group type for enhanced 911 emergency service.

TRKGRP type E911 (continued)

Field descriptions (Sheet 2 of 4)

Field	Subfield	Entry	Explanation and action
	TRAFSNO	numeric(0 to 127)	Traffic separation number. Enter the incoming and outgoing traffic separation number assigned to the trunk group. If a traffic separation number is not required, enter 0 (zero). For switches with software package NTX085AA (Traffic Separation Peg Count), enter a value from 1 to the value of office parameter TFAN_OUT_MAX_NUMBER in table OFCENG. For switches without software package NTX085AA, enter a value from 1 to 15. Incoming and outgoing traffic separation numbers 1 to 9 should be reserved for generic traffic separation numbers. For more information, refer to table TFANINT.
	PADGRP	alphanumeric (1 to 5 characters)	Pad group. Enter the name of the pad group assigned to the trunk group in table PADDATA. For more information, refer to table PADDATA.
	NCCLS	NCRT	Operational measurements no circuit class. This field is not required for incoming trunk groups. Enter NCRT (no circuit).
	PRTNM	Vector up to eight characters	Pretranslator name. To activate this option, enter the value in table STDPRTCT. Then enter the data for field PRTNM in table TRKGRP for the E911 MF trunk with that value. The default datafill for an E911 MF trunk is NPRT (nil pretranslator).
	SNPA	numeric (5 digits)	Serving numbering plan area. Enter the serving NPA of the E911 trunk group that has a numbering plan digit (NPD) datafilled in table E911NPD.
	ECPHTIME	numeric(0 to 255)	Enhanced called party hold (ECPH) time. This entry indicates the number of seconds ECPH is active. In NA013, ECPH time is available for intertoll (IT) ISDN user part (ISUP) trunks with the E911 option.

TRKGRP type E911 (continued)

Field descriptions (Sheet 3 of 4)

Field	Subfield	Entry	Explanation and action
	ORIGHOLD	Y or N	Originator hold. Enter Y (yes) if the end office at which this trunk originated supports the operator hold function. Otherwise, enter N (no). In NA013, originator hold is available for IT ISUP trunks with the E911 option.
	SDATA	see subfield	Signaling data. This field consists of subfield SIGFMT and refinements.
	SIGFMT	AMR4 AMR5orBELL	Signaling format. Enter the format of the automatic number identification (ANI) information that is incoming on the trunk. If the format type is AMR4, enter AMR4 and datafill refinement NCATDIGS. If the format type is AMR5, enter AMR5 and datafill refinement NCATDIGS. If the format type is BELL, enter BELL and datafill refinement INFODIGS.
	NCATDIGS	numeric (2 or 3)	Number of category digits. Datafill this field if the value in field SIGMT is AMR4 or AMR5. Enter the number of category digits expected along with the ANI.
	INFODIGS	numeric (1 or 2)	Information digits. Datafill this field if the value in field SIGMT is BELL. Enter the number of information digits expected along with the ANI.
	ANISEIZ	numeric (2 to 30)	ANI seizure timing. Enter the time, in seconds, that the trunk waits for reception of the first ANI digit or signal after the ANI request signal.
	ANIPDIAL	numeric (2 to 30)	ANI partial dial timing. Enter the time, in seconds, that the trunk waits for reception of each ANI digit or signal after the first digit.

Field descriptions (Sheet 4 of 4)

Field	Subfield	Entry	Explanation and action
	ANIREQSG	REV or WK	ANI request signal. Enter REV to specify that a reversal signal is used to request ANI information. This entry value is used for multifrequency or dial pulse signaling. Enter WK to specify that a wink signal is used to request ANI information. This entry value is used for public safety answering point (PSAP) signaling.
	ESCO	numeric (000 to 999)	Emergency service central office. Enter the number representing the end office at which the E911 trunk originated.
	ESN	numeric (000 to 15999)	Emergency service number. Enter the number associated with the emergency service zone (ESZ). This number is used to obtain the directory number (DN) of the primary PSAP to which the call is routed by default.
	EXTSIG	Y or N	Extended signaling. Enter Y to specify that the trunk uses the extended signaling protocol. Enter N to turn off this option.
	ACKWINK	Y or N	Acknowledgment wink. Enter Y to receive an ACKWINK on incoming wireless calls over MF trunks to the E911 tandem. The E911 tandem receives the ACKWINK after receiving digits. The default setting is N. To change the ACKWINK field to Y, set the EXTSIG field to Y.

Datafill example

The following example shows sample datafill for table TRKGRP type E911.

MAP display example for table TRKGRP type E911

```
GRPKEY                                                    GRPINFO
_____________________________________________________________________

E911WRLS    E911 20 ELO NCRT NPRT 613 123 Y BELL 2 10 10 REV 849 321 Y
            $
E911ICMF    E911 20 ELO NCRT P621 613 0 Y BELL 1 10 10 REV 692 111
            N N $
E911ICNG    E911 0  ELO NCRT P621 613 123 Y AMR4 3 10 10 REV 847 005 N
            $
```

TRKGRP type E911 (end)

Table history

NA013

Added subfields ECPHTIME and ORIGHOLD to IT ISUP trunk functionality.

Added subfield ACKWINK.

NA011

Added subfield PRTNM.

NA010

Added subfield EXTSIG.

NA007

Subfield ECPHTIME option activated.

NA006

Added field ECPHTIME (currently an inactive option).

BCS36

Field DIRECTSZ was removed and replaced by field ANIREQSG.

TRKGRP (EANT trunk group type)

Table name

TRKGRP (EANT trunk group type) table

Functional description

Equal Access Network Trunks (EANT) or Feature Group D (FGD) allows connection of the switch to the trunk side of a Bell Equal Access End Office (EAEO) or a Class 4/5 Access Tandem office. The EAEO arrangement allows the switch access only to those phones directly connected to offices that are directly connected to the Access Tandem office.

Field descriptions

The following table describes field names, subfield names, and valid data ranges for table TRKGRP (EANT trunk group type).

Note: For the following entries, it is recommended that outgoing traffic separation numbers 1 through 9 be reserved for generic traffic separation numbers.

Name of table

Field	Subfield or refinement	Entry	Explanation and action
GRPKEY		Valid CLLI datafilled in table CLLI	GROUP KEY. Enter the CLLI names used to identify the EANT trunk group type.
GRPTYP		EANT	GROUP TYPE. Enter the trunk group type EANT.

TRKGRP (EANT trunk group type) (continued)

Name of table

Field	Subfield or refinement	Entry	Explanation and action
TRAFSNO		0 to 127	TRAFFIC SEPARATION NUMBER. Select entry as follows: • If the switch has the optional traffic separation software, enter the outgoing traffic separation number assigned to intersection,1-127. • If traffic separation is not required, enter 0. • If the switch has software package that includes the Traffic Separation Peg Count feature package, the range of values for the outgoing traffic separation numbers is dependent upon parameter TFAN_OUT_MAX_NUMBER in the OFCENG table. • For a switch without the Traffic Separation Peg Count feature package, the range of values for the traffic separation numbers is 0-15. Further information concerning traffic separation numbers can be found in table TFANINT.
PADGRP		NPDGP or valid pad group defined in table PADDATA	PAD GROUP. Enter the pad group name if pad groups are defined in table PADDATA. Enter NPDGP (fixed loss plan) if no pad group is required.

TRKGRP (EANT trunk group type) (continued)

Name of table

Field	Subfield or refinement	Entry	Explanation and action
NCCLS		NCRT, NCTC, NCLT, NOSC, NCBN, NCID, NCOT, NCIT, NCIM, NCON, NCOF	NO CIRCUIT CLASS TYPE. Upon exhausting the route list, No Circuit on-net Trunk (NCON) defines the No Circuit Class OM (in group OFZ2) to peg when group is the last element in the route list. Enter one of the following types: • NCRT=no circuit • NCTC=no circuit toll completing trunk • NCLT=no circuit local tandem trunk • NOSC=no circuit service circuit trunk • NCBN=no circuit business network trunk • NCID=no circuit inward dial • NCOT=no circuit other trunk • NCIT=no circuit intertoll trunk • NCIM=no circuit intermachine trunk • NCON=no circuit on-network trunk • NCOF=no circuit off-network trunk
GRPINFO			GROUP INFORMATION. Datafill the EANT trunk group type refinements.
	COS	0 to 119	CLASS OF SERVICE. Enter the class of service code that is used in screening the calls.
	DIR	IC, OG, or 2W	DIRECTION. Enter IC (incoming), OG (outgoing) or 2W (two-way) to define the direction of traffic flow.

TRKGRP (EANT trunk group type) (continued)

Name of table

Field	Subfield or refinement	Entry	Explanation and action
	PRTNM	NPRT or valid pretranslator datafilled in table STDPRTCT	STANDARD PRETRANSLATOR TABLE NAME. Enter a four-pretranslator name, if standard pretranslation is required. Enter NPRT for no pretranslation. ***Note:*** Datafill the STANDARD PRETRANSLATOR TABLE NAME in table STDPRTCT.
	SELSEQ	LIDL, MIDL, ASEQ, DSEQ, CWCTH, CCWCTH, WIDEBAND	SELECT SEQUENCE. Enter one of the following: LIDL, MIDL, ASEQ, DSEQ, CWCTH, CCWTH, CCWCTH, or WIDEBAND. Enter Least Idle (LIDL) to use a two-way trunk group with a far-end link list switch with most idle select sequence. Enter most idle (MIDL) to use a two-way trunk group with a far-end link switch with least idle select sequence, or to use a far end is not a link list switch, or to determine whether a trunk group direction is incoming or outgoing. Enter ascending sequence (ASEQ) to use a trunk group member immediately following the last trunk member chosen. Enter descending sequence (DSEQ) to select a trunk group member. Immediately preceding a trunk group member in use, is the next trunk member chosen.

TRKGRP (EANT trunk group type) (continued)

Name of table

Field	Subfield or refinement	Entry	Explanation and action
			Enter clockwise circular trunk hunting (CWCTH) to start a clockwise, circular search of the route list starting at the most recently released (MRR) trunk. The MRR reference point changes constantly. The search selects the first idle trunk. Enter counterclockwise circular trunk hunting (CCWCTH) to start a counterclockwise, circular search of the route list starting at the MRR trunk. The search selects the first idle trunk. Enter WIDEBAND to allow the agent to handle wideband calls. Only new trunk groups may specify wideband. Refer to the SELSEQ=WIDEBAND section for refinement datafill of the WBSELSEQ, WBGRPING, and WBSEARCH refinements.
	ODSCFLTR	5 to 255	ORIGINATING DISCONNECT FILTER. Enter the minimum amount of time in ten-millisecond increments. The switch observes a sustained on-hook (disconnect) signal during the ten-millisecond period from the originating central office before declaring disconnect.
	ORIGFLTR	5 to 255	ORIGINATION FILTER. Enter the minimum amount of time in ten-millisecond increments. The switch observes origination (ground on tip conductor) from a central office during this ten-millisecond period before declaring origination.

TRKGRP (EANT trunk group type) (continued)

Name of table

Field	Subfield or refinement	Entry	Explanation and action
	TDSCFLTR	5 to 255	TERMINATING DISCONNECT FILTER. Enter the minimum amount of time in ten-millisecond increments. The switch observes on-hook for this ten-millisecond period before declaring disconnect.
	ANSWFLTR	5 to 255	ANSWER FILTER. Specify the minimum amount of time in ten-millisecond increments. The switch observes answer for this ten-millisecond period before the switch declares answer. Monitoring the following allows detection of a hardware answer: • A or A- and B-bit values received from terminator for tie trunk • loop start foreign exchange station (FXS) • ground start FXS interfaces
	IDPRTRAN	NPRT or valid pretranslator datafilled in table STDPRTCT	ID DIGIT PRETRANSLATOR TABLE NAME. Enter the ID digit pretranslator name to use for incoming or two-way trunk groups. Enter NPRT for outgoing trunk groups.
	SNDRPSIG	2 to 30	SENDERIZED PERMANENT SIGNAL. Enter the permanent signal timing in seconds for senderized UAC and ANI digits on ENFIA B and C trunks.
	SNDRPDIL	2 to 30	SENDERIZED PARTIAL DIAL. Enter the partial dial time in seconds. Use this time for senderized UAC and ANI digits on ENFIA B and C trunks.

TRKGRP (EANT trunk group type) (continued)

Name of table

Field	Subfield or refinement	Entry	Explanation and action
	SNPA	000 to 999	SERVING NUMBERING PLAN. Enter the digits to prefix when a local subscriber dials a local, seven-digit number and an NPA prefix is required for outpulsing. This situation could occur if the operating company uses code type LRTE in the HNPACODE table.

TRKGRP (EANT trunk group type) (continued)

Name of table

Field	Subfield or refinement	Entry	Explanation and action
	ISUPIDX	NILIDX, UCS2USP, UCS2EAEO, USP2USP, UCS2DEX8, UCS2UCS, USP2UCS, UCS2MCI, UCS2AT, UCS2IXC	ISDN USER PART INDEX. This field specifies the interworking between the different network domains. NILIDX-ISUP calls cannot go through with NILIDX datafilled. This field is used for non-ISUP trunks. • UCS2USP-ISUP between a UCS DMS-250 switch and a USSPRINT DMS-250 switch • UCS2EAEO-ISUP between a UCS DMS-250 switch and an Equal Access End Office of an LEC • USP2USP-ISUP between two USSPRINT DMS-250 switches • UCS2DEX8-ISUP between a UCS DMS-250 switch and a DCS DEX switch • UCS2UCS-ISUP between two UCS DMS-250 switches • USP2UCS-ISUP between a USSPRINT switch and a UCS DMS-250 switch • UCS2MCI-ISUP between a UCS DMS-250 switch and an MCI switch • UCS2IXC-ISUP between a UCS DMS-250 switch and an IXC switch • UCS2AT-ISUP between a UCS DMS-250 switch and an AT&T switch

TRKGRP (EANT trunk group type) (continued)

Name of table

Field	Subfield or refinement	Entry	Explanation and action
	TRAFCLS	NIL, LINE, INTERCEPT, REPAIR, XX, IR, CA, DD, IA, IE, IT, LW, MN, MT, OA, RC, SP, TC, TE, TG, TM, TO, TS, TT, TW, AL, AN, CB, CD, CP, CS, DA, DS, IN, MA, MB, NT, OF, OW, PS, RR, RS, SC, SO, TA, TI, TK, TP, VC, VR, WE, MI, ON, BL, IM, OT, DL, DB, ID	TRAFFIC CLASS. Enter the traffic usage class where the trunk group is assigned. This field is not used by UCS DMS-250 switch software, but is provided for the convenience of operating companies who wish to associate their own traffic class code with each trunk group.
	CONNGNPA	000 to 999	CONNECTING NPA. Enter the three-digit, primary, terminating NPA when the trunk group is outgoing or two-way. Enter NIL for incoming trunk groups.
	OPART	0 to 999	ORIGINATING PARTITION. Enter the originating partition number associated with the trunk group to be translated to a serving translation scheme for region code screening.

TRKGRP (EANT trunk group type) (continued)

Name of table

Field	Subfield or refinement	Entry	Explanation and action
	RECALLDT	AUTO, MANUAL, NONE	RECALL DIALTONE. Enter one of the following: • AUTO. Allows subscriber to receive dialtone automatically after the initial called party disconnect or upon completion of a treatment. • MANUAL. Allows subscriber to reoriginate dialtone by dialing an octothorpe (#) or an asterisk (*). • NONE. Indicates neither MANUAL nor AUTO recall dialtone is used. NONE is the default.
	TIMEBIAS	-12 to 12	TIMEBIAS. Enter the time difference between the time zones of the originating trunk group and the UCS DMS-250 switch in one-hour increments. This shows the subscriber's true origination time; which is needed to apply the restricted usage by date and time feature. For example, if a call originates in California and enters the UCS DMS-250 switch in Texas, the TIMEBIAS is -2 hours. Enter 0 if there is no time zone difference.
	ZEROMPOS	NONE, or valid position datafilled in table POSITION	ZERO MINUS POSITION. Enter the type of position from table POSITION used to route Zero Minus (0-) calls on this trunk group. Enter NONE if 0- calls are not routed on this trunk group.

TRKGRP (EANT trunk group type) (continued)

Name of table

Field	Subfield or refinement	Entry	Explanation and action
	ZONE	0 to 9, A, B, C, AUTO	ZONE. Enter a zone type number. Use this field to calculate whether looparound IMTs with echo canceller are needed. To calculate this need for such IMTs, add the ZONE number assigned to the originating trunk group to the ZONE number assigned to the first choice in the terminating route list.
	ADIN	0 to 99	AUTHORIZATION CODE DATABASE IDENTIFICATION NUMBER. Enter the value that indexes into the authcode database (from 0, the default, to 99).
	BCNAME	Valid BC datafilled in table BCDEF	BEARER CAPABILITY NAME. Enter any value previously defined in table BCDEF. This field contains the bearer capability name be associated with the trunk.
	TSUSR	0 to 254	TRUNK GROUP SUSPEND/RESUME TIMER. Enter the timing value used for suspend timing. Range of values for TSUSR is 0 to 254, in 100-ms (.1-second) increments. The default is 160 (16 seconds). The total value of the timer is 0 to 25.4 seconds. When this option is not datafilled or is datafilled to 0, no suspend timing is done and the SUSPEND is treated as a RELEASE.
	OPTION		OPTION. Datafill this field to specify optional features. Enter up to 52 options.
		NIL	NIL. Enter NIL to remove an option.

TRKGRP (EANT trunk group type) (continued)

Name of table

Field	Subfield or refinement	Entry	Explanation and action
		MCCS	MECHANIZED CALLING CARD SERVICE. This option is not datafillable when the Basic Calling Card Services option is set to IDLE. When the option is ON, option MCCS is datafillable. The ON to IDLE transition requires that the datafill in this option be removed.
		OHQ	OFFHOOK QUEUING. Enter OHQ if incoming calls from this trunk group are allowed to utilize the off-hook queuing capability on a terminating trunk group. Otherwise, omit.
		OHQTERM	TERMINATING OFFHOOK QUEUING. Enter OHQTERM if calls terminating on this trunk group are offered off-hook queuing. Otherwise, omit.
		IEXCLINX	INCOMING EXCLUSION INDEX. Enter the IEXCLINX option when the trunk group is incoming or two-way. Refer to the OPTION=IEXCLINX section for refinement datafill.
		VPNSIX	VIRTUAL PRIVATE NETWORK SIX DIGIT DIALING. Enter VPNSIX to enable 6-digit dialing for VPN services. Omit VPNSIX to disable.
		ALTTRTMT	ALTERNATE TREATMENTS. Enter ALTTRMT if calls originating on this trunk group use the ALTERNAT subtable within the TMTCNTL table when routing to a treatment.

TRKGRP (EANT trunk group type) (continued)

Name of table

Field	Subfield or refinement	Entry	Explanation and action
		COSOVE	CLASS OF SERVICE OVERRIDE INDICATOR. Enter COSOVE to activate the Class of Service Override feature. Omit COSOVE to disable.
		SCRNCL	SCREEN CLASS. Currently not used.
		CASUALU	CASUAL USER. Enter CASUALU to enable casual user processing, which routes a call to treatment or allows the call to proceed without features on this FGD trunk group. Omit CASUALU to disable.
		ANIDIGS	AUTOMATIC NUMBER IDENTIFICATION DIGITS. Enter ANIDIGS if ANI digits are required.
		UATONE	UNIVERSAL ACCESS TONE. The Universal Access Tone is used to determine if a tone to pulse converter disable tone is sent by the Operating Company to the subscriber prior to returning dial tone. Enter UATONE to receive UA tone followed by dialtone.
		SNCDED	SOFTWARE NETWORK CONTROL DEDICATED EANT. Enter SNCDED if trunk is dedicated only to SNC traffic. Omit SNCDED to disable.
		DIRECTEO	DIRECT END OFFICE. Enter DIRECTEO if Direct End Office protocol is expected on the EANT trunk. Omit DIRECTEO to disable.

TRKGRP (EANT trunk group type) (continued)

Name of table

Field	Subfield or refinement	Entry	Explanation and action
		TMANIDLV	TERMINATING ANI DELIVERY. Enter the TMANIDLV option to control ANI delivery on SS7-FGD or PTS-FGD terminations. ***Note:*** For ANI delivery on PTS-FGD trunks, set the MLTISTAGE field (for the terminating trunk group in table TRKGRP1) to Y. Refer to the OPTION=TMANIDLV section for refinement datafill.
		REORGVAL	REORIGINATION VALIDATION. Enter REORGVAL to enable revalidation of a reoriginated calling card call. Omit REORGVAL to disable.
		VARDIAL	VARIABLE LENGTH DIALING PLAN. Enter VARDIAL to enable variable length customer dialing. Omit VARDIAL to disable.
		ENHANSUP	ENHANCED ANSWER SUPERVISION. Enter ENHANSUP to define if call duration timing starts when the terminating party provides an answer signal (off-hook, answer messages, or connect), or when the terminator sends an EOP, progress/alert, or address complete message (depending on the terminator's signaling type).
		CTRUAUTH	CUT THRU AUTHCODE. When the CTRUAUTH option is selected, FGD cut-through calls require an Authcode and generates a PANI which overrides the ANI.
		PANIVAL	PSEUDO ANI VALUE. Enter PANIVAL to set the PANI format. Refer to the OPTION=PANIVAL section for refinement datafill.

TRKGRP (EANT trunk group type) (continued)

Name of table

Field	Subfield or refinement	Entry	Explanation and action
		OPNOAUTH	OPERATOR NO AUTHCODE. Activate the OPNOAUTH feature when an authcode is not required for 0-, 0+, or 01+ calls.
		VANIDB	VERIFY IN ANI DATABASE. ANI database failure treatment (ADBF) is given to PANI and FGD cut-through calls that fail screening in table ANISCUSP.
		ID24_ON	ID24_ON screens for ID number 24 for all incoming calls on trunks SS7 FGD, PTS FGD, and SS7 IMT.
		BLOCKNB	Currently not applicable.
		CAIN	CARRIER ADVANCED INTELLIGENT NETWORK. Enter CAIN to indicate the originating agent is capable of using CAIN services.
		CAINGRP	CAIN GROUP. Enter CAINGRP to specify a CAIN subscription group for the originating agency. Refer to the OPTION=CAINGRP section for refinement datafill.
		CICRTE	CIC ROUTING. If this option is set, translations and routing are based on the CIC received on the originating trunk (using table CICROUTE). If not set, CIC-based translations and routing are not performed.
		TMCICBLK	TERMINATING TRUNK CIC BLOCKING. Enter TMCICBLK to specify that CIC is to be blocked for calls on SS7-FGD, SS7-IMT, or MF-FGD trunks. Enter datafill for the TMCICBLK refinement.

TRKGRP (EANT trunk group type) (continued)

Name of table

Field	Subfield or refinement	Entry	Explanation and action
	TMCICBLK	BLK_CIP, BLK_TNS, BLK_BOTH	Enter one of the following refinements for TMCICBLK: • BLK_CIP. Enter BLK_CIP for SS7 trunks to block the delivery of the CIP parameter, or for PTS trunks to block delivery of the CIC for national calls. • BLK_TNS. Enter BLK_TNS for SS7 trunks to block the delivery of the TNS parameter, or for PTS trunks to block delivery of the CIC for international calls. • BLK_BOTH. Enter BLK_BOTH for PTS and SS7 trunks to block delivery of the CIC.
		DEFCIC	DEFAULT CARRIER IDENTIFICATION CODE ROUTING. If this option is set, translations and routing are based on the default CIC. Refer to section OPTION=DEFCIC for refinement datafill.
		CICSIZE	CARRIER IDENTIFICATION CODE SIZE. If CICSIZE is not specified for a trunk, a size of 3DIGS is used for the call. Enter datafill for the SIZE refinement.
	SIZE	3DIGS, 4DIGS	SIZE. Enter the value of 3DIGS or 4DIGS to specify either a 3-digit or 4-digit CIC.
		OUTCIC	OUTPULSE CARRIER IDENTIFICATION CODE. If OVERRIDE is set, then the OUTCIC CICDIGS value is outpulsed. Refer to section OPTION=OUTCIC for refinement datafill. ***Note:*** This option is not available on DAL, FGA, FGB, FGC trunks.

TRKGRP (EANT trunk group type) (continued)

Name of table

Field	Subfield or refinement	Entry	Explanation and action
		ANIBYP	AUTOMATIC NUMBER IDENTIFICATION BYPASS. When this option is set on the switch, for originating or two-way FGD trunk groups, the ANI screening table ANISCUSP is bypassed.
		VPROMPTS	VOICE PROMPT CALL. Set this option to trigger voice prompting for MCCS calls.
		NETSEC	NETWORK SECURITY. When this option is set on the switch, the switch generates a NETS601 log report for two cases: • When answer is detected at the terminating end of an international call • When answer is detected on a World Zone One call to an NPA datafilled in table WZONE
	ORIG_NETSEC	Y or N	Enter Y to enable NETSEC functionality on origination and datafill the profile index refinement. If ORIG_NETSEC is set to N, the NETSEC functionality is disabled on origination and the corresponding profile index is not used during call processing.
	ORIG_PROFIDX	0 to 255	Enter value range from 0 to 255 for origination profile index.
	TERM_NETSEC	Y or N	Enter Y to enable NETSEC functionality on termination and datafill the profile index refinement. If TERM_NETSEC is set to N, the NETSEC functionality is disabled on termination and the corresponding profile index is not used during call processing.

TRKGRP (EANT trunk group type) (continued)

Name of table

Field	Subfield or refinement	Entry	Explanation and action
	TERM_PROFIDX	0 to 255	Enter value range from 0 to 255 for termination profile index
		STRMBGDP	STROMBERG DIAL PLAN. Enter STRMBGDP to change the dialing plan to allow a seven-digit authorization code to be followed by an optional account code and the address digits. This plan is available for transitional, UA, and cut-thru calls. The dialing plan is AUTHCODE + (optional PROMPT) + optional ACCT + (optional PROMPT) + ADDR ***Note 1:*** Enable the optional prompt prior to account code collection by datafilling the ACPROMPT option. ***Note 2:*** Enable the optional prompt prior to address collection by datafilling the PINADDRP refinement (table TRKGRP1) to Y.
		OPCHOICE	OPCHOICE. When this option is set, datafill the OPCHIDX refinement. Refer to the OPTION=OPCHOICE for refinement datafill.
		CDRTMPLT	CDR TEMPLATE. Use this option to define a template for formatting CDRs. Refer to the OPTION=CDRTMPLT section for refinement datafill.
		CASU_CUT_THRU	CASUAL CUT THRU. When this option is set, originating cut-thru calls with a casual ANI enable the FGD passthru feature and route by office parameter FGD_CUTTHRU_PASSTHRU.

TRKGRP (EANT trunk group type) (continued)

Name of table

Field	Subfield or refinement	Entry	Explanation and action
		ANSWRPVD	ANSWRPVD. Set this option to allow an early answer indication for UA calls on the provisioned originating trunk group. ***Note:*** Option ANSWRPVD is supported only for the SS7 protocol (SGRPVAR=C7UP in table TRKSGRP).
		JIP	JURISDICTION INFORMATION PARAMETER. Enter JIP to specify a JIP for a call when one is not available from the incoming call. Refer to section OPTION=JIP for refinement datafill.
		TCAIN	TERMINATING CAIN. Enter TCAIN to indicate that the trunk group is AIN capable when the trunk is the terminating agent. This option must be set in order for the trunk group to trigger on any AIN events related to the Terminating Call Model. This option must also be turned on for triggering on an Office basis.
		TCAINGRP	TERMINATING CAIN GROUP. Enter TCAINGRP to specify the terminating CAIN group for the trunk group. Enter datafill for the CAINGRP refinement.
	CAINGRP	valid CAINGRP	CAIN GROUP. Enter a valid CAINGRP from table CAINGRP.
		UAANISCR	When this option is datafilled against the originating FGD trunk, UA MCCS calls made on this trunk screen the received ANI.
		LATA	LOCAL ACCESS TRANSPORT AREA. Datafill the LATAID and LATA_IDX refinement.

TRKGRP (EANT trunk group type) (continued)

Name of table

Field	Subfield or refinement	Entry	Explanation and action
	LATAID_IDX	Valid index into table LATAID, NILLLATA	Enter a valid index or enter NILLLATA. If NILLLATA is provisioned then the OPTION does not display and no error message is generated.
		ENFNPAOP	The ENFNPAOP is not provisioned with additional field information. Entering this value prompts you for other option values.
		AMAREC	The AMAREC option is used to designate the call code assigned for calls originating on or terminating to the specified trunk. See ORIGACC, TERMACC, and ORGSAREC refinements.
	ORIGACC	NIL, CC110, CC117	The ORIGACC field designates the call code to be applied for all calls terminating on the trunk. Enter one of the following: • NIL • CC110. Call code 110 is assigned for InterLATA station paid trunks. • CC117. Call code 117 is assigned for InterLATA PSDS (public switched digital service) trunks.
	TERMACC	NIL, CC119, CC720	The TERMACC field specifies the call code for all incoming calls.

TRKGRP (EANT trunk group type) (continued)

Name of table

Field	Subfield or refinement	Entry	Explanation and action
	ORGSAREC	NIL, ORGSAREC	The ORGSAREC datafill indicates that the originating switch is a Switched Access switch. If call is Default routed, Structure Code 00001 and Call Code 060 is generated in the AMA billing records. If call is upchained by receiving an Analyze Route message from SCP, Structure Code 00001 and Call Code 342 is used.
	ACCESSID	0 TO 255	ACCESSID.AccessID is an integer value that is required to provide correct AMA billing information for calls originating on these trunks. Default value is 0.
	TRN	0-9999999999	TRN. Trunk Rating Number is an integer value that is required to provide correct AMA billing information for calls originating on these trunks. It is to be provisioned for a number containing up to 10 digits. Default value is 0. Refer to section OPTION=TRN for refinement datafill.
	LDCUST	Y or N	LDCUST is an integer value that is required to provide correct AMA billing information for calls originating on these trunks. If option is present in TRKGRP datafill for a given trunk, it indicates a Y value. If option not present, it indicates a N value.

TRKGRP (EANT trunk group type) (continued)

SELSEQ=WIDEBAND

When SELSEQ=WIDEBAND, datafill the WBSELSEQ, WBGRPING, and WBSEARCH refinements.

Field descriptions

Refinement	Subfield or refinement	Entry	Explanation and action
WBSELSEQ			WIDEBAND SELECTION SEQUENCE. Enter ASEQ or DSEQ to define how the switch locates an idle wideband trunk for call termination. ***Note:*** Nortel recommends setting ASEQ at one end of the trunk and DSEQ at the other end to inhibit the occurrence of glare. Glare is the simultaneous seizure of a trunk by switches at each end.
		ASEQ	ASCENDING SEQUENCE. Enter ASEQ to indicate that the switch: • check first-defined DS1 span's lowest-numbered DS0 channel • search through the last-defined DS1 span's DS0s
		DSEQ	DESCENDING SEQUENCE. Enter DSEQ to indicate that the switch: • check last-defined T1 span's highest-numbered DS0 channel • search through the first-defined span's DS0s
WBGRPING			WIDEBAND GROUPING. Enter FIXED, FLEXIBLE, or FLOATING to describe the slot arrangement used in call processing.
		FIXED	Enter FIXED to indicate *n* consecutive channels on the DS1 span begin and end on exact boundaries (*n*=6 or *n*=24 for H0 and H11 calls only).
		FLEXIBLE	Enter FLEXIBLE to indicate that the slot arrangement begins at any DS0 channel on the DS1 span (*n*=2 to 24).

TRKGRP (EANT trunk group type) (continued)

Field descriptions

Refinement	Subfield or refinement	Entry	Explanation and action
		FLOATING	Enter FLOATING to indicate *n* consecutive channels on the DS1 span (*n*=2 to 24).
WBSEARCH			WIDEBAND SEARCH. Enter BESTFIT or FIRSTFIT to define how the switch locates a group of time slots.
		BESTFIT	Enter BESTFIT to reduce fragmentation by selecting the *n* channels according to a best fit, where the largest groups of contiguous channels remain available for large bandwidth calls. Nortel recommends using BESTFIT for 1-way trunks.
		FIRSTFIT	Enter FIRSTFIT to inhibit glare by selecting the first available *n* slot.

OPTION=IEXCLINX

When OPTION=IEXCLINX, datafill the IEXCLINX refinement.

Field descriptions

Refinement	Subfield or refinement	Entry	Explanation and action
IEXCLINX		0 to 255	INCOMING EXCLUSION INDEX. Enter a number between 0 and 255 to index into table IEXCLUDE. Table IEXCLUDE indicates NPAs and NXXs to block or allow.

TRKGRP (EANT trunk group type) (continued)

OPTION=TMANIDLV

When OPTION=TMANIDLV, datafill the TMANIDLV refinement.

Field descriptions

Refinement	Subfield or refinement	Entry	Explanation and action
TMANIDLV			TERMINATING ANI DELIVERY. Enter ALWAYS, NEVER, CPNONLY, or CGNONLY to indicate delivery.
		ALWAYS	Enter ALWAYS to deliver one of the following: • SS7-FGD terminations - deliver calling party number, charge number, and OLI • PTS-FGD terminations - deliver the ANI
		NEVER	Enter NEVER to disable ANI delivery.
		CPNONLY	Enter CPNONLY to deliver one of the following: • SS7-FGD terminations - deliver calling party number • PTS-FGD terminations - deliver the ANI
		CGNONLY	Enter CGNONLY to deliver one of the following: • SS7-FGD terminations - deliver charge number and OLI • PTS-FGD terminations - deliver the ANI

TRKGRP (EANT trunk group type) (continued)

OPTION=PANIVAL

When OPTION=PANIVAL, datafill the PANIVAL and CTRUPANI refinements.

Field descriptions

Refinement	Subfield or refinement	Entry	Explanation and action
PANIVAL			PANI VALUE. Enter one of the following PANI formats: AUTHANI, ANIPIN, ANISNPA, AUTHONLY. ***Note:*** Authorization codes and PINs are validated, but PANIs are not.
		AUTHANI	Entering AUTHANI selects the following formats: • seven-digit AUTHCODE + three-digit PIN - used when a partially- or fully-dialed authorization code and a filed three-digit PIN are available. • three-digit SNPA + seven-digit AUTHCODE - used when the PIN is not three-digits in length.
		ANIPIN	Enter ANIPIN to select the following format: seven-digit AUTHCODE + three-dig PIN
		ANISNPA	Enter ANISNPA to select the following format: three-digit SNPA + seven-digit AUTHCODE
		ANINPA	Entering ANINPA selects the following format: A 3-digit NPA

TRKGRP (EANT trunk group type) (continued)

Field descriptions

Refinement	Subfield or refinement	Entry	Explanation and action
		AUTHONLY	Entering AUTHONLY selects the following formats: seven-digit AUTHCODE + three-digit PIN - used when a partially- or fully-dialed authorization code and a filed three-digit PIN are available. three-digit SNPA + seven-digit AUTHCODE - used when the PIN is not three-digits in length.
CTRUPANI		Y or N	The value of this field is based on the value of field EOP50_ANI in table TRKGRP1. When EOP50_ANI=Y, CTRUPANI defaults to N. If EOP50_ANI is not present or is set to N, CTRUPANI defaults to Y.

OPTION=DEFCIC

When OPTION=DEFCIC, datafill the CIC, OUTPULSE, OPERRTE, ANIRTE, CAINCIC, and DFCICRTE refinements.

Refinement	Subfield or refinement	Entry	Explanation and action
CIC		0000 to 9999	CARRIER IDENTIFICATION CODE. Enter the default CIC digits to be outpulsed.
OUTPULSE		Y or N	OUTPULSE. Enter Y or N to use the default CIC for outpulsing.
OPERRTE		Y or N	OPERRTE. Enter Y or N to use the default CIC as an index into table OPERRTE.
ANIRTE		Y or N	AUTOMATIC NUMBER IDENTIFICATION ROUTING. Enter Y or N to use the default CIC during ANI screening. ***Note:*** SOC UTRS0200 must be on before this option is used for a call.

TRKGRP (EANT trunk group type) (continued)

Refinement	Subfield or refinement	Entry	Explanation and action
CAINCIC		Y or N	CARRIER ADVANCED INTELLIGENT NETWORK CARRIER IDENTIFICATION CODE. Enter Y or N to use the default CIC by CAIN in the Carrier Parameter of an outgoing TCAP query message and/or to use the default CIC for trigger table checking. ***Note:*** CAIN0100 SOC must be on before this option is used for a call.
DFCICRTE		Y or N	DEFAULT CARRIER IDENTIFICATION CODE ROUTING. Enter Y or N to use the default CIC as an index into table CICROUTE to allow CIC Routing. ***Note:*** SOC UTRS0001 must be on before this option is used for a call.

OPTION=OUTCIC

When OPTION=OUTCIC, datafill the CICDIGS and OVERRIDE refinements.

Refinement	Subfield or refinement	Entry	Explanation and action
CICDIGS		0000 to 9999	CARRIER IDENTIFICATION CODE DIGITS. Enter the CIC digits to be outpulsed.
OVERRIDE		Y or N	OVERRIDE. Enter Y or N to indicate if the OUTCIC CICDIGS value is outpulsed.

OPTION=OPCHOICE

When OPTION=OPCHOICE, datafill the OPCHIDX refinement.

Field descriptions

Refinement	Subfield or refinement	Entry	Explanation and action
OPCHIDX		0 to 1023	OPERATOR CHOICE INDEX. This index points to a tuple in table OPCHOICE.

TRKGRP (EANT trunk group type) (continued)

OPTION=CDRTMPLT

When OPTION=CDRTMPLT, datafill the TMPLTIDX and USEEDIT refinements.

Field descriptions

Refinement	Subfield or refinement	Entry	Explanation and action
TMPLTIDX		Valid name datafilled in table CDRTMPLT	TEMPLATE INDEX. When SOC option UBFR0001 is enabled, you can use table CDRTMPLT to create a new CDR template. For more information on CDR templates, see *UCS DMS-250 Billing Records Application Guide.*
USEEDIT		N or Y	USE EDIT. Enter N to use the active version of the CDR template. Y indicates that the most current edit version is used. ***Note:*** This field is used for testing purposes only. It should be set to N, which is the default.

OPTION=JIP

The Jurisdiction Information Parameter (JIP) option in table TRKGRP allows a default JIP to be specified for a trunk group when a JIP is not received in the incoming call. The JIP parameter carries geographic and service provider information that is associated with the calling party. The JIP parameter also contains the originating switch's LRN (Local Routing Number).

When OPTION=JIP, datafill the COUNT, TWO_DIGS, and EIGHT_DIGS refinements.

Refinement	Subfield or refinement	Entry	Explanation and action
COUNT		SIX or TEN	COUNT. Enter SIX or TEN to specify the number of digits in the JIP.
TWO_DIGS		N, 0 to 9, B, C, D, E, F	TWO_DIGS. Enter two digits of the following characters: N, 0, 1, 2, 3, 4, 5, 6, 7, 8, 9, B, C, D, E, F.
EIGHT_DIGS		N, 0 to 9, B, C, D, E, F	EIGHT_DIGS. Enter eight digits of the following characters: N, 0, 1, 2, 3, 4, 5, 6, 7, 8, 9, B, C, D, E, F.

TRKGRP (EANT trunk group type) (continued)

Listed below is an example of datafilling a ten digit JIP.

> Enter the following values for the JIP option fields:

- COUNT: TEN

- TWO_DIGS: 89

- EIGHT_DIGS: 01234567

This example datafill would send a JIP of “0123456789” when establishing a terminating connection. The TWO_DIGS are appended at the end of the EIGHT_DIGS.

‘N’, ‘B’, ‘C’, ‘D’, ‘E’, or ‘F’ can be datafilled in either of the TWO_DIGS or EIGHT_DIGS fields. Table control displays these digits as ‘0’. However, when used in establishing the terminating connection, it is sent as follows:

Datafilled Digit	Digit Set To The Terminating Party
N	0
B	D
C	E
D	D
E	E
F	F

When adding a complete tuple in table TRKGRP in non-prompt mode, ‘JIP’ followed by a ten digit number can be entered. Below are example CI commands for adding a tuple with a JIP of ‘0123456789’:

```
> ADD EAN8131C7DR02 EANT 50 NPDGP NCOF 0 2W EAN MIDL 16 7 16 16 +

> EAPT 4 214 UCSEAEO NIL 214 650 MANUAL 0 RTE622 0 1 +

> VOICE_DATA 160 JIP 0123456789
```

Listed below is an example of datafilling a six digit JIP.

> Enter the following values for the JIP option fields:

TRKGRP (EANT trunk group type) (continued)

- COUNT: SIX

- TWO_DIGS: 89

- EIGHT_DIGS: 12345678

This example datafill would send a JIP of “123456” when establishing a terminating connection. The TWO_DIGS as well as the last two digits of the EIGHT_DIGS are discarded. Only the first six digits of the EIGHT_DIGS field are used.

‘N’, ‘B’, ‘C’, ‘D’, ‘E’, or ‘F’ can be datafilled in either of the TWO_DIGS or EIGHT_DIGS fields. Table control displays these digits as ‘0’. However, when used in establishing the terminating connection, it is sent as follows:

Datafilled Digit	Digit Set To The Terminating Party
N	0
B	D
C	E
D	D
E	E
F	F

When adding a complete tuple in table TRKGRP in non-prompt mode, ‘JIP’ followed by a six digit number can be entered. Below are example CI commands for adding a tuple with a JIP of ‘123456’:

```
> ADD EAN8131C7DR02 EANT 50 NPDGP NCOF 0 2W EAN MIDL 16 7 16 16 +

> EAPT 4 214 UCSEAEO NIL 214650 MANUAL 0 RTE622 0 1 +

> VOICE_DATA 60 JIP 123456
```

Datafill example

The following example shows sample datafill for table TRKGRP (EANT trunk group type).

TRKGRP (EANT trunk group type) (continued)

MAP display example for table TRKGRP (EANT trunk group type)

```
GRPKEY GRPTYP TRAFSNO PADGRP NCCLS GRPINFO
_____________________________________________________________________

EANNX1ICDTWK EANT 50 NPDGP NCOF 0 IC EAN MIDL 16 7 16 16 EAPT 2 2 214
NILIDX OT 214 111 MANUAL 0 NONE 0 1 VOICE_DATA 160 (MCCS) (OHQ)
(REORGVAL) (CTRUAUTH) (PANIVAL ANIPIN Y) (VANIDB) $

EAN682TWMFWK EANT 0 NPDGP NCIT 0 2W EAN MIDL 16 7 16 16 EAPT 5 5 214
NILIDX NIL 214 111 MANUAL 0 NONE 0 1 3_1KHZ 160 (ALTTRTMT) $

EAN670TWMFWK EANT 0 NPDGP NCIT 0 2W EAN MIDL 16 7 16 16 EAPT 5 5 214
NILIDX NIL 214 111 MANUAL 0 NONE 0 1 3_1KHZ 160 (ALTTRTMT) (CAIN)
(TMCICBLK BLK_BOTH) $

EAN861C7LP00 EANT 50 NPDGP NCOF 0 2W EAN MIDL 16 7 16 16 EAPT 10 4
214 ECS2EAEO NIL 214 111 MANUAL 0 RTE 0 1 VOICE_DATA 160 (OHQ)
(ID24_ON) (VPROMPTS) (TMCICBLK BLK_CIP) $

EAN635TWMFWK EANT 50 NPDGP NCOF 0 2W EAN MIDL 16 7 16 16 EAPT 2 2 214
NILIDX OT 214 111 MANUAL 0 RTE3 0 1 VOICE_DATA (MCCS) (OHQ) (OHQTERM)
(TCAIN) (TCAINGRP TERMGRP) $
```

Table history

UCS17

Added option JIP.

UCS15

Added three new values, NIL, CC119 and CC720, to subfield TERMACC of option AMAREC. Added new option ORGSAREC under existing TRKGRP AMAREC Option. Added new TRKGRP Options ACCESSID, TRN, RESERVED, LDCUST. Added subfields TEN_DIGIT_POPULATED, FIRST_TWO_DIGITS, and REMAINING_EIGHT_DIGITS to TRN (A60009574).

UCS14

Added two new values, CC110 and CC117, to subfield ORIGACC of option AMAREC (A60008453). Two new SS7 ISUP index values, UCS2AT and UCS2IXC, are added to the ISUPIDX field (A60008453).

UCS13

Removed UCS07 and UCS07FLEX values from table OPTION=CDRTMPLT (A60007776).

TRKGRP (EANT trunk group type) (continued)

UCS12

The module was updated for editorial comments.

UCS11

The OPCHIDX field is updated. The maximum number of entries is expanded to 1023. (A60006449).

UCS09

Added UAANISCR option to OPTION vector (AX0987). Added options LATA, ENFNPAOP and AMAREC to the options vector (AX1247). Added PANIVAL to the option field and added ANINPA value to the PANIVAL field (AX1247). The NETSEC option was updated to included ORIG_NETSEC, TERM_NETSEC, ORIG_PROFIDX and TERM_PROFIDX fields (AX0980).

UCS08

The ANSWRPVD, CICSIZE, DEFCIC, JIP, OUTCIC, TCAIN, TCAINGRP, and TMCICBLK options were added.

The TMCICDLV option was removed.

Supplementary information

Patch BUB51, introduced in UCS05, provides the same functionality being provided by the OUTCIC override field. During the one night process (ONP) for table TRKGRP, if patch BUB51 is active on the dump side, all tuples with an OUTCIC entered are restored with the same OUTCIC and an override value of Y. Also during the ONP for table TRKGRP, the TMCICDLV option is removed from all tuples. The TMCICBLK option is placed on the restored tuples depending on the data entered for each trunk. For SS7 trunks, the TMCICBLK BLK_BOTH option is set only on those trunks with an ISUPINDEX of UCS2DEX.

If the feature “UCS/NCS Early Answer Supervision for UA" is active by patch TSH28 on the dump side then, during a one night process, SOC UTRS0005 will be set to the ON state.

Option ANSWRPVD can only be set for a trunk group using SS7 protocol (SGRPVAR=C7UP in table TRKSGRP). If operating company personnel attempt to set option ANSWRPVD for a trunk not using the SS7 protocol, the switch displays the following message:

```
ANSWRPVD OPTION IS VALID ONLY WHEN SGRPVAR IN TRKSGRP IS
DATAFILLED AS C7UP.
```

TRKGRP (EANT trunk group type) (end)

If operating company personnel set the TCAINGRP option without setting the TCAIN option, the switch generates the following warning message:

```
WARNING: NO TRIGGERING WILL BE DONE FOR CALLS TERMINATING
ON THIS TRUNK GROUP IF TCAIN OPTION IS NOT DATAFILLED.
```

If operating company personnel set the CAINGRP option without setting the CAIN option, the switch generates the following warning message:

```
WARNING: NO TRIGGERING WILL BE DONE FOR CALLS ORIGINATING
ON THIS TRUNK GROUP IF CAIN OPTION IS NOT DATAFILLED.
```

TRKGRP (EDAL trunk group type)

Table name

TRKGRP (EDAL trunk group type) table

Functional description

EDAL trunk group type defines information for the operating company to connect subscriber locations to the switch. The configuration simulates electronic tandem network (ETN) switching and ETN-like networking to subscribers.

Field descriptions

The following table describes field names, subfield names, and valid data ranges for table TRKGRP (EDAL trunk group type).

(Sheet 1 of 9)

Field	Subfield or refinement	Entry	Explanation and action
GRPKEY		Valid CLLI datafilled in table CLLI	GROUP KEY. Enter the CLLI name used to identify the EDAL trunk group type.
GRPTYP		EDAL	GROUP TYPE. Enter the trunk group type EDAL.
TRAFSNO		0 to 127	TRAFFIC SEPARATION NUMBER. Select entry as follows: If the switch has the optional traffic separation software, enter the outgoing traffic separation number (between 1 and 127) assigned to intersection. If traffic separation is not required, enter zero. If the switch has the software package that includes the Traffic Separation Peg Count feature package, the range of values for the outgoing traffic separation numbers are dependent upon parameter TFAN_OUT_MAX_NUMBER in the OFCENG table. For a switch without the Traffic Separation Peg Count feature package, the range of values for the traffic separation numbers is 0 to 15.

TRKGRP (EDAL trunk group type) (continued)

(Sheet 2 of 9)

Field	Subfield or refinement	Entry	Explanation and action
			Northern Telecom (Nortel) recommends that outgoing traffic separation number 1 through 9 be reserved for generic traffic separation numbers. Refer to table TFANINT for more information regarding traffic separation numbers.
PADGRP		Valid pad group datafilled in table PADDATA	PAD GROUP. Enter the pad group name if pad groups are defined in table PADDATA. Enter NPDGP (fixed loss plan) if no pad group is required.
NCCLS			NO CIRCUIT CLASS. Upon exhausting the route list, No Circuit On-net Trunk (NCON) defines the No Circuit Class OM (in group OFZ2) to peg when a group is the last element in the route list. Enter one of the following types:
		NCRT	Enter NCRT for no circuit.
		NCTC	Enter NCTC for no circuit toll completing trunk.
		NCLT	Enter NCLT for no circuit local tandem trunk.
		NOSC	Enter NOSC for no circuit service circuit trunk.
		NCBN	Enter NCBN for no circuit business network trunk.
		NCID	Enter NCID for no circuit inward dial.
		NCOT	Enter NCOT for no circuit other trunk.
		NCIT	Enter NCIT for no circuit intertoll trunk.
		NCIM	Enter NCIM for no circuit intermachine trunk.
		NCON	Enter NCON for no circuit on-network trunk.
		NCOF	Enter NCOF for no circuit off-network trunk.
GRPINFO		see refinements	GROUP INFORMATION. Datafill the EDAL trunk group type refinements.

TRKGRP (EDAL trunk group type) (continued)

(Sheet 3 of 9)

Field	Subfield or refinement	Entry	Explanation and action
	COS	0 to 119	CLASS OF SERVICE. Enter the class of service code used in screening calls.
	PRTNM	NPRT or valid pretranslator datafilled in table STDPRTCT	PRETRANSLATOR NAME. Enter a 4-character pretranslator name (datafilled in table STDPRTCT) if standard pretranslation is required. Enter NPRT for no pretranslation.
	SELSEQ		SELECT SEQUENCE. Enter one of the following: MIDL, LIDL, ASEQ, DSEQ, CWCTH, CCWCTH, or WIDEBAND.
		MIDL	Enter MIDL (most idle) for a 2-way trunk group with a far-end link switch with least idle select sequence, or far-end is not a link list switch, or trunk group direction is incoming or outgoing.
		LIDL	Enter LIDL (least idle) for a 2-way trunk group with a far-end link list switch with most idle select sequence.
		ASEQ	Enter ASEQ (ascending sequence) to use a trunk group member immediately following the last trunk member chosen.
		DSEQ	Enter DSEQ (descending sequence) to select a trunk group member immediately preceding a trunk group member in use is the next trunk member chosen.
		CWCTH	Enter CWCTH (clockwise circular trunk hunting) to start a clockwise, circular search of the route list starting at the most recently released (MRR) trunk. The MRR reference point changes constantly. The search selects the first idle trunk.
		CCWCTH	Enter CCWCTH (counterclockwise circular trunk hunting) to start a counterclockwise, circular search of the route list starting at the MRR trunk. The search selects the first idle trunk.

TRKGRP (EDAL trunk group type) (continued)

(Sheet 4 of 9)

Field	Subfield or refinement	Entry	Explanation and action
		WIDEBAND	Enter WIDEBAND to allow the agent to handle wideband calls. Only new trunk groups may specify wideband.
	ODSCFLTR	5 to 255	ORIGINATING DISCONNECT FILTER. Enter the minimum amount of time in 10-millisecond increments that the UCS DMS-250 switch observes a sustained on-hook (disconnect) signal from the originating central office before declaring disconnect.
	ORIGFLTR	5 to 255	ORIGINATIONI FILTER. Enter the minimum amount of time in 10-millisecond increments that the UCS DMS-250 switch observes origination (ground on tip conductor) from a central office before declaring origination.
	TDSCFLTR	5 to 255	TERMINATING DISCONNECT FILTER. Enter the minimum amount of time in 10-millisecond increments that the UCS DMS-250 switch observes on-hook before declaring disconnect.
	ANSWFLTR	5 to 255	ANSWER FILTER. Enter the minimum amount of time in 10-millisecond increments that the UCS DMS-250 switch observes answer before answer is declared. ***Note:*** Monitoring the A or A- and B-bit values received from terminator for the trunk, loop start foreign exchange station (FXS), and ground start FXS interfaces detects hardware answer. A hardware answer signal for the time specified in this field is declared an answer.
	ALTSEIZ	Y or N	ALTERNATE SEIZURE. The ALTSEIZ field activates different AB-bit seizure configurations for FXOs. Enter ALTSEIZ to set the circuit on a DTC using bit signaling equal to AB=10. Omit ALTSEIZ so the circuit is no a DTC and the bit signaling equals AB=00.

TRKGRP (EDAL trunk group type) (continued)

(Sheet 5 of 9)

Field	Subfield or refinement	Entry	Explanation and action
	DIALTONE	S, C, or N	DIALTONE. Enter C to apply carrier dialtone (400 Hz) toward the subscriber. Enter S to apply standard dialtone (350 + 440 Hz). Enter N to apply no dialtone.
	RETOFFHK	AOD, ADC, AOS, AOP, AAD, NIL	RETURN OFFHOOK. This field specifies when the UCS DMS-250 switch returns a sustained offhook over a tie trunk interface to a PBX. Enter AOD for after origination. Enter ADC for after digit collection. Enter AOP for after outpulsing. Enter AAD for after answer detected. Enter AOS for after outgoing seizure. Enter NIL when an EDAL connect to a telephone.
	OHQ	Y or N	OFFHOOK QUEUING. Enter Y to allow incoming calls (from this trunk group) to use off-hook queuing capabilities on the terminating trunk group.
	OHQTERM	Y or N	TERMINATING OFFHOOK QUEUING. Enter Y to allow offhook queuing for terminating calls on this trunk group.

TRKGRP (EDAL trunk group type) (continued)

(Sheet 6 of 9)

Field	Subfield or refinement	Entry	Explanation and action
	TRAFCLS	NIL, LINE, INTERCEPT, REPAIR, XX, IR, CA, DD, IA, IE, IT, LW, MN, MT, OA, RC, SP, TC, TE, TG, TM, TO, TS, TT, TW, AL, AN, CB, CD, CP, CS, DA, DS, IN, MA, MB, NT, OF, OW, PS, RR, RS, SC, SO, TA, TI, TK, TP, VC, VR, WE, MI, ON, BL, IM, OT, DL, DB, ID	TRAFFIC CLASS. Enter NIL (the default) for the traffic usage class where the trunk group is assigned.
	ATDANS	Y or N	AUDIO TONE DETECTOR ANSWER. Enter ATDANS to enable the operating companies' ability to detect software answer (rather that hardware answer) on DAL tie trunks. ATDANS is only available to outgoing or 2-way trunks. When this field is datafilled, the terminating DAL attaches an audio tone detector (ATD) and attempts to provide software answer. Otherwise, the terminating DAL uses the hardware answer capability. When ATDANS=N, datafill the DELAYATD refinement. See section ATDANS=N for refinement datafill.
	DETDIAL	Y or N	DIALTONE DETECTOR. Enter DETDIAL to enable dialtone detection as a proceed to send a signal before outpulsing. This pertains to outgoing or 2-way FXO trunks only. Omit to disable.

TRKGRP (EDAL trunk group type) (continued)

(Sheet 7 of 9)

Field	Subfield or refinement	Entry	Explanation and action
	FASTIDGT	2 to 30	FAST INTERDIGITAL TIME. Enter the fast interdigital time. Fast interdigital timing is used for international dialing. A minimum and maximum number of digits to collect is specified in table STDPRTCT for IDDD calls. Refer to table STDPRTCT and subtable STDPRT for more information. The UCS DMS-250 switch uses the partial dial timing parameter specified in table TRKSGRP for the minimum required digits and uses the fast interdigital timing value for the remaining digits. This refinement is only used as a digit collection time if the STDPRT IN selector is used. Table TRKSGRPs digit collection time PARTDIAL is used if the operating company personnel use the STDPRT IP selector.
	IEXCLINX	0 to 255	INCOMING EXCLUSION INDEX. Enter a number between 0 and 255 to index into table IEXCLUDE. Table IEXCLUDE indicates NPAs and NXXs to block or allow.
	OPART	0 to 999	ORIGINATING PARTITION. Enter the originating partition number to be associated with the trunk group and translated to a serving translation scheme (STS) for region code screening.
	SNPA	000 to 999	SERVING NUMBERING PLAN. Enter the digits to prefix when a local subscriber dials a local 7-digit number and an NPA prefix is required for outpulsing. This situation could occur if the operating company were to use code type LRTE in the HNPACODE table.

TRKGRP (EDAL trunk group type) (continued)

(Sheet 8 of 9)

Field	Subfield or refinement	Entry	Explanation and action
	TIMEBIAS	-12 to 12	TIMEBIAS. Enter the timebias. If the originating trunk group and the UCS DMS-250 switch are in different time zones, specify in one-hour increments the time difference between them. This shows the subscriber's true origination time which is needed to apply the restricted usage by date and time feature (for example, if a call originates in California and enters the UCS DMS-250 switch in Texas, the TIMEBIAS is -2 hours). Enter zero if there is no time zone difference.
	VAUTHFLD	Up to 15 digits or NOAUTHS	AUTHORIZATION CODE. Enter the authorization code digits to file with the trunk group. Enter NOAUTHS when the authorization code digits are not filed within the trunk group.
	ZONE	0 to 9, A to C, AUTO	ZONE. Enter a zone type number. Use this field to calculate if looparound IMTs with echo canceller are needed. Add the ZONE number assigned to the originating trunk group to the ZONE number assigned to the first choice int he terminating route list.
	TPART	0 to 31	TERMINATING PARTITION. Enter the value identifying the terminating partition for this trunk group. The TPART is used to obtain the appropriate routing STS. The default is 31.
	PDT	Y or N	PDT.
	ACCTLEN	0 or 2 to 5	ACCOUNT LENGTH.
	ADIN	0 to 99	AUTHCODE DATABASE INDEX NUMBER. Enter the ADIN. This field indexes table AUTHCODU. The default is 0.
	COSOVE	Y or N	CLASS OF SERVICE OVERRIDE. Enter Y to override class of service screening. Addition digits must be dialed when class of service is overridden.

TRKGRP (EDAL trunk group type) (continued)

(Sheet 9 of 9)

Field	Subfield or refinement	Entry	Explanation and action
	VPNSIX	Y or N	VIRTUAL PRIVATE NETWORK 6-DIGIT DIALING. Enter Y to enable 6-digit dialing for VPN services.
	TSUSR	0 to 254	TRUNK GROUP SUSPEND/RESUME TIMER. Enter the timing value used for suspend timing. Range of values for TSUSR is 0 to 254, in 100-ms (.1-second) increments. The default is 160 (16 seconds). The total value of the timer is 0 to 25.4 seconds. When this option is not datafilled or is datafilled to 0, no suspend timing is done and the SUSPEND is treated as a RELEASE.
	OPTION	$	OPTIONS. There are no supported options. Enter $.

ATDANS=N

When ATDANS=N, datafill the DELAYATD refinement.

Refinement	Subfield or refinement	Entry	Explanation and action
DELAYATD		1 to 100	AUDIO TONE DETECTOR DELAY. Enter an amount of time to delay ATD.

Datafill example

The following example shows sample datafill for table TRKGRP (EDAL trunk group type).

```
GRPKEY GRPTYP TRAFSNO PADGRP NCCLS GRPINFO
_____________________________________________

EDL280TWDPGS EDAL 127 NPDGP NCON 0 EDL MIDL 16 7 16 16 N S NIL Y Y DL
Y 19 N 5 0 111 214 0 6112211 0 0 N 2 1 N Y 160 $

EDL281TWDPGO EDAL 127 NPDGP NCON 0 EDL MIDL 16 7 16 16 Y S NIL Y Y DL
Y 19 N 5 0 111 214 0 6112242 0 0 N 0 1 Y Y 160 $
```

Table history

UCS12

The module was updated for editorial comments.

UCS07

Trunk group type EDAL was created.

TRKGRP (IMT trunk group type)

Table name

TRKGRP (IMT trunk group type) table

Functional description

IMT trunk group type assigns the intermachine trunk groups connecting the UCS DMS-250 switch to other DMS-250 switches in the network. The UCS DMS-250 switch supports originating, terminating, and 2-way access over IMTs.

The UCS DMS-250 switch also provides support for universal access (UA) calls and reorigination (for UA calls only) on inter-network ISUP IMTs.

IMTs allow compatibility between the network and electronic tandem network (ETN) switches for calls originating on the UCS DMS-250 switch.

The UCS DMS-250 switch differentiates between ETN calls and private network calls by means of the originating trunk group table parameter ETN. All ETN-IMT calls originate and terminate on trunk groups marked ETN-IMT. Non-ETN calls may not originate on or terminate to ETN-IMT Trunks.

The UCS DMS-250 switch ignores the traveling class mark and outpulses for routing only in the ETN nodes.

The trunk group type IMT is automatically assigned an originating source of non/local (NLCL).

Table size

This minimum number of tuples for this table is 0; the maximum is 8191.

Field descriptions

The following table describes field names, subfield names, and valid data ranges for table TRKGRP (IMT trunk group type).

Field	Subfield or refinement	Entry	Explanation and action
GRPKEY		Valid CLLI datafilled in table CLLI	GROUP KEY. Enter the CLLI assigned to the IMT trunk group.
GRPTYP		IMT	GROUP TYPE. Enter the trunk group type IMT.

TRKGRP (IMT trunk group type) (continued)

Field	Subfield or refinement	Entry	Explanation and action
TRAFSNO		0 to 127	TRAFFIC SEPARATION NUMBER. Select entry as follows: If the switch has the optional traffic separation software, enter the outgoing traffic separation number, 1-127, assigned to intersection. If traffic separation is not required, enter zero. If the switch has software package that includes the Traffic Separation Peg Count feature package, the range of values for the outgoing traffic separation numbers are dependent upon parameter TFAN_OUT_MAX_NUMBER in the OFCENG table. For a switch without the Traffic Separation Peg Count feature package, the range of values for the traffic separation numbers is 0-15. It is recommended that outgoing traffic separation numbers 1 through 9 be reserved for generic traffic separation numbers. Further information concerning traffic separation numbers can be found in table TFANINT.
PADGRP		NPDGP or valid pad group defined in table PADDATA	PAD GROUP. Enter the pad group name if pad groups are defined in table PADDATA. Enter NPDGP (fixed loss plan) if no pad group is required.
NCCLS			NO CIRCUIT CLASS TYPE. Upon exhausting the route list, No Circuit On-net Trunk (NCON) defines the No Circuit Class OM (in group OFZ2) to peg when group is the last element in the route list. Enter one of the following types:
		NCRT	NCRT=no circuit
		NCTC	NCTC=no circuit toll completing trunk
		NCLT	NCLT=no circuit local tandem trunk
		NOSC	NOSC=no circuit service circuit trunk

TRKGRP (IMT trunk group type) (continued)

Field	Subfield or refinement	Entry	Explanation and action
		NCBN	NCBN=no circuit business network trunk
		NCID	NCID=no circuit inward dial
		NCOT	NCOT=no circuit other trunk
		NCIT	NCIT=no circuit intertoll trunk
		NCIM	NCIM=no circuit intermachine trunk
		NCON	NCON=no circuit on-network trunk
		NCOF	NCOF=no circuit off-network trunk
COS		0 to 119	CLASS OF SERVICE. Enter the class of service code used in screening calls.
DIR		IC, OG, 2W	DIRECTION. Enter IC (incoming), OG (outgoing), or 2W (2-way) to define the direction of traffic flow.
PRTNM		NPRT or valid pretranslator datafilled in table STDPRTCT	STANDARD PRETRANSLATOR TABLE NAME. Enter a 4-pretranslator name, if standard pretranslation is required. Enter NPRT for no pretranslation. ***Note:*** This name is datafilled in table STDPRTCT.
SELSEQ			SELECT SEQUENCE. Enter one of the following: LIDL, MIDL, ASEQ, DSEQ, CWCTH, CCWCTH, or WIDEBAND.
		LIDL	Enter Least Idle (LIDL) for a 2-way trunk group with a far-end link list switch with most idle select sequence.
		MIDL	Enter most idle (MIDL) for a 2-way trunk group with a far-end link switch with least idle select sequence, or far end is not a link list switch, or trunk group direction is incoming or outgoing.
		ASEQ	Enter ascending sequence (ASEQ) to use a trunk group member immediately following the last trunk member chosen.

TRKGRP (IMT trunk group type) (continued)

Field	Subfield or refinement	Entry	Explanation and action
		DSEQ	Enter descending sequence (DSEQ) to select a trunk group member immediately preceding a trunk group member in use is the next trunkmember chosen.
		CWCTH	Enter clockwise circular trunk hunting (CWCTH) to start a clockwise, circular search of the route list starting at the most recently released (MRR) trunk. The MRR reference point changes constantly. The search selects the first idle trunk.
		CCWCTH	Enter counterclockwise circular trunk hunting (CCWCTH) to start a counterclockwise, circular search of the route list starting at the MRR trunk. The search selects the first idle trunk.
		WIDEBAND	Enter WIDEBAND to allow the agent to handle wideband calls. Only new trunk groups may specify wideband. When SELSEQ=WIDEBAND, datafill the WBSELSEQ, WBGRPING, and WBSEARCH refinements.
	WBSELSEQ		WIDEBAND SELECTION SEQUENCE. Enter ASEQ or DSEQ to define how the UCS DMS-250 switch locates an idle wideband trunk for call termination. ***Note:*** Northern Telecom (Nortel) recommends setting ASEQ up at one end of the trunk and DSEQ at the other end to inhibit the occurrence of glare. Glare is the simultaneous seizure of a trunk by switches at each end.
		ASEQ	ASCENDING SEQUENCE. Enter ASEQ to indicate the switch should check first-defined DS1 span's lowest-numbered DS0 channel and search through the last-defined DS1 span's DS0s.

TRKGRP (IMT trunk group type) (continued)

Field	Subfield or refinement	Entry	Explanation and action
		DSEQ	DESCENDING SEQUENCE. Enter DSEQ to indicate the switch should check last-defined T1 span's highest-numbered DS0 channel and search through the first-defined span's DS0s.
	WBGRPING		WIDEBAND GROUPING. Enter FIXED, FLEXIBLE, or FLOATING to describe the slot arrangement used in call processing.
		FIXED	Enter FIXED to indicate *n* consecutive channels on the DS1 span begin and end on exact boundaries (*n*=6 or *n*=24 for H0 and H11 calls only).
		FLEXIBLE	Enter FLEXIBLE to indicate that the slot arrangement begins at any DS0 channel on the DS1 span (*n*=2 to 24).
		FLOATING	Enter FLOATING to indicate *n* consecutive channels on the DS1 span (*n*=2 to 24).
	WBSEARCH		WIDEBAND SEARCH. Enter BESTFIT or FIRSTFIT to define how the UCS DMS-250 switch locates a group of time slots.
		BESTFIT	Enter BESTFIT to reduce fragmentation by selecting the *n* channels according to a best fit, where the largest groups of contiguous channels remain available for large bandwidth calls. Nortel recommends using BESTFIT for 1-way trunks.
		FIRSTFIT	Enter FIRSTFIT to inhibit glare by selecting the first available *n* slot.
ODSCFLTR		5 to 255	ORIGINATING DISCONNECT FILTER. Enter the minimum amount of time in 10-millisecond increments that the UCS DMS-250 switch observes a sustained on-hook (disconnect) signal from the originating central office before declaring disconnect.

TRKGRP (IMT trunk group type) (continued)

Field	Subfield or refinement	Entry	Explanation and action
ORIGFLTR		5 to 255	ORIGINATION FILTER. Enter the minimum amount of time in 10-millisecond increments that the UCS DMS-250 switch observes origination (ground on tip conductor) from a central office before declaring origination.
TDSCFLTR		5 to 255	TERMINATING DISCONNECT FILTER. Enter the minimum amount of time in 10-millisecond increments that the UCS DMS-250 switch observes on-hook before declaring disconnect.
ANSWFLTR		5 to 255	ANSWER FILTER. Enter the minimum amount of time in 10-millisecond increments that the UCS DMS-250 switch observes answer before answer is declared. ***Note:*** Monitoring the A or A- and B-bit values received from terminator for tie trunk, loop start foreign exchange station (FXS), and ground start FXS interfaces detects hardware answer. A hardware answer signal for the time specified in this field is declared an answer.
ISUPIDX			ISDN USER PART INDEX. This field specifies the interworking between the different network domains.
		NILIDX	NILIDX. ISUP calls cannot go through with NILIDX datafilled. This field is used for non-ISUP trunks.
		UCS2UCS	UCS2UCS. An ISUP trunk between two UCS DMS-250 switches.
		UCS2DEX8	UCS2DEX8. An ISUP trunk between a UCS DMS-250 switch and an DSC DEX switch.
		UCS2EAEO	UCS2EAEO. An ISUP trunk between a UCS DMS-250 switch and an Equal Access End Office of a LEC.
		USP2USP	USP2USP. An ISUP trunk between two USSPRINT DMS-250 switches.

TRKGRP (IMT trunk group type) (continued)

Field	Subfield or refinement	Entry	Explanation and action
		UCS2MCI	UCS2MCI. An ISUP trunk between a UCS DMS-250 switch and an MCI switch.
		UCSGITU	
		UCS2USP	UCS2USP. An ISUP trunk between a UCS DMS-250 switch and a USSPRINT DMS-250 switch.
		USP2UCS	USP2UCS. An ISUP trunk between a USSPRINT switch and a UCS DMS-250 switch.
		UCSGWAY	UCSGWAY. An ISUP IMT trunk on a UCS DMS-250 switch, providing limited Gateway functionality.
TRAFCLS		NIL, LINE, INTERCEPT, REPAIR, XX, IR, CA, DD, IA, IE, IT, LW, MN, MT, OA, RC, SP, TC, TE, TG, TM, TO, TS, TT, TW, AL, AN, CB, CD, CP, CS, DA, DS, IN, MA, MB, NT, OF, OW, PS, RR, RS, SC, SO, TA, TI, TK, TP, VC, VR, WE, MI, ON, BL, IM, OT, DL, DB, ID	TRAFFIC CLASS. Enter the traffic usage class where the trunk group is assigned. This field is not used by UCS DMS-250 switch software, but is provided for the convenience of operating companies who wish to associate their own traffic class code with each trunk group.
DIALTONE		C, N, S	DIALTONE. Enter C if dialtone applied toward the subscriber is carrier dialtone (400Hz). Enter N if no dialtone is required. Enter S if standard dialtone is applied (350 + 440 Hz).
ETN		Y or N	Enter N indicating this trunk group does not connect to an ETN network. Enter Y indicating this trunk group connects to an ETN network.

TRKGRP (IMT trunk group type) (continued)

Field	Subfield or refinement	Entry	Explanation and action
			Note: Only those calls originating on ETN-IMTs terminate to a trunk group marked as an ETN-IMT. Non-ETN calls are not allowed to originate or terminate on ETN-IMT trunk groups.
ZEROMPOS		NONE, or valid position datafilled in table POSITION	ZERO MINUS POSITION. Enter the position in the POSITION table that is used to route Zero Minus (0-) calls on this trunk group. Enter NONE if 0- calls are not routed on this trunk group.
FASTIDGT		2 to 30	FAST INTERDIGITAL TIME. Enter the fast interdigital time. Fast interdigital timing is used for international dialing. A minimum and maximum number of digits to collect is specified in the Standard Pretranslator table STDPRTCT for IDDD calls. (Refer to subtable STDPRT in this document for further information.) The UCS DMS-250 switch uses the Partial Dial Timing parameter specified in table TRKSGRP for the minimum required digits and uses the fast interdigital timing value for the remaining digits. This field is only used as a digit collection timer if the STDPRTCT selector IN is used. Table TRKSGRP digit collection timer PARTDIAL is used if the operating company personnel use selector IP in table STDPRTCT.
CPIXFER		NEVER, ALWAYS, CPNONLY, CGNONLY	CALLING PARTY INFORMATION TRANSFER. This field controls the delivery of ANI on originating and terminating ISUP IMTs when the call is not marked as Operator Assisted (OA) or Operated Handled (OH). It has no effect on OA or OH calls. This field is for originations and terminations on ISUP IMT trunk group. The default is ALWAYS.

TRKGRP (IMT trunk group type) (continued)

Field	Subfield or refinement	Entry	Explanation and action
DIALPLAN		ND3PA, SIA3P, SA3P, QS3PAO, SMD4PA, S3PA, ADDR, SD4PA, D3PA, ADDRT, SMDAA4P, NILIMT, AUADDANI, UKIMT, I3PA	DIALPLAN. Enter the type of dialplan. • ADDR: Use for inter- and intra-network ISUP IMTs to interconnect to UCS DMS-250 and non-UCS DMS-250 switches for calls involving UCS EOPS. • I3PA: Use for intra-network trunks. Allows a 3-digit routing partition to be passed as part of the dialed number in the SS7 IAM. Upon receiving the IAM, the UCS DMS-250 switch translates the routing partition to an STS that is used to route the call. This allows a call to maintain its STS as it traverses multiple switches.
OPART		0 to 999	ORIGINATING PARTITION. Enter the originating partition number to be associated with the trunk group translating to a serving translation scheme for region code screening.
TPART		0 to 31	TERMINATING PARTITION. Enter the value identifying the terminating partition for this trunk group. The TPART is used to obtain the appropriate routing STS. The default is 31.
NETWKSPC			NETWORK SPECIFIC. This field signifies interworking of a UCS DMS-250 switch with another UCS DMS-250 switch as well as a DEX type switch via ISUP IMTs.
		INTRA	INTRA. The trunk group is assumed to terminate within the carrier's own network. This is the default.
		INTER	INTER. The trunk group is assumed to terminate in another carrier's network.
		GLOBAL	GLOBAL option for global ISUP IMT trunks. See section NETWKSPC=GLOBAL refinement datafill. ***Note:*** SOC option GIMT0001 (UCS DMS-250 in global market) must be enabled to use GLOBAL.

TRKGRP (IMT trunk group type) (continued)

Field	Subfield or refinement	Entry	Explanation and action
ONNETTRK		Y or N	ON-NETWORK TRUNK. This field indicates whether the IMT is on-network or off-network. The Y value indicates the trunk is on-net and the N value indicates the trunk is off-net. The default value is N.
BCNAME		NILBC, SPEECH, 64KDATA, 64KX25, 56KDATA, DATAUNIT, 64KRES, 3_1KHZ, 7_KHZ, VOICE_DATA, or 64K_RATE_AD_DATA	BEARER CAPABILITY NAME. This field indicates what type of signal will be transmitted.
RECALLDT		AUTO, MANUAL, NONE	RECALL DIALTONE. Enter one of the following: AUTO. For the subscriber to automatically receive dialtone after the initial called party disconnect or upon completion of a treatment. MANUAL. Dialing an octothorpe (#) or an asterisk (*) can reoriginate dialtone. NONE. Indicates neither MANUAL nor AUTO recall dialtone is used. NONE is the default.
SNDRPSIG		2 to 30	SENDERIZED PERMANENT SIGNAL TIMER. This value gives the reorigination timeout value, when reorigination facility for the universal access calls originated on inter-network ISUPIMT is supported. The unit of the timer is in seconds. The default value is 4.

TRKGRP (IMT trunk group type) (continued)

Field	Subfield or refinement	Entry	Explanation and action
	TSUSR	0 to 254	TRUNK GROUP SUSPEND/RESUME TIMER. Enter the timing value used for suspend timing. Range of values for TSUSR is 0 to 254, in 100-ms (.1-second) increments. The default is 160 (16 seconds). The total value of the timer is 0 to 25.4 seconds. When this option is not datafilled or is datafilled to 0, no suspend timing is done and the SUSPEND is treated as a RELEASE.
SNPA		000 to 999	SERVING NUMBERING PLAN AREA. Enter a three digit Serving Numbering Plan Area.
TIMEBIAS		-12 to 12	TIMING BIAS. Enter the timebias. If the originating trunk group and the terminating switch are in different time zones, specify in one hour increments the time difference between them. This shows the subscriber's tru origination time which is needed to apply the restricted usage by date and time feature (for example if a call originates in California and enters a switch in Texas, the TIMEBIAS is -2 hours.) Enter zero if there is no time zone difference.
UCSUST_ OPTION			OPTIONS. This field allows optional features; enter up to 35 options.
		NIL	NIL. Enter NIL to remove an option.
		OHQ	OFFHOOK QUEUING. Enter OHQ to enable this field, allowing incoming calls from this trunk group to use offhook queuing capability on a terminating trunk group. Omit OHQ to disable.
		OHQTERM	TERMINATING OFFHOOK QUEUING. Enter OHQTERM to enable this field, allowing offhook queuing for terminating calls on this trunk group. Omit OHQTERM to disable.
		SCRNCL	SCREEN CLASS. The UCS DMS-250 switch does not support this option.

TRKGRP (IMT trunk group type) (continued)

Field	Subfield or refinement	Entry	Explanation and action
		DETDIAL	DIALTONE DETECTION. Enter DETDIAL to enable dialtone detection as a proceed to send signal before outpulsing. This pertains to outgoing or 2-way foreign exchange office (FXO) trunks only. Omit DETDIAL to disable.
		ATDANS	AUDIO TONE DETECTOR ANSWER. Enter ATDANS to enable the operating company to optionally detect software answer (rather than hardware answer). When UCSUST_OPTION=ATDANS, datafill the DELAYATD refinement.
	DELAYATD	1 to 100	AUDIO TONE DETECTOR DELAY. Enter the amount of time (1-100) to delay the ATD.
		RLT	RELEASE LINE TRUNK. Enter RLT to assign RLT processing capabilities. When OPTION=RLT, datafill the VERSION and PARMBLK refinements. ***Note:*** The ENSR SOC option must be enabled for RLT.
	VERSION	V1	VERSION. Enter V1.
	PARMBLK	Y or N	PARAMETER BLOCK. Enter Y to indicate the generic digits, Carrier Identification Code (CIP), and Transit Network Selector (TNS) parameters are blocked; IAMs on outgoing SS7 RLT trunks will not include these parameters. Enter N to indicate the parameters are transmitted. N is the default.
		ASD	ANSWER SUPERVISION DETECTION. Enter ASD to enable call processing to send or receive an ASD signal before answer supervision. Omit ASD to disable.
		TERMIND	TERMINATING INDICATOR. Enter TERMIND to enable whether a special terminating digit follows the last digit of the called number (on DTMF trunks).

TRKGRP (IMT trunk group type) (continued)

Field	Subfield or refinement	Entry	Explanation and action
		MBGXLA	MULTIPLE BUSINESS GROUP. Enter MBGXLA to include the multiple business group parameter in the IAM for outgoing and incoming calls over this trunk. Omit MBGXLA to disable.
		ISDNXFER	ISDN TRANSFER. Enter ISDNXFER to enable ISDN transfer. Omit ISDNXFER to disable.
		ID24_ON	ID24_ON will screen for ID number 24 for all incoming calls on trunks SS7 FGD, and PTS FGD, and SS7 IMT.
		BLOCKNB	BLOCK NARROWBAND. This option prevents the switch from terminating or originating narrowband calls on the trunk group. It can be set only if the SELSEQ field is set to WIDEBAND.
		MCCS	MECHANIZED CALLING CARD SERVICE. Set this option to enable tones-based MCCS calls. This option is not datafillable when the Basic Calling Card Services option is set to IDLE. When the option is ON, option MCCS is datafillable. The ON to IDLE transition required that the datafill in this option be removed.
		REORGVAL	REORIGINATION VALIDATION. If this option is set, TCN number is revalidated for reoiginated MCCS calls (tones and voice prompts).
		CICRTE	CIC ROUTING. If this option is set, translations and routing are based on the CIC received on the originating trunk (using table CICROUTE). If not set, CIC-based translations and routing are not performed.
		TMCICBLK	TERMINATING TRUNK CIC BLOCKING. Enter TMCICBLK to specify that CIC is to be blocked for calls on SS7-FGD/SS7-IMT/MF-FGD trunks. Enter data for the TMCICBLK refinement.

TRKGRP (IMT trunk group type) (continued)

Field	Subfield or refinement	Entry	Explanation and action
	TMCICBLK	BLK_CIP, BLK_TNS, BLK_BOTH	TMCICBLK. Enter one of the following: BLK_CIP. Enter BLK_CIP for SS7 trunks to block the delivery of the CIP parameter, or for PTS trunks to block delivery of the CIC for national calls. BLK_TNS. Enter BLK_TNS for SS7 trunks to block the delivery of the TNS parameter, or for PTS trunks to block delivery of the CIC for international calls. BLK_BOTH. Enter BLK_BOTH for PTS and SS7 trunks to block delivery of the CIC.
		DEFCIC	DEFAULT CARRIER IDENTIFICATION CODE ROUTING. If this option is set, translations and routing are based on the default CIC. Refer to section OPTION=DEFCIC for refinement datafill.
		CICSIZE	CARRIER IDENTIFICATION CODE SIZE. If CICSIZE is not specified for a trunk, a size of 3DIGS is used for the call. Enter datafill for the SIZE refinement.
	SIZE	3DIGS, 4DIGS	SIZE. Enter the value of 3DIGS or 4DIGS to specify either a 3-digit or 4-digit CIC.
		OUTCIC	OUTPULSE CARRIER IDENTIFICATION CODE. If OVERRIDE is set, then the OUTCIC CICDIGS value is outpulsed. Refer to section OPTION=OUTCIC for refinement datafill. ***Note:*** This option is not available on DAL, FGA, FGB, FGC trunks.
		OPCHOICE	OPERATOR CHOICE. When this option is set, datafill the the OPCHIDX refinement. Refer to section OPTION=OPCHOICE for refinement datafill.

TRKGRP (IMT trunk group type) (continued)

Field	Subfield or refinement	Entry	Explanation and action
		SOPCHIDX	SEND OPERATOR CHOICE INDEX. The optional parameter SOPCHIDX specifies whether the UCS DMS-250 switch will pass the OPCHIDX across SS7 IMTs. If the option is present on the terminating trunk, then the OPCHIDX is transported in the outgoing generic digits parameter of the IAM message if it was used to route the call. ***Note:*** The NOA in the outgoing IAM must be OA and the ISUPIDX must be UCS2UCS.
		ROPCHIDX	RECEIVE OPERATOR CHOICE INDEX. The optional parameter ROPCHIDX specifies whether the UCS DMS-250 switch will use the OPCHIDX received in the SS7 IAM to route the call. If the option is present on the originating trunk, then the OPCHIDX received in the SS7 IAM is used to route the call. ***Note 1:*** CIC and auth overrides this entry for inter-RLT trunks. ***Note 2:*** Neither SOPCHIDX nor ROPCHIDX are recommended for inter-RLT trunks.
		VPROMPTS	VOICE PROMPT CALL. Set this option to trigger voice prompting for MCCS calls.
		CDRTMPLT	CDR TEMPLATE. Use this option to define a template for formatting CDRs. Refer to the OPTION=CDRTMPLT section for refinement datafill.

TRKGRP (IMT trunk group type) (continued)

Field	Subfield or refinement	Entry	Explanation and action
		PCMATANS	PCMATANS. This global ISUP IMT option determines on a per-trunk group basis whether an early ACM or an early ANM is to be sent out to the originating switch for direct DTMF digit collection. When this option is datafilled, an early ACM message is sent immediately followed by an early ANM message to provide voice path cut-thru for DTMF digit collection. When this option is not datafilled, only an early ACM message is sent to provide voice path cut-through for DTMF digit collection. ***Note:*** SOC option GIMT0001 (UCS DMS-250 in global market) must be enabled to use this option.
		SIGPTDNO	SIGNAL PORTED NUMBER. This option indicates to call processing whether the next switch is able to receive LNP protocol information. When present, this option gets the original called party number from the LNP GAP. The GAP is then deleted and the FCI bits M is reset.
		CAIN	CARRIER ADVANCED INTELLIGENT NETWORK. If this option is set then the trunk group is CAIN capable. It must be turned on to trigger any CAIN events and to allow triggering for calls originating on this trunk. Not supported for INTRA IMTs
		CAINGRP	CAIN GROUP. Enter this option to specify which CAIN group the call should be subscribed to. Also datafill subfield CAINGRP.
	CAINGRP	valid CAINGRP from table CAINGRP	Enter the name of the CAIN group you want to subscribe to.

TRKGRP (IMT trunk group type) (continued)

Field	Subfield or refinement	Entry	Explanation and action
		OUTNOA	OUTGOING NATURE OF ADDRESS. This option triggers the outgoing IAM message to include the nature of address (NOA) value entered in the OUTNOA subfield. This option is supported only on inter and intra SS7 IMTs. Enter datafill for the OUTNOA subfield. ***Note:*** The NOA value is found in the Called Party Number parameter of the IAM message.
	OUTNOA	0 to 127	Enter the NOA value.
		GWYTRK	GATEWAY TRUNK. Enter datafill for the SERVCC and C11C12PT subfields.
	SERVCC	1 to 999	SERVING COUNTRY CODE. Enter the serving country code (CC) value.
	C11C12PT	valid pretranslator name or NPRT	CODE-11, CODE-12 PRETRANSLATOR TABLE NAME. Enter the PRTNM for code-11, code-12 calls. The default value is NPRT.
		LNPRLT	LNPRLT. If LNPRLT is set, then the OFFCCODE trigger can be encountered for LNP functionality if RLT information is received for the call. ***Note 1:*** Option LNPRLT can be set only if NETWKSPC=INTER or INTRA. ***Note 2:*** The CAIN and LNPRLT options cannot both be set for Inter IMT trunks (NETWKSPC=INTER).
		IPTRUNK	IPTRUNK. Enter IPTRUNK to indicate that the trunk is connected directly to an Intelligent Peripherals (IPs) using SS7 signalling (the trunk can be located on either a local SSP or a remote SSP). This option should be provisioned only on tandem IMTs which are involved with IP interaction.

TRKGRP (IMT trunk group type) (continued)

Field	Subfield or refinement	Entry	Explanation and action
		JIP	JURISDICTION INFORMATION PARAMETER. Enter JIP to specify a JIP for a call when one is not available from the incoming call. Refer to section OPTION=JIP for refinement datafill. ***Note:*** Option JIP cannot be set for Global SS7 IMT trunks (NETWKSPC=GLOBAL).
		ANSWRPVD	ANSWRPVD. Set this option to allow an early answer indication for UA calls on the provisioned originating trunk group. ***Note:*** Option ANSWRPVD is supported only for the SS7 protocol (SGRPVAR=C7UP in table TRKSGRP).
		TCAIN	TERMINATING CAIN. Enter TCAIN to indicate that the trunk group is AIN capable when the trunk is the terminating agent. This option must be set in order for the trunk group to trigger on any AIN events related to the Terminating Call Model. This option must also be turned on for triggering on an Office basis.
		TCAINGRP	TERMINATING CAIN GROUP. Enter TCAINGRP to specify the terminating CAIN group for the trunk group. Enter datafill for the CAINGRP refinement.
	CAINGRP	valid CAINGRP	CAIN GROUP. Enter a valid CAINGRP from table CAINGRP.
		SUPERGD	SUPER GENERIC DIGITS PARAMETER. Enter SUPERGD to propogate the SuperGD parameter in the outgoing Initial Address Message (IAM) message if a SuperGD parameter was received in the incoming IAM message.

NETWKSPC=GLOBAL

When NETWKSPC=GLOBAL, datafill the CLIREQ and CLISCRN refinements.

Refinement	Subfield or refinement	Entry	Explanation and action
CLISCRN			CLISCRN. Enter CLISCRN if the CLI screening is to be carried out on the global ISUP IMTs.
CLIREQ			CLIREQ. Enter CLIREQ if a CLI is required for the call to go through. If this field is set to Y and a CLI is not received, an ADBF (ANI Database Failure) treatment is given to the call. If CLIREQ, datafill refinement CLIPREC.
	CLIPREC	CHGN or CGPA	CLIPREC. Enter CHGN for charge number. Enter CGPA for calling party number. This field provides the flexibility to the customer in choosing the CLI from either Charge number or Calling party number when both are received in the incoming IAM. The default value is CGPA.

OPTION=DEFCIC

When OPTION=DEFCIC, datafill the CIC, OUTPULSE, OPERRTE, ANIRTE, CAINCIC, and DFCICRTE refinements.

Refinement	Subfield or refinement	Entry	Explanation and action
CIC		0000 to 9999	CARRIER IDENTIFICATION CODE. Enter the default CIC digits to be outpulsed.
OUTPULSE		Y or N	OUTPULSE. Enter Y or N to use the default CIC for outpulsing.
OPERRTE		Y or N	OPERRTE. Enter Y or N to use the default CIC as an index into table OPERRTE.
ANIRTE		Y or N	AUTOMATIC NUMBER IDENTIFICATION ROUTING. Enter Y or N to use the default CIC during ANI screening. ***Note:*** SOC UTRS0200 must be on before this option is used for a call.

TRKGRP (IMT trunk group type) (continued)

Refinement	Subfield or refinement	Entry	Explanation and action
CAINCIC		Y or N	CARRIER ADVANCED INTELLIGENT NETWORK CARRIER IDENTIFICATION CODE. Enter Y or N to use the default CIC by CAIN in the Carrier Parameter of an outgoing TCAP query message and/or to use the default CIC for trigger table checking. ***Note:*** CAIN0100 SOC must be on before this option is used for a call.
DFCICRTE		Y or N	DEFAULT CARRIER IDENTIFICATION CODE ROUTING. Enter Y or N to use the default CIC as an index into table CICROUTE to allow CIC Routing. ***Note:*** UTRS0001 SOC must be on before this option is used for a call.

OPTION=OUTCIC

When OPTION=OUTCIC, datafill the CICDIGS and OVERRIDE refinements.

Refinement	Subfield or refinement	Entry	Explanation and action
CICDIGS		0000 to 9999	CARRIER IDENTIFICATION CODE DIGITS. Enter the CIC digits to be outpulsed.
OVERRIDE		Y or N	OVERRIDE. Enter Y or N to indicate if the OUTCIC CICDIGS value is outpulsed.

OPTION=OPCHOICE

When OPTION=OPCHOICE, datafill the OPCHIDX refinement.

Refinement	Subfield or refinement	Entry	Explanation and action
OPCHIDX		0 to 1023	OPERATOR CHOICE INDEX. This index points to a tuple in table OPCHOICE.

TRKGRP (IMT trunk group type) (continued)

OPTION=CDRTMPLT

When OPTION=CDRTMPLT, datafill the TMPLTIDX and USEEDIT refinements.

Refinement	Subfield or refinement	Entry	Explanation and action
TMPLTIDX		Valid name datafilled in table CDRTMPLT	TEMPLATE INDEX. The UCS05, UCS06, and UCS06FLEX templates are available without a SOC. When SOC option UBFR0001 is enabled, you can use table CDRTMPLT to create new CDR template. For more information on CDR templates, see *UCS DMS-250 Billing Records Application Guide.*
USEEDIT		N or Y	USE EDIT. Enter N to use the active version of the CDR template. Y indicates that the edit version is used. ***Note:*** This field is used for testing purposes only. It should be set to N, which is the default.

OPTION=JIP

The Jurisdiction Information Parameter (JIP) option in table TRKGRP allows a default JIP to be specified for a trunk group when a JIP is not received in the incoming call. The JIP parameter carries geographic and service provider information that is associated with the calling party. The JIP parameter also contains the originating switch's LRN (Local Routing Number).

A JIP can be datafilled for DAL, PRI, FGD, and SS&-IMT (Intra and Inter) trunking agencies. Note that the provisioning a default JIP on Intra IMT trunk groups may result in ambiguous values when used in a typical network configuration.

TRKGRP (IMT trunk group type) (continued)

When OPTION=JIP, datafill the COUNT, TWO_DIGS, and EIGHT_DIGS refinement.

Field descriptions

Refinement	Subfield or refinement	Entry	Explanation and action
COUNT		SIX or TEN	COUNT. Enter SIX or TEN to specify the number of digits in the JIP.
TWO_DIGS		N, 0 to 9, B, C, D, E, F	TWO_DIGS. Enter two digits of the following characters: N, 0, 1, 2, 3, 4, 5, 6, 7, 8, 9, B, C, D, E, F.
EIGHT_DIGS		N, 0 to 9, B, C, D, E, F	EIGHT_DIGS. Enter eight digits of the following characters: N, 0, 1, 2, 3, 4, 5, 6, 7, 8, 9, B, C, D, E, F.

Listed below is an example of datafilling a ten digit JIP.

> Enter the following values for the JIP option fields:

- COUNT: TEN

- TWO_DIGS: 89

- EIGHT_DIGS: 01234567

This example datafill would send a JIP of “0123456789” when establishing a terminating connection. The TWO_DIGS are appended at the end of the EIGHT_DIGS.

‘N’, ‘B’, ‘C’, ‘D’, ‘E’, or ‘F’ can be datafilled in either of the TWO_DIGS or EIGHT_DIGS fields. Table control displays these digits as ‘0’. However, when used in establishing the terminating connection, it is sent as follows:

Datafilled Digit	Digit Set To The Terminating Party
N	0
B	D
C	E
D	D

TRKGRP (IMT trunk group type) (continued)

Datafilled Digit	Digit Set To The Terminating Party
E	E
F	F

When adding a complete tuple in table TRKGRP in non-prompt mode, ‘JIP’ followed by a ten digit number can be entered. Below are example CI commands for adding a tuple with a JIP of ‘0123456789’:

```
> ADD IMT771C7LPN2 IMT 40 NPDGP NCIM 0 2W IMT MIDL 16 7 16 16 +
> UCS2UCS NIL C N NONE 4 ALWAYS I3PA 111 0 INTER N VOICE_DATA +
> NONE 4 160 214 0 JIP 0123456789
```

Listed below is an example of datafilling a six digit JIP.

> Enter the following values for the JIP option fields:

- COUNT: SIX

- TWO_DIGS: 89

- EIGHT_DIGS: 12345678

This example datafill would send a JIP of “123456” when establishing a terminating connection. The TWO_DIGS as well as the last two digits of the EIGHT_DIGS are discarded. Only the first six digits of the EIGHT_DIGS field are used.

‘N’, ‘B’, ‘C’, ‘D’, ‘E’, or ‘F’ can be datafilled in either of the TWO_DIGS or EIGHT_DIGS fields. The table control displays these digits as ‘0’. However, when used in establishing the terminating connection, it is sent as follows:

Datafilled Digit	Digit Set To The Terminating Party
N	0
B	D
C	E
D	D

TRKGRP (IMT trunk group type) (continued)

Datafilled Digit	Digit Set To The Terminating Party
E	E
F	F

When adding a complete tuple in table TRKGRP in non-prompt mode, 'JIP' followed by a six digit number can be entered. Below are example CI commands for adding a tuple with a JIP of '123456':

> ADD IMT771C7LPN2 IMT 40 NPDGP NCIM 0 2W IMT MIDL 16 7 16 16 +

> UCS2UCS NIL C N NONE 4 ALWAYS I3PA 111 0 INTER N VOICE_DATA +

> NONE 4 160 214 0 JIP 0123456789

Datafill example

The following example shows sample datafill for table TRKGRP (IMT trunk group type).

```
GRPKEY GRPTYP TRAFSNO PADGRP NCCLS GRPINFO
_____________________________________________

IMTNX2ICDTDD IMT 40 NPDGP NCIT 0 IC IMT MIDL 16 7 16 16 NILIDX NIL S
N RTE1 4 ALWAYS I3PA 111 0 INTER N VOICE_DATA NONE 4 160 (OHQ) (ASD)
(TERMIND) $

IMTNX4ICMFDD IMT 40 NPDGP NCIT 0 IC IMT MIDL 16 7 16 16 NILIDX NIL S
N RTE2 4 ALWAYS QS3PAO 111 0 INTRA N VOICE_DATA NONE 4 160 $

GIMT720C7DR11 IMT 40 NPDGP NCIM 0 2W GIMT MIDL 16 7 16 16 UCSGITU NIL
C N NONE 4 ALWAYS ADDR 111 0 GLOBAL Y Y CHGN N VOICE_DATA NONE 4 160
214 0 (GWYTRK 999 IMT) $

IMT761C7LP01 IMT 40 NPDGP NCIM 0 2W IMT MIDL 16 7 16 16 UCS2UCS NIL C
N DIRECT 4 ALWAYS I3PA 111 0 INTER N VOICE_DATA NONE 4 160 (OHQ)
(OHQTERM) (ISDNXFER) (CAIN) (CAINGRP VPNGRP) $

IMT761C7LP12 IMT 40 NPDGP NCIT 0 2W IMT MIDL 16 7 16 16 UCS2UCS NIL C
N NONE 4 ALWAYS I3PA 111 0 INTRA N VOICE_DATA NONE 4 160 214 0
(LNPRLT) $

IMT761C7LP11 IMT 40 NPDGP NCIT 0 2W IMT MIDL 16 7 16 16 UCS2UCS NIL C
N NONE 4 ALWAYS ADDR 111 0 INTER N VOICE_DATA NONE 4 160 214 0
(LNPRLT) (CAINGRP LNPGRP) $
```

TRKGRP (IMT trunk group type) (continued)

Table history

UCS12

The module was updated for editorial comments.

UCS11

Added SUPERGD option to field UCSUST_OPTION (AX1397). The OPCHIDX field is updated. The maximum number of entries is expanded to 1023. (A60006449).

UCS08

The ANSWRPVD, CICSIZE, DEFCIC, GWYTRK, IPTRUNK, JIP, LNPRLT, OUTCIC, OUTNOA, TCAIN, TCAINGRP and TMCICBLK options were added to UCSUST_OPTION.

The TMCICDLV option was removed.

UCS07

Added SIGPTDNO, CAIN, and CAINGRP to field UCSUST_OPTION.

UCS06

Added GLOBAL value to NETWKSPC field and new PCMATANS option to support global ISUP IMTs.

Supplementary information

Patch BUB51, introduced in UCS05, provides the same functionality being provided by the OUTCIC override field. During the one night process (ONP) for table TRKGRP, if patch BUB51 is active on the dump side, all tuples with an OUTCIC entered are restored with the same OUTCIC and an override value of Y. Also during the ONP for table TRKGRP, the TMCICDLV option is removed from all tuples. The TMCICBLK option is placed on the restored tuples depending on the data entered for each trunk. For SS7 trunks, the TMCICBLK BLK_BOTH option is only set on trunks with an ISUPINDEX of UCS2DEX.

If the feature “UCS/NCS Early Answer Supervision for UA" is active by patch TSH28 on the dump side then, during a one night process, SOC UTRS0005 will be set to the ON state.

When an Inter IMT trunk (NETWKSPC=INTER) is datafilled with option CAINGRP, but neither the CAIN option nor the LNPRLT option is set, the following warning is displayed:

TRKGRP (IMT trunk group type) (continued)

```
WARNING: No triggering will be done for calls originating
on this trunk group if CAIN option or LNPRLT option is
not datafilled.
```

When an Intra IMT trunk (NETWKSPC=INTRA) is datafilled with option CAINGRP, but the LNPRLT option is not set, the switch displays the following warning:

```
WARNING: No triggering will be done for calls originating
on this trunk group if LNPRLT option is not datafilled.
```

Option ANSWRPVD can only be set for a trunk group using SS7 protocol (SGRPVAR=C7UP in table TRKSGRP). If operating company personnel attempt to set option ANSWRPVD for a trunk not using the SS7 protocol, the switch displays the following message:

```
ANSWRPVD OPTION IS VALID ONLY WHEN SGRPVAR IN TRKSGRP IS
DATAFILLED AS C7UP.
```

Option ANSWRPVD can only be set for Inter IMT trunks. If operating company personnel attempt to set option ANSWRPVD for an Intra IMT or Global IMT trunk, the switch displays the following error message:

```
ANSWRPVD OPTION IS ONLY VALID FOR INTER-IMTs.
```

Any attempt to change NETWKSPC in table TRKGRP from INTER to INTRA or GLOBAL while option ANSWRPVD is set will result in the switch generating the following error message:

```
ANSWRPVD OPTION IS ONLY VALID FOR INTER-IMTs.
```

The ANSWRPVD and RLT options cannot be set for the same trunk. Any attempt to set both options for the same trunk results in the switch generating the following error message:

TRKGRP (IMT trunk group type) (end)

```
ANSWRPVD AND RLT OPTION ARE NOT ALLOWED ON THE SAME
TRUNK.
```

If operating company personnel set the TCAINGRP option without setting the TCAIN option, the switch generates the following warning message:

```
WARNING: NO TRIGGERING WILL BE DONE FOR CALLS TERMINATING
ON THIS TRUNK GROUP IF TCAIN OPTION IS NOT DATAFILLED.
```

TRKGRP type INT101

International 101 Test Trunk Group Type

The switching unit dependent data required for each Gateway 101 test trunk group is listed below:

- the common language location identifier (CLLI) code assigned in table CLLI
- the trunk group type (INT101)
- the traffic separation number
- the name of the pad group
- the no-circuit class
- the country code translator name
- the class of service screening
- the international pretranslator
- the call detail recorder class
- the select sequence
- the trunk group direction (incoming or outgoing)
- the common calling party category (must be specified when the trunk group direction is incoming)

Requirement to busy trunks

If parameter TRK_OOS_CHK_ON in table OFCENG is set to Y, all trunks in the group must be busied prior to changing the value of fields by data modification order (DMO).

Dialing types allowed

Dial pulse (DP), DIGITONE (DT) and multifrequency (MF) dialing are allowed on incoming Gateway 101 test trunk groups and Private Line trunk groups.

A switching unit must be equipped with DT or MF Receivers for DT or MF reception respectively.

Related tables

For description of other formats in the Trunk Group table, see the general information section of table TRKGRP.

For trunk subgroup data for Gateway 101 test trunk groups and Private Line trunk groups, see table TRKSGRP.

TRKGRP type INT101 (continued)

For trunk member data for Gateway 101 test trunk groups and Private Line trunk groups, see table TRKMEM.

Datafill

The following table lists the datafill for table TRKGRP type INT101.

Field descriptions (Sheet 1 of 6)

Field	Subfield or refinement	Entry	Explanation and action
GRPKEY		see subfield	*Group key* This field consists of subfield CLLI.
	CLLI	alphanumeric (1 to 16 characters)	*Common language location identifier* Enter the common language location identifier (CLLI) code that represents the Gateway 101 test trunk group in table CLLI.
GRPINFO		see subfields	*Variable group data* This field consists of subfields GRPTYP, TRAFSNO, PADGRP, NCCLS, CCTRNSL, SCRNCL, PRTNUM, CDRCLASS, SELSEQ, and DIR_DEP. Refer to section “General field information" in table TRKGRP for information concerning an alternate structure for this field that results from the datafill of table CUSTFLDS.
	GRPTYP	INT101	*Trunk group type* Enter INT101 for the Gateway 101 test trunk group type.

TRKGRP type INT101 (continued)

Field descriptions (Sheet 2 of 6)

Field	Subfield or refinement	Entry	Explanation and action
	TRAFSNO	numeric (0 to 127)	*Traffic separation number* Enter the incoming and outgoing traffic separation number assigned to the trunk group. If a traffic separation number is not required, enter 0 (zero). For switches with software package NTX085AA (Traffic Separation Peg Count), enter a value from 1 to the value of office parameter TFAN_OUT_MAX_NUMBER in table OFCENG. For switches without software package NTX085AA, enter a value from 1 to 15. If the switching unit has software package NTX085AA, the range of values for the incoming and outgoing traffic separation numbers is dependent upon the value of office parameters TFAN_IN_MAX_NUMBER and TFAN_OUT_MAX_NUMBER in table OFCENG. For switching units without software package NTX085AA, the range of values for the traffic separation numbers is 0 to 15. Incoming and outgoing traffic separation numbers 1 to 9 should be reserved for generic traffic separation numbers. With the traffic separation feature, a count of all calls by type of call (direct dial [DD], operator assisted [OA] or no prefix [NP]) can be accumulated between an originating source (incoming trunk or an originating line attribute) and a terminating destination (outgoing trunk, terminating line attribute, tone, or announcement. See table TFANINT for the assignment of incoming to outgoing traffic separation numbers.

TRKGRP type INT101 (continued)

Field descriptions (Sheet 3 of 6)

Field	Subfield or refinement	Entry	Explanation and action
	PADGRP	alphanumeric (1 to 5 characters) or NPDGP	*Pad group* Enter the name of the pad group assigned to the trunk group in table PADDATA. If a pad group name is not required, enter NPDGP (no pad group). Field PADGRP contains the name of the pad group in table PADDATA that lists the value of the pad circuits that can be switched into the network when one of the members of the group is involved in a call. Different values for the pad circuits can be specified when the circuit connects to an agent with a different pad group. Network pad switching is only applicable when the circuit is connected to a new network. For more information, refer to table PADDATA.

TRKGRP type INT101 (continued)

Field descriptions (Sheet 4 of 6)

Field	Subfield or refinement	Entry	Explanation and action
	NCCLS	NCBN NCID NCIM NCIT NCLT NCOF NCON NCOT NCRT NCTC or NOSC	*Operational measurements no-circuit class* Enter the operational measurements (OM) no-circuit class (NCCLS) to indicate which OM register, in OM groups OFZ2 and SOTS, is incremented if treatment GNCT (generalized no circuit) occurs. The no-circuit class NCRT count is incremented (OFZ2 NCRT) when the trunk group is the last route in a route list and a line or trunk encounters an all trunks busy condition on this list. If the trunk group is the last route in a route list and an all trunks busy condition is encountered on the list, the originating line or trunk is routed to the Generalized No Circuit treatment (GNCT) in the appropriate treatment table. In addition, the treatment GNCT count is incremented. If the trunk group direction is incoming, this field is not required. Enter NCRT (no circuit). The initial value for this trunk group type is NCRT. For more information, refer to table TRKGRP and the *Operational Measurements Reference Manual*.
	CCTRNSL	alphanumeric (1 to 4 characters)	*Country code translator name* If trunk direction is incoming and country code translation is required, enter the country code translator name assigned to the International 101 test trunk group by the operating company. Otherwise enter NCTR for no country code translation.

TRKGRP type INT101 (continued)

Field descriptions (Sheet 5 of 6)

Field	Subfield or refinement	Entry	Explanation and action
	SCRNCL	alphanumeric (1 to 4 characters)or NSCR	*Class-of-service screening table name* If the trunk group direction is incoming and class-of-service screening is required, enter the name of the class-of-service screening table (datafilled in table SCRNCLAS) to which digit translation routes. If class-of-service screening is not required, enter NSCR (no screening).
	PRTNUM	alphanumeric (1 to 4 characters) or NPRT	*Standard pretranslator name* If the trunk group is incoming and standard pretranslation is required, enter the name of the standard pretranslator defined in table STDPRTCT to which digit translation is to route after the receipt of the first digit. If pretranslation is not required, enter NPRT (no pretranslation).
	CDRCLASS	alphanumeric (1 to 4 characters)	*Call detail recorder class* Enter the call detail recorder class of the Gateway 101 test trunk group, as defined by the operating company. Up to 31 different classes can be assigned. Each class is represented by a name. If no call detail recorder class is required, enter NCDR (no call detail recording).
	SELSEQ	MIDL	*Select sequence* This field not required for this trunk group. Enter MIDL.
	DIR_DEP	see subfield	*Direction dependent refinements* This field consists of subfield DIR and (for incoming trunk groups) refinement CCPC.

Field descriptions (Sheet 6 of 6)

Field	Subfield or refinement	Entry	Explanation and action
	DIR	IC or OG	*Direction* This field specifies the trunk group direction. For incoming traffic, enter IC and datafill refinement CCPC. For outgoing traffic, enter OG (no refinements apply).
	CCPC	alphanumeric (0 to 15 or N)	*Common calling party category* Datafill this field if the value in field DIR is IC. Enter the common calling party category for the T101 test line or enter N (no) if no common calling party category is applicable.

Datafill example

An example of datafill for table TRKGRP and group type INT101 is shown below.

- An incoming Gateway 101 test trunk has a CLLI of IC101.
- The trunk group has no traffic separation and no pad group.
- The country code translator name is CC02.
- The class of service screening name is SCOM.
- The pretranslator name is IP22.
- The call detail recorder name is ZX1Z.
- The common calling party category is not required.

MAP display example for table TRKGRP type INT101

```
GRPKEY GRPINFO
_____________________________________________________

IC101  INT101 0 NPDGP NCRT CC02 SCOM IP22 ZX1Z MIDL IC N
```

TRKGRP (IT trunk group type)

Table name

TRKGRP (IT trunk group type) table

Functional description

In a DMS toll or end office, two-way, incoming, or outgoing trunk group type IT interfaces with a toll or end office to carry toll connecting traffic including toll access, toll completing, and toll tandem. Overlap outpulsing is possible on incoming or two-way dial (DP) trunk groups provided field OVLP in table TRKSGRP is set to Y. In offices without the ROTL software package (without trunk group type T105), the 105 test line can be datafilled as trunk group type IT.

Field descriptions

The following table describes field names, subfield names, and valid data ranges for table TRKGRP (IT trunk group type).

(Sheet 1 of 5)

Field	Subfield or refinement	Entry	Explanation and action
GRPKEY		Valid CLLI datafilled in table CLLI	GROUP KEY. Enter the CLLI name used to identify the IT trunk group type.
GRPTYP		IT	GROUP TYPE. Enter the trunk group type IT.
TRAFSNO		0 to 127	TRAFFIC SEPARATION NUMBER. Select entry as follows: If the switch has the optional traffic separation software, enter the outgoing traffic separation number (between 1 and 127) assigned to intersection. If traffic separation is not required, enter zero. If the switch has the software package that includes the Traffic Separation Peg Cont feature package, the range of values for the outgoing traffic separation numbers are dependent upon parameter TFAN_OUT_MAX_NUMBER in the OFCENG table.

(Sheet 2 of 5)

Field	Subfield or refinement	Entry	Explanation and action
			For a switch without the Traffic Separation Peg Count feature package, the range of values for the traffic separation numbers is 0 to 15. Northern Telecom (Nortel) recommends that outgoing traffic separation number 1 through 9 be reserved for generic traffic separation numbers. Refer to table TFANINT for more information regarding traffic separation numbers.
PADGRP		Valid pad group datafilled in table PADDATA	PAD GROUP. Enter the pad group name if pad groups are defined in table PADDATA. Enter NPDGP (fixed loss plan) if no pad group is required.
NCCLS			NO CIRCUIT CLASS. Upon exhausting the route list, No Circuit On-net Trunk (NCON) defines the No Circuit Class OM (in group OFZ2) to peg when a group is the last element in the route list. Enter one of the following types:
		NCRT	Enter NCRT for no circuit.
		NCTC	Enter NCTC for no circuit toll completing trunk.
		NCLT	Enter NCLT for no circuit local tandem trunk.
		NOSC	Enter NOSC for no circuit service circuit trunk.
		NCBN	Enter NCBN for no circuit business network trunk.
		NCID	Enter NCID for no circuit inward dial.
		NCOT	Enter NCOT for no circuit other trunk.
		NCIT	Enter NCIT for no circuit intertoll trunk.
		NCIM	Enter NCIM for no circuit intermachine trunk.
		NCON	Enter NCON for no circuit on-network trunk.

TRKGRP (IT trunk group type) (continued)

(Sheet 3 of 5)

Field	Subfield or refinement	Entry	Explanation and action
		NCOF	Enter NCOF for no circuit off-network trunk.
GRPINFO		see refinements	GROUP INFORMATION. Datafill the IT trunk group type refinements.
	DIRDATA	IC, OG, 2W	DIRECTION DATA. Enter IC (incoming), OG (outgoing), or 2W (two-way) to define the direction of traffic flow.
	TRAFCLS	NIL, LINE, INTERCEPT, REPAIR, XX, IR, CA, DD, IA, IE, IT, LW, MN, MT, OA, RC, SP, TC, TE, TG, TM, TO, TS, TT, TW, AL, AN, CB, CD, CP, CS, DA, DS, IN, MA, MB, NT, OF, OW, PS, RR, RS, SC, SO, TA, TI, TK, TP, VC, VR, WE, MI, ON, BL, IM, OT, DL, DB, ID	TRAFFIC CLASS. Enter NIL (the default) for the traffic usage class where the turnk gorup is assigned.
	SELSEQ		SELECT SEQUENCE. Enter one of the following: MIDL, LIDL, ASEQ, DSEQ, CWCTH, CCWCTH, or WIDEBAND.
		MIDL	Enter MIDL (most idle) for a 2-way trunk group with a far-end link switch with least idle select sequence, or far-end is not a link list switch, or trunk group direction is incoming or outgoing.
		LIDL	Enter LIDL (least idle) for a 2-way trunk group with a far-end link list switch with most idle select sequence.

TRKGRP (IT trunk group type) (continued)

(Sheet 4 of 5)

Field	Subfield or refinement	Entry	Explanation and action
		ASEQ	Enter ASEQ (ascending sequence) to use a trunk group member immediately following the last trunk member chosen.
		DSEQ	Enter DSEQ (descending sequence) to select a trunk group member immediately preceding a trunk group member in use is the next trunk member chosen.
		CWCTH	Enter CWCTH (clockwise circular trunk hunting) to start a clockwise, circular search of the route list starting at the most recently released (MRR) trunk. The MRR reference point changes constantly. The search selects the first idle trunk.
		CCWCTH	Enter CCWCTH (counterclockwise circular trunk hunting) to start a counterclockwise, circular search of the route list starting at the MRR trunk. The search selects the first idle trunk.
		WIDEBAND	Enter WIDEBAND to allow the agent to handle wideband calls. Only new trunk groups may specify wideband. Refer to the SELSEQ=WIDEBAND section for refinement datafill of the WBSELSEQ, WBGRPING, and WBSEARCH refinements.
	CONNGNPA	3 digits (0 to 9, B to F, N)	CONNECTING NPA. Enter the 3-digit primary terminating NPA when the trunk group is outgoing or 2-way.
	PRTNM	NPRTor valid pretranslator datafilled in table STDPRTCT	PRETRANSLATOR NAME. Enter a 4-character pretranslator name (datafilled in table STDPRTCT) if standard pretranslation is required. Enter NPRT for no pretranslation.
	SCRNCL	NSCRTINTTS WBTLANTLT N	SCREENING CLASS. Enter a screening class. NSCR indicates no screening.

TRKGRP (IT trunk group type) (continued)

(Sheet 5 of 5)

Field	Subfield or refinement	Entry	Explanation and action
	SNPA	000 to 999	SERVING NUMBERING PLAN. Enter the digits to prefix when a local subscriber dials a local 7-digit number and an NPA prefix is required for outpulsing. This situation could occur if the operating company were to use code type LRTE in the HNPACODE table.
	TERMTC	3 digits (0 to 9, B to F, N)	Enter 3 digits.
	TOLLCOMP	Y or N	Enter Y or N.
	CCWKVLD	Y or N	Enter Y or N.
	OPTION		OPTION. Datafill this field to specify optional features; enter up to 35 options.
		BLOCKNB	BLOCK NARROWBAND. This option prevents the switch from terminating or originating narrowband calls on the trunk group. It can be set only if the SELSEQ field is set to WIDEBAND.

SELSEQ=WIDEBAND

When SELSEQ=WIDEBAND, datafill the WBSELSEQ, SBGRPING, and WBSEARCH refinements.

(Sheet 1 of 2)

Refinement	Subfield or refinement	Entry	Explanation and action
WBSELSEQ			WIDEBAND SELECTION SEQUENCE. Enter ASEQ or DSEQ to define how the UCS DMS-250 switch locates an idle wideband trunk for call termination. ***Note:*** Northern Telecom (Nortel) recommends setting ASEQ up at one end of the trunk and DSEQ at the other end to inhibit the occurrence of glare. Glare is the simultaneous seizure of a trunk by switches at each end.
		ASEQ	ASCENDING SEQUENCE. Enter ASEQ to indicate the switch should check first-defined DS1 span's lowest-numbered DS0 channel and search through the last-defined DS1 span's DS0s.
		DSEQ	DESCENDING SEQUENCE. Enter DSEQ to indicate the switch should check last-defined T1 span's highest-numbered DS0 channel and search through the first-defined span's DS0s.
WBGRPING			WIDEBAND GROUPING. Enter FIXED, FLEXIBLE, or FLOATING to describe the slot arrangement used in call processing.
		FIXED	Enter FIXED to indicate *n* consecutive channels on the DS1 span begin and end on exact boundaries (*n*=6 or *n*=24 for H0 and H11 calls only).
		FLEXIBLE	Enter FLEXIBLE to indicate that the slot arrangement begins at any DS0 channel on the DS1 span (*n*=2 to 24).
		FLOATING	Enter FLOATING to indicate *n* consecutive channels on the DS1 span (*n*=2 to 24).

TRKGRP (IT trunk group type) (end)

(Sheet 2 of 2)

Refinement	Subfield or refinement	Entry	Explanation and action
WBSEARCH			WIDEBAND SEARCH. Enter BESTFIT or FIRSTFIT to define how the UCS DMS-250 switch locates a group of time slots.
		BESTFIT	Enter BESTFIT to reduce fragmentation by selecting the *n* channels according to a best fit, where the largest groups of contiguous channels remain available for large bandwidth calls. Nortel recommends using BESTFIT for 1-way trunks.
		FIRSTFIT	Enter FIRSTFIT to inhibit glare by selecting the first available *n* slot.

Datafill example

The following example shows sample datafill for table TRKGRP (IT trunk group type).

```
GRPKEY GRPTYP TRAFSNO PADGRP NCCLS GRPINFO
_____________________________________________

HOSTVLIC IT 0 NPDGP NCIT IC IA MIDL 214 NPRT NSCR 611 000 N N $
LOOP IT 0 NPDGP NCIT 2W NIL MIDL 214 SUPR NSCR 611 000 N N $
REMVLOG IT 0 NPDGP NCIT OG NIL MIDL 214 NPRT NSCR 611 000 N N $
```

TRKGRP type ITL2

International 102 Test Trunk Group Type

International 102 test trunks (ITL2) are used for test calls in switches configured for ITL2 groups with a milliwatt supply of 1020 Hz and balance termination test.

Each ITL2 consists of a trunk circuit with PEC NT1X00AF, and is represented in table CLLI by pseudo-CLLI INTL102T.

The trunk group members assigned to this trunk group are listed in table TRKMEM with CLLI INTL102T.

Note: If using PMTYPE DTM in table TRKMEM, the NT1X80 (enhanced digital recorded announcement machine) card provides the milliwatt tone according to the datafill in field MWDBLEVEL. For example, if MWDBLEVEL is datafilled as 1X00AF, the milliwatt source of 1020 Hz comes from the NT1X80 card. Similarly, if this field is datafilled as 1X00AH, then the NT1X80 provides the -15 dB tone.

For related information, refer to TRKGRP type MAINT.

Datafill

The following table lists the datafill for table TRKGRP type ITL2.

Field descriptions (Sheet 1 of 3)

Field	Subfield or refinement	Entry	Explanation and action
GRPKEY		see subfield	*Group key* This field consists of subfield CLLI.
	CLLI	INTL102T	*Common language location identifier* Enter INTL102T to specify the common language location identifier (CLLI) code for international 102 test trunks.
GRPINFO		see subfields	*Variable group data* This field consists of subfields GRPTYP, TRAFSNO, PADGRP, NCCLS, MWSPRVSN and MWDBLEVL. Refer to section “General field information" in table TRKGRP for information concerning an alternate structure for this field that results from the datafill of table CUSTFLDS.

TRKGRP type ITL2 (continued)

Field descriptions (Sheet 2 of 3)

Field	Subfield or refinement	Entry	Explanation and action
	GRPTYP	ITL2	Enter ITL2 to specify the group type for international 102 test trunks.
	TRAFSNO	numeric (0 to 127)	*Traffic separation number* Enter the incoming and outgoing traffic separation number assigned to the trunk group. If a traffic separation number is not required, enter 0 (zero). For switches with software package NTX085AA (Traffic Separation Peg Count), enter a value from 1 to the value of office parameter TFAN_OUT_MAX_NUMBER in table OFCENG. For switches without software package NTX085AA, enter a value from 1 to 15. Incoming and outgoing traffic separation numbers 1 to 9 should be reserved for generic traffic separation numbers. For more information, refer to table TFANINT.
	PADGRP	alphanumeric (1 to 5 characters)	*Pad group* Enter the name of the pad group assigned to the trunk group in table PADDATA. For more information, refer to table PADDATA.
	NCCLS	NCBN NCID NCIM NCIT NCLT NCOF NCON NCOT NCRT NCTC or NOSC	*Operational measurements no-circuit class* Enter the operational measurements (OM) no-circuit class (NCCLS) to indicate which OM register is incremented if treatment GNCT (generalized no circuit) occurs. The initial value for this trunk group type is NCRT (no circuit). For more information, refer to table TRKGRP and the *Operational Measurements Reference Manual*.

Field descriptions (Sheet 3 of 3)

Field	Subfield or refinement	Entry	Explanation and action
	MWSPRVSN	BMW LMW SMW or TMW	*Milliwatt supervision* Datafill this field to specify the required milliwatt supervision type as outlined below: • Enter BMW for 100 balance supervision. • Enter LMW for 102 local supervision. • Enter SMW for 102 steady supervision. • Enter TMW for 102 toll supervision.
	MWDBLEVL	1X00AF or 1X00AH	*Milliwatt dB level* Enter 1X00AF or 1X00AH. Entries other than this value are not valid.

Datafill example

The following example shows sample datafill for table TRKGRP type ITL2.

MAP display example for table TRKGRP type ITL2

```
GRPKEY      GRPINFO
_____________________________________________________

TERM102T    ITL2 0 TLD NCOT TMW 1X00AF
TERM102L    ITL2 0 TLD NCOT LMW 1X00AF
TERM100Q    ITL2 0 TLD NCOT BMW 1X00AF
```

TRKGRP.IT250

Table name

Trunk Group IT250 (TRKGRP.IT250)

Functional description

The Intertoll 250 (IT250) trunk group is used to connect the DMS-250 Traffic Operator Position (TOPS) facility and the DMS-250 switch. The TOPS outpulses using the IT250 intertoll protocol, while the DMS-250 switch views the incoming side of the trunk as a MIMT trunk.

The IT250/MIMT protocol passes a class of service (COS) digit, an indication of the data conditioning required for the call, partitioning digits used for translation, and the dialed number. The COS digit originates from the trunk group of the trunk requiring operator services and is passed to the DMS-250 TOPS switch via the T250 protocol. The COS digit is passed to the terminating switch for COS screening. The data conditioned digit takes the value one for all operator service calls; the default one implies the call does not require data conditioned circuits. The four partition digits select the translation system in the terminating switch; the partition digits are obtained from the translation name of the TOPS trunk group entry in the TOPSIXLA (TOPS international translation) table.

Field descriptions

The following table describes field names, subfield names, and valid data ranges for table TRKGRP.IT250.

(Sheet 1 of 2)

Field	Subfield or refinement	Entry	Explanation and action
GRPKEY			GROUP KEY. This field consists of subfield CLLI.
	CLLI	alphanumeric	COMMON LANGUAGE LOCATION IDENTIFIER. Enter the CLLI assigned to the trunk group.
GRPTYP		IT250	GROUP TYPE. Enter the trunk group type IT250.
TRAFSNO		0-127	TRAFFIC SEPARATION NUMBER. If switch has the optional traffic separation software, enter the outgoing traffic separation number, 1-127, assigned to the intersection. If traffic separation is not required, enter 0 (zero).

(Sheet 2 of 2)

Field	Subfield or refinement	Entry	Explanation and action
PADGRP		NPDGP	PAD GROUP. Enter the trunk's pad group. This is not used in the DMS-250 switch currently, so enter NPDGP.
NCCLS		NCIT	NO CIRCUIT CLASS TYPE. This is the no circuit class OM to be pegged when GNCT treatment is set immediately after attempting to terminate to this trunk group. When no circuit is available for the IT250, enter NCIT.
GRPINFO		DIR, SELSEQ	GROUP INFORMATION
	DIR	OG	DIRECTION. Define the direction of traffic flow. Enter OG (outgoing) for IT250 trunk group.
	SELSEQ	LIDL, MIDL, ASEQ or DSEQ	SELECT SEQUENCE. When trunk group is two-way (both-way) and far end is a link list switch with most idle (MIDL) select sequence, enter least idle (LIDL) select sequence. When trunk group is two-way (both-way) and far end is a list switch with LIDL select sequence, or far end is not a link list switch, or trunk group direction is IC (incoming or ingess), or OG (outgoing or egress), enter MIDL select sequence. ASEQ (ascending sequence) and DSEQ (descending sequence) are used based on the sequential order of the trunk members in Table TRKMEM.

Datafill example

The following example shows datafill for table TRKGRP.IT250.

TRKGRP.IT250 (end)

CLLI	**GRPTYP**		
IT250TRK	IT250		
TRAFSNO		**PADGRP**	**NCCLS**
0		NPDGP	NCIT
GRPINFO			
DIR	**SELSEQ**		
OG	MIDL		

TRKGRP type ITOPS

International TOPS Trunk Group Type

In a DMS international office, outgoing trunk group type ITOPS interfaces with an international traffic operator position system (ITOPS) office for calls requiring the services of an ITOPS operator.

In a DMS ITOPS office, incoming trunk group type ITOPS interfaces with a DMS international office for calls requiring an ITOPS operator's services.

The signaling format used in this trunk group is in accordance with ITOPS requirements such as:

- Operator Control of Disconnect: Operator control of disconnect is used on outgoing trunks from a local end office (EO) to a toll office (TO) with ITOPS positions. This facility enables ITOPS operators to have control of the calling and the called parties involved in a call. When the calling party disconnects (an on-hook signal is sent from the EO to the TO), the EO does not initiate disconnect until the EO receives an on-hook signal from the TO. This on-hook signal is under ITOPS operator control.
- RGF (Ring Forward) Signal (sent in the forward direction): This signal is used by an ITOPS operator at the originating TO to recall the ITOPS operator at the terminating TO in a previously established connection. It is a wink signal.
- RGB (Ringback) Signal (sent in the backward direction): This signal is used by an ITOPS operator at the terminating TO to recall the ITOPS operator at the originating TO in a previously established connection. This signal is also used by an ITOPS operator to ring a calling party that has has disconnected. It is a wink signal.

For ITOPS signaling requirements, a line signaling system can support either delay-dial or wink start.

TRKGRP type ITOPS (continued)

Datafill

The following table lists the datafill for table TRKGRP type ITOPS.

Field descriptions (Sheet 1 of 3)

Field	Subfield or refinement	Entry	Explanation and action
GRPKEY		see subfield	*Group key* This field consists of subfield CLLI.
	CLLI	alphanumeric (1 to 16 characters)	*Common language location identifier* Enter the common language location identifier (CLLI) code assigned to the trunk group in table CLLI.
GRPINFO		see subfields	*Variable group data* This field consists of subfields GRPTYP, TRAFSNO, PADGRP, NCCLS, SAT, ESUPR, and DIRSEL. Refer to section “General field information" in table TRKGRP for information concerning an alternate structure for this field that results from the datafill of table CUSTFLDS.
	GRPTYP	ITOPS	*Group type* Enter ITOPS for the International TOPS trunk group type.

Field descriptions (Sheet 2 of 3)

Field	Subfield or refinement	Entry	Explanation and action
	TRAFSNO	numeric (0 to 127)	*Traffic separation number* If no traffic separation number is required, enter 0 (zero). If table OFCOPT office parameter TFAN_ENHANCED_FEATURE is set to N, enter the outgoing or incoming traffic separation number assigned to the trunk group in the range from 1 to 15. If table OFCOPT office parameter TFAN_ENHANCED_FEATURE is set to Y, datafill this field as follows: • For outgoing trunk groups, enter the outgoing traffic separation number assigned to the trunk group in the range from 1 to the value of parameter TFAN_OUT_MAX_NUMBER in table OFCENG. • For incoming trunk groups, enter the incoming traffic separation number assigned to the trunk group in the range from 1 to the value of parameter TFAN_IN_MAX_NUMBER in table OFCENG. Incoming and outgoing traffic separation numbers 1 to 9 should be reserved for generic traffic separation numbers. For more information refer to table TFANINT.
	PADGRP	alphanumeric (1 to 5 characters)	*Pad group* Enter the name of the pad group assigned to the trunk group in table PADDATA. For more information, refer to table PADDATA.
	NCCLS	NCRT	*Operational measurements no-circuit class* This field is not required for ITOPS trunk groups. Enter NCRT.

TRKGRP type ITOPS (continued)

Field descriptions (Sheet 3 of 3)

Field	Subfield or refinement	Entry	Explanation and action
	SAT	Y or N	*Satellite* Enter Y (yes) if the trunk is configured to switch through a satellite connection. Otherwise, enter N (no).
	ESUPR	Y or N	*Echo suppressor* If the trunk subgroup has echo suppressors, enter Y. Otherwise, enter N.
	DIRSEL	see subfield	*Direction dependent fields* This field consists of subfield DIR and refinements.
	DIR	IC or OG	*Direction* This field specifies the trunk group direction. For incoming trunk groups, enter IC and datafill refinements XLAD, DISPLAY, ANIFMT, and ANIDNSIZ as described in the following section.. For outgoing trunk groups, enter OG and datafill refinements SELSEQ, ANIFMT, and ANIDNSIZ as described in the section “DIR = OG”..

DIR = IC

For incoming trunk groups, datafill refinement XLAD as described below.

Field descriptions for conditional datafill

Field	Subfield or refinement	Entry	Explanation and action
	XLAD	see subfield	*Translation fields* This field consists of subfield XLADSEL and refinements.
	XLADSEL	UNIV NETATTR or NALT	*Translation selector* If the universal translation system is used, enter UNIV and datafill refinement XLAAREA. If this table indexes into table NETATTR, enter NETATTR and datafill refinement NETINDX. If the North American translation system is used, enter NALT and datafill refinements PRTNM, SCRNCL, SNPA, and ORIGSRC.

DIR = IC and XLADSEL = UNIV

For incoming trunk groups with a value of UNIV in field XLADSEL, datafill refinement XLAAREA as described below, then datafill fields DISPLAY, ANIFMT, and ANIDNSIZ as described in the following Section “DIR = IC”..

Field descriptions for conditional datafill

Field	Subfield or refinement	Entry	Explanation and action
	XLAAREA	see subfield	*Universal translation fields* This field consists of subfield XLASYS and refinement XLANAME.
	XLASYS	AC, AM, CC, CT, CTY, DN, FA, FT, NSC, OFC, PX, or NIL	*Translation system* Enter name of the head table from which translation begins. Entry values other than those listed are not valid.
	XLANAME	alphanumeric (1 to 8 characters) or NIL	*Translation name* Enter a name from the code table that belongs to the head table referenced by field XLASYS.

TRKGRP type ITOPS (continued)

DIR = IC and XLADSEL = NETATTR

For incoming trunk groups with a value of NETATTR in field XLADSEL, datafill refinement NETINDX as described below, then datafill fields DISPLAY, ANIFMT, and ANIDNSIZ as described in the following Section "DIR = IC"..

Field descriptions for conditional datafill

Field	Subfield or refinement	Entry	Explanation and action
	NETINDX	numeric(0 to 1023)	*Network attribute index* Enter a valid network attribute index from table NETATTR. No other translation data is required, since it is available in table NETATTR.

DIR = IC and XLADSEL = NALT

For incoming trunk groups with a value of NALT in field XLADSEL, datafill refinements PRTNM, SCRNCL, SNPA, and ORIGSRC as described below,

then datafill fields DISPLAY, ANIFMT, and ANIDNSIZ as described in the following Section “DIR = IC”..

Field descriptions for conditional datafill (Sheet 1 of 2)

Field	Subfield or refinement	Entry	Explanation and action
	PRTNM	alphanumeric (1 to 4 characters) or NPRT	*Standard pretranslator name* If standard pretranslation is required, enter the name of the standard pretranslator defined in table STDPRTCT to which digit translation is to route after the receipt of the first digit. If pretranslation is not required, enter NPRT (no pretranslation). If office parameter TRK_OOS_CHK_ON in table OFCVAR is set to Y (yes), all trunks in the group must be busy before the value of this field can be changed by data modification order (DMO).
	SCRNCL	alphanumeric (1 to 4 characters)or NSCR	*Class-of-service screening table name* If class-of-service screening is required, enter the name of the class-of-service screening table (datafilled in table SCRNCLAS) to which digit translation routes. If class-of-service screening is not required, enter NSCR (no screening).

TRKGRP type ITOPS (continued)

Field descriptions for conditional datafill (Sheet 2 of 2)

Field	Subfield or refinement	Entry	Explanation and action
	SNPA	numeric (3 digits)	*Serving numbering plan area* Enter the serving numbering plan area (NPA) for the trunk group. If office parameter TRK_OOS_CHK_ON in table OFCVAR is set to Y, all trunks in the group must be busy before the value of this field can be changed by DMO.
	ORIGSRCE	LCL or NLCL	*Originating source* Enter the originating source of the call, LCL (local) or NLCL (non-local). The originating source determines, for the code dialed, whether the call is routed or blocked by the code type in the HNPACODE subtable. For more information, refer to the "Notes on originating source" section in table HNPACONT.HNPACODE.

DIR = IC

For all incoming trunk groups, datafill fields DISPLAY, ANIFMT, and ANIDNSIZ as described below.

Field descriptions for conditional datafill

Field	Subfield or refinement	Entry	Explanation and action
	DISPLAY	numeric (0 to 31)	*Instructional display to operator* Enter 0 (zero). This field not currently used, but is reserved for future use.
	ANIFMT	STDBELL or STDINTL	*ANI format* To indicate that the ANI ID information is one digit long, enter STDBELL. To indicate that the ANI ID information is two digits long, enter STDINTL.
	ANIDNSIZ	numeric (4 to 7)	*Originator's directory number size* Enter the number of digits in the originator's DN.

DIR = OG

For outgoing trunk groups, datafill refinements SELSEQ, ANIFMT, and ANIDNSIZ as described below.

TRKGRP type ITOPS (continued)

Field descriptions for conditional datafill (Sheet 1 of 2)

Field	Subfield or refinement	Entry	Explanation and action
	SELSEQ	ASEQ CCWCTH CWCTH DSEQ LIDL or MIDL	*Select sequence* If the trunk group direction is two-way (2W) and far end is a link list switcher, enter LIDL or MIDL (least or most idle) if the far end is MIDL or LIDL respectively. If the trunk group direction is two-way, the far end is not a link list switcher, and sequential selection does not apply, enter MIDL. If the trunk group direction is incoming (IC), sequential selection does not apply. Enter MIDL. If the trunk group is two-way, the far end is not a link list switcher, and feature package NTX244AB (Enhanced Sequential Trunk Hunting) is present, base the selection order on the order of the trunks in table TRKMEM, and enter • CWCTH or CCWCTH for clockwise or counterclockwise circular trunk hunting from the most recently released trunk in the trunk group, if the far end is CCWCTH or CWCTH respectively, or • ASEQ or DSEQ for ascending or descending sequential selection, if far end is DSEQ or ASEQ respectively. Entries outside this range are not valid.

Field descriptions for conditional datafill (Sheet 2 of 2)

Field	Subfield or refinement	Entry	Explanation and action
			For more information, refer to the general information section of table TRKGRP. ***Note:*** A trunk group trunk selection method cannot be changed. If a change in the selection method is required, a new trunk group must be created with the required trunk selection method. The individual trunks with the old selection sequence must be deleted from the old trunk group and then added to the new trunk group. For an existing trunk group, the selection sequence may be changed to ASEQ from DSEQ or from DSEQ to ASEQ if all the trunk members are installation busy (INB) or unequipped (UNEQ). Refer to table TRKGRP for additional information concerning field SELSEQ.
	ANIFMT	STDBELL or STDINTL	*ANI format* If the ANI ID information is one digit long, enter STDBELL. If the ANI ID information is two digits long, enter STDINTL.
	ANIDNSIZ	numeric (4 to 7)	*Originator's directory number size* Enter the number of digits in the originator's DN to be outpulsed.

Datafill example

The following example shows sample datafill for table TRKGRP type ITOPS.

MAP display example for table TRKGRP type ITOPS

```
GRPKEY  GRPINFO
_____________________________________________________________

OGTOANI ITOPS 10 ELOA NCRT N N OG MIDL STDINTL 7
ICFRANI ITOPS 0 ELOA NCRT N N IC UNIV PX ICANICN 0
                                                    STDINTL 7
```

TRKGRP type LOOPA

Line Loop Test Unit Trunk Group Type

Trunk group type LOOPA is used in switches that are configured for loop-around testing.

Each loop-around test unit consists of a trunk card with product engineering code (PEC) NT2X75AA (loop around test line).

Each A-law loop-around test line consists of a trunk card with PEC NT2X75BA.

The trunk card consists of two circuits. The even-numbered circuit is assigned to the loop port 1 trunk group and is represented in table CLLI by the pseudo-common language location identifier (pseudo-CLLI) LOOPA1. The odd-numbered circuit is assigned to the loop-around port 2 trunk group and is represented in table CLLI by the pseudo-CLLI LOOPA2.

Provision only one of these circuits in a switch.

Datafill

The following table lists the datafill for table TRKGRP type LOOPA.

Field descriptions (Sheet 1 of 3)

Field	Subfield or refinement	Entry	Explanation and action
GRPKEY		see subfield	*Group key* This field consists of subfield CLLI.
	CLLI	LOOPA1 or LOOPA2	*Common language location identifier* Enter the pseudo-common language location identifier (pseudo-CLLI) code for the line loop test unit trunk group.
GRPINFO		see subfields	*Variable group data* This field consists of subfields GRPTYP, TRAFSNO, PADGRP, NCCLS, and CARDCODE. Refer to section “General field information" in table TRKGRP for information concerning an alternate structure for this field that results from the datafill of table CUSTFLDS.

TRKGRP type LOOPA (continued)

Field descriptions (Sheet 2 of 3)

Field	Subfield or refinement	Entry	Explanation and action
	GRPTYP	LOOPA	*Group type* Enter LOOPA to specify the line loop test unit trunk group type.
	TRAFSNO	numeric (0 to 127)	*Traffic separation number* Enter the incoming and outgoing traffic separation number assigned to the trunk group. If a traffic separation number is not required, enter 0 (zero). For switches with software package NTX085AA (Traffic Separation Peg Count), enter a value from 1 to the value of office parameter TFAN_OUT_MAX_NUMBER in table OFCENG. For switches without software package NTX085AA, enter a value from 1 to 15. Incoming and outgoing traffic separation numbers 1 to 9 should be reserved for generic traffic separation numbers. For more information, refer to table TFANINT.
	PADGRP	alphanumeric (1 to 5 characters)	*Pad group* Enter the name of the pad group assigned to the trunk group in table PADDATA. For more information, refer to table PADDATA.

TRKGRP type LOOPA (continued)

Field descriptions (Sheet 3 of 3)

Field	Subfield or refinement	Entry	Explanation and action
	NCCLS	NCBN NCID NCIM NCIT NCLT NCOF NCON NCOT NCRT NCTC or NOSC	*Operational measurements no-circuit class* Enter the operational measurements (OM) no-circuit class (NCCLS) to indicate which OM register is incremented if treatment GNCT (generalized no circuit) occurs. The initial value for this trunk group type is NCRT (no circuit). For more information, refer to table TRKGRP and the *Operational Measurements Reference Manual.*
	CARDCODE	2X75AA or 2X75BA	*Card code* Enter the PEC for the LOOPA trunk group as outlined below. • Enter 2X75AA for the line loop test unit. • Enter 2X75BA for the A-law loop-around test line. If office parameter TRK_OOS_CHK_ON in table OFCVAR is set to Y, busy all trunks in the group before changing the value of this field by data modification order (DMO).

Datafill example

The following example shows sample datafill for table TRKGRP type LOOPA.

MAP display example for table TRKGRP type LOOPA

```
GRPKEY     GRPINFO
_____________________________________________________

LOOPA1     LOOPA 0 TLD NCRT 2X75AA
LOOPA2     LOOPA 0 TLD NCRT 2X75AA
```

Supplementary information

This section provides additional information concerning table TRKGRP and group type LOOPA.

Diagnostic test

A diagnostic test on an A-law looparound test line is run to verify that the card is in an operational condition. This test performs the following functions:

- The software pad is stepped from 0 dB to 7 dB in steps of 1 dB.
- The transmission characteristics of the card are tested to verify that they are within acceptance tolerance levels, as outlined in the following table..

Diagnostic test parameters

Tone frequency (Hz)	Tone level (dBm)	Tone tolerance (dB)
1004	0	-3
910	0	less than -4
985	0	greater than -4
1020	0	less than -4
1200	0	greater than -4

TRKGRP type MAINT

Maintenance Trunk Group Type

The trunk group types that are used for maintenance and test purposes are listed in the table ” Maintenance and test trunk group types”. The maintenance (MAINT) trunk group types are described in this section. Trunk group types ITL2, LOOPA, SOCKT and TTL2 are described under their own separate headings in this document.

An Enhanced Digital Test Unit (EDTU) NT4X45AA, when installed, will emulate the TTT, TTU and DTU trunk groups according to the test to be performed and the datafill. Each EDTU virtual channel will be equivalent to a TTT or a TTU or a virtual DTU channel. When datafilling the trunk tables, each EDTU channel will be designated as one TTT, TTU and DTU and the EDTU will act correspondingly.

Maintenance and test trunk group types (Sheet 1 of 2)

Trunk group type	Pseudo CLLI	Title
ITL2	INTL192T	International 102 test trunk
LOOPA	LOOPA1LOOPA2	Line loop test unit and A-law loop-around test line
MAINT	DCLTONE	Dialable cable-locator tone
MAINT	DTU	Digital test unit
MAINT	ESADGTR	Emergency stand-alone Digitone receivers
MAINT	HSET	Position headset
MAINT	JACK	Position jack
MAINT	LTU	Line test unit
MAINT	MONTALK	Monitor-and-talk
MAINT	MTU	Metallic (or multiline) test unit
MAINT	TERM108	108 test line
MAINT	TTT	Trunk test transmission
MAINT	TTU	Terminating transmission test unit
MAINT	SPARExxxxxx	Spare trunk groups
SOCKT	OCKT	Transmission terminating trunk group

Maintenance and test trunk group types (Sheet 2 of 2)

Trunk group type	Pseudo CLLI	Title
SOCKT	SCKT	Transmission terminating trunk group
TTL2	—	Terminating 102 test line

The trunk subgroup data for the trunk groups, excluding subgroup 1 of the trunk group with pseudo-common language location identifier (CLLI) TTU, is produced automatically by the trunk group datafill. This data is shown in table "Automatically produced trunk subgroup data".

Automatically produced trunk subgroup data (Sheet 1 of 2)

Field	Value
CLLI	(see note)
SGRP	0
CARD CODE	(see note)
SIGDATA	(see note)
DIR	OG
OPULSTYP	NP
OSTARTSG	WK
IDGTIME	2
NUMSTOPS	0
CCONT	MW
RNGBCK	IB
ESUPR	N
SAT	N
REMBSY	N

Note: The values for these fields are defined in the description of field names for table TRKSGRP. If the value in field CLLI is SOCKT, field OSTARTSG in table TRKSGRP has value IM. If the value in field CLLI is TERM102T, fields OPULSETYP and OSTARTSG in table TRKSGRP have values MF and WK respectively.

TRKGRP type MAINT (continued)

Automatically produced trunk subgroup data (Sheet 2 of 2)

Field	Value
DIALMODE	blank
TRKGDTIM	16

Note: The values for these fields are defined in the description of field names for table TRKSGRP. If the value in field CLLI is SOCKT, field OSTARTSG in table TRKSGRP has value IM. If the value in field CLLI is TERM102T, fields OPULSETYP and OSTARTSG in table TRKSGRP have values MF and WK respectively.

Pseudo-CLLI DCLTONE (dialable cable-locator tone)

A dialable cable-locator tone trunk (pseudo-CLLI DCLTONE) is physically connected to a tone generator and is used to locate a specific tip-and-ring cable pair among the bunch of cables in a pedestal.

DTU (digital test unit trunk group)

The digital test unit (DTU) is used for Bit Error rate Tests (BERT) and Offhook Balnet Tests (OHBT). The DTU is located on a NT4X23AA or NT4X45AA card.

ESADGTR (emergency stand-alone Digitone receivers)

An emergency stand-alone Digitone receiver is used in a switch with remote operation and the Emergency Stand-alone (ESA) feature.

Each emergency stand-alone Digitone receiver consists of a trunk circuit with PEC NT2X48AB (digital four-channel receiver).

A maximum of four circuits can be assigned on each remote service module (RSM), and they must be assigned to circuits 2, 3, 4, and 5.

The trunk group is represented in table CLLI by pseudo-CLLI ESADGTR and in table TRKGRP with the trunk group type MAINT.

Use card code ESADGT for this trunk group.

Note: Digitone receivers in the RSM must always be in the installation busy (INB) state. This is necessary for the ESA option.

HSET (position headset trunk group)

The position headset trunk group is required in switches with test or maintenance positions, and is represented in table CLLI by pseudo-CLLI HSET, and in table TRKGRP with trunk group type MAINT.

Each member of the trunk group consists of a trunk circuit with PEC NT2X72AA (four-wire E&M type 1 interface, 600-Ω trunk circuit), NT2X88AA (four-wire E&M interface, 600-Ω trunk circuit) or NT5X30AA (101 communication test line circuit).

Trunk circuit NT2X72AA or NT2X88AA must be used if this trunk group is used for service analysis or if the trunk circuit connects directly to the network.

If service analysis is not provided or the trunk circuit is connected to a 1A2 key set, a trunk circuit with PEC NT5X30AA (101 communication test line circuit) can be used.

One circuit is required for each MAP (maintenance and administration position) or terminal test position (TTP). External trunk number 0 is automatically assigned to the first entry in table TERMDEV (MAP), trunk number 1 is automatically assigned to the second entry in table TERMDEV (TTP01), and so on.

Refer to table SAUSERS for information relating to the assignment of headset circuits to the Service Analysis feature, NTX065.

JACK (position jack trunk group)

The position jack trunk group is required in switches with test or maintenance positions, and is represented in table CLLI by pseudo-CLLI JACK and in table TRKGRP by trunk group type MAINT.

For a local or combined local and toll switches, each member of the trunk group consists of a trunk circuit with PEC NT1X54AA (jack ended trunk circuit pack).

For a toll switch, each member of the trunk group consists of a trunk circuit with PEC NT2X72AA (four-wire E&M type 1 interface, 600-ohm trunk circuit), which is preferred, or PEC NT2X88AA (four-wire E&M interface, 600-Ω trunk circuit).

Three circuits are required for each TTP or MAP. External trunk members 0 to 2 are automatically assigned to the first entry in table TERMDEV (MAP), trunk numbers 3 to 5 are automatically assigned to the second entry in table TERMDEV (TTP01), and so on.

TRKGRP type MAINT (continued)

Three circuits are required for each TTP or MAP, external trunk numbers 0 to 2 for position 0, 3 to 5 for position 1, and so on.

Trunk group type MAINT and PEC NT2X72AA (four-wire E&M type 1 interface, 600-Ω trunk circuit) is required as input for this trunk group.

No subgroup data is required from the operating company; the trunk subgroup data is automatically produced with default values.

If a digital trunk group is datafilled in table TRKGRP, the default value JACK 1 is automatically datafilled in table TRKSGRP, field SGRPKEY.

LTU (line test unit trunk group)

The line test unit (LTU) trunk group is used in for switches with LTU trunk groups, and is represented in table CLLI by the pseudo-CLLI LTU and in table TRKGRP with the trunk group type MAINT.

Each member of the trunk group consists of an odd-numbered line loop test unit (LTU) with PEC NT2X10AA (line test unit analog) and its associated even-numbered line loop test unit with PEC NT2X11AA (line test unit digital).

Since these two cards always reside in adjacent slots in the remote service or maintenance trunk module and function as one unit, specify only PEC 2X11AA in table TRKGRP.

In a stand-alone switch or host, provision one circuit for each 6400 lines or fraction thereof, plus one. For example, in a switch with 9600 lines, provision 3 circuits.

At each remote site, provision a minimum of one circuit for each 6400 lines.

The LTUs are assigned to horizontals of the metallic test access minibar switch in table MTAHORIZ.

For the NT2X90AB trunk circuit associated with the line test unit, refer to the monitor-and-talk (MONTALK) trunk group.

MONTALK (monitor-and-talk trunk group)

The monitor-and-talk trunk group is required in switches equipped with line test units (LTUs). Refer to TRKGRP(MAINT) pseudo-CLLI LTU. One monitor-and-talk trunk circuit with PEC NT2X90AB (incoming and outgoing test trunk) is used for each line test unit at the stand-alone switch or remote site.

The monitor-and-talk trunk group has a pseudo-CLLI of MONTALK.

Make the trunk circuit number in table TRKMEM the same as its associated LTU number.

MTU (metallic [or multiline] test unit trunk group)

The metallic or multi-line test unit (MTU) is similar to the line test unit (LTU).

If used in a North America switch, the name of the MTU is multi-line test unit and the PEC is NT2X11BA. If used in a non-North American switch, the name of the MTU is metallic test unit controller and the PEC is NT4X97AA.

TERM108 (108 test line trunk group)

The 108 test line is used in switches that are configured for testing echo suppressors.

Each 108 test line circuit consists of two trunk circuits with PEC NT2X88AA (four-wire E&M interface, 600-Ω trunk circuit), and is represented in table CLLI by pseudo-CLLI TERM108.

TTT (trunk test transmission trunk group)

The trunk test transmission (TTT) trunk group is used in switching units with trunk test transmission trunk groups, and is represented in table CLLI by the pseudo-CLLI TTT and in table TRKGRP by trunk group type MAINT.

Each member of the trunk group consists of a test signal generator with PEC NT1X90AA (test signal generator) and its associated PCM-level meter with PEC NT2X96AA (PCM level meter).

Since these two cards always reside in adjacent slots in the maintenance trunk module and function as a single unit, only PEC 2X96AA is specified in table TRKGRP.

No trunk subgroup data is required from the operating company. The trunk subgroup data is automatically produced with default values.

TTU (terminating transmission test unit trunk group)

The terminating transmission test unit (TTU) trunk group is used in switches with terminating transmission test unit trunk groups, and is represented in table CLLI by pseudo-CLLI TTU and in table TRKGRP by trunk group type MAINT.

Each member of the trunk group consists of a control and signal generator, with a PEC of NT2X47AA (transmission test module control signal generator)

TRKGRP type MAINT (continued)

or NT2X47AC (transmission test unit controller), and the associated digital filter with PEC NT2X56AA/AB (transmission test module digital filter).

Since these two cards always reside in adjacent slots in the maintenance trunk module and function as a single unit, only PEC 2X47AA/AC is specified in table TRKGRP.

The NT2X47AC and NT2X56AB cards developed for the Automatic Transmission Measurement System (ATMS) can functionally replace the existing NT2X47AA and NT2X56AA cards. Both pairs of cards can exist in the same switch, however NT2X47AA must be paired with NT2X56AA and NT2X47AC must be paired with NT2X56AB.

Optional feature NTX136AA (Automatic Transmission Measurement System [ATMS]) can be provided in existing switches by adding sufficient cards (NT2X47AC and NT2X56AB) for the ATMS feature.

Existing cards (NT2X47AA and NT2X56AA) do not need to be retrofitted in order to provide the ATMS feature.

Although the ATMS cards can be selected for regular TTU functions, this should be done only if non-ATMS TTU cards are not available.

The ATMS feature can only be provided in switches with feature Automatic Trunk Test.

If the switch has a mixture of NT2X47AA and AC, specify card code NT2X47AA in table TRKGRP.

The trunk subgroup data for subgroup 0 in table TRKSGRP is automatically produced for card NT2X47AA by table control.

All members with card code NT2X47AA are assigned to subgroup 0 (zero) in table TRKMEM.

The CLLI TTU, trunk group type MAINT, and PEC NT2X47AA are required as input for this trunk group.

No subgroup data is required from the operating company. The trunk subgroup data is automatically produced with default values.

Datafill trunks with card code NT2X47AC as follows:

- Assign card NT2X47AC to subgroup 1 and provide the data for table TRKSGRP.
- Assign all members with card code NT2X47AC to subgroup 1 in table TRKMEM.
- Specify the odd-numbered circuit for the trunk card with PEC NT2X47AA or NT2X47AC in table TRKMEM (Although this type of trunk card has only one circuit, with an even circuit number, software requires the odd-numbered circuit [even circuit number + 1] to be specified).

EDTU (enhanced digital test unit)

The enhanced digital test unit (EDTU) NT4X45AA provides a four-channel digital test facility statically allocated to the DTU, TTU and TTU application groups, with no restrictions to any possible combination of these groups.

The EDTU will emulate the DTU, TTU, and TTU groups according to the test that has to be performed and to the datafill. Each EDTU virtual channel will be equivalent to a TTT or a TTU or a virtual DTU channel.

SPARE (spare trunk groups)

All spare trunks in the switch must be listed against a pseudo-CLLI of SPAREXXXXXX, where XXXXXX is the card code of the spare trunk group. For example, if there are spare trunks with a card code of 2X83AA, the CLLI for these spare trunks is SPARE2X83AA in table CLLI.

To change a trunk member from a working group to a spare group, or from a spare group to a working group, see table TRKMEM.

TRKGRP type MAINT (continued)

Datafill

The following table lists the datafill for table TRKGRP type MAINT.

Field descriptions (Sheet 1 of 5)

Field	Subfield or refinement	Entry	Explanation and action
GRPKEY		see subfield	*Group key* This field consists of subfield CLLI.
	CLLI	DCLTONE DTU ESADGTR HSET JACK LTU MONTALK MTU TERM108 TTT TTU or alphanumeric (1 to 16 characters)	*Common language location identifier* Enter one of the following pseudo-CLLIs to specify the maintenance trunk group type required. DCLTONE - dialable cable-locator tone DTU - digital test unit ESADGTR - emergency stand-alone Digitone receiver HSET - position headset JACK - position jack LTU - line test unit MONTALK - monitor-and-talk circuit MTU - multiline test unit (for North American switches) or metallic test unit (for non-North American switches) TERM108 - 108 test line TTT - trunk test transmission TTU - terminating transmission test unit For spare trunk groups, enter the CLLI of the trunk group.
GRPINFO		see subfields	This field consists of subfields GRPTYP, TRAFSNO, PADGRP, NCCLS, and CARD. Refer to section “General field information" in table TRKGRP for information on an alternate structure for this field that results from the datafill of table CUSTFLDS.

Field descriptions (Sheet 2 of 5)

Field	Subfield or refinement	Entry	Explanation and action
	GRPTYP	MAINT	*Group type* Enter MAINT to specify the maintenance group type.
	TRAFSNO	numeric (0 to 127)	*Traffic separation number* Enter the incoming and outgoing traffic separation number assigned to the trunk group. If a traffic separation number is not required, enter 0 (zero). For switches with software package NTX085AA (Traffic Separation Peg Count), enter a value from 1 to the value of office parameter TFAN_OUT_MAX_NUMBER in table OFCENG. For switches without software package NTX085AA, enter a value from 1 to 15. Incoming and outgoing traffic separation numbers 1 to 9 should be reserved for generic traffic separation numbers. For more information, refer to table TFANINT.
	PADGRP	alphanumeric (1 to 5 characters)	*Pad group* Enter the name of the pad group assigned to the trunk group in table PADDATA. For more information, refer to table PADDATA.
	NCCLS	NCBN NCID NCIM NCIT NCLT NCOF NCON NCOT NCRT NCTC or NOSC	*Operational measurements no-circuit class* Enter the operational measurements (OM) no-circuit class (NCCLS) to indicate which OM register is incremented if treatment GNCT (generalized no circuit) occurs. The initial value for this trunk group type is NCRT (no circuit). For pseudo-CLLIs DTU, HSET, JACK, LTU, MTU, TTT, and TTU, there is no generalized no-circuit (GNCT) treatment. Enter NCRT. For more information, refer to the general section of table TRKGRP and the *Operational Measurements Reference Manual*.

TRKGRP type MAINT (continued)

Field descriptions (Sheet 3 of 5)

Field	Subfield or refinement	Entry	Explanation and action
	CARD	1X54AA 2X11AA 2X11BA 2X47AA 2X47AC 2X72AA 2X88AA 2X90AB 2X96AA 4X23AA 4X45AA 4X97AA 5X30AA ESADGT or alphanumeric (1 to 6 characters)	*Card code* This field contains the product engineering code (PEC) of the card required for the specified maintenance trunk group type. Datafill this field as described below: For dialable cable-locator tone, enter 2X90AB (or equivalent). For digital test unit trunk group members, enter 4X23AA.For enhanced digital test unit group members, enter 4X45AA. For emergency stand-alone Digitone receivers, enter ESADGT. For position headset trunk group members, enter 2X72AA, 2X88AA, or 5X30AA. For position jack trunk group members, enter 2X72AA, 1X54AA, or 2X88AA. For line test unit trunk group members, enter 2X11AA. For members of the monitor-and-talk trunk group, enter 2X90AB. For members of the metallic (or multi-line) test unit trunk group, enter 2X11BA if the switch is North American, or 4X97AA if the switch is not North American. For members of the 108 test line trunk group, enter 2X88AA.

TRKGRP type MAINT (continued)

Field descriptions (Sheet 4 of 5)

Field	Subfield or refinement	Entry	Explanation and action
			For members of the trunk test transmission trunk group, enter 2X96AA. Each member of the trunk group consists of a test signal generator with PEC NT1X90AA and its associated PCM-level meter with PEC NT2X96AA. As these two cards always reside in adjacent slots in the maintenance trunk module, and function as one unit, only PEC 2X96AA is specified in table TRKGRP. For members of trunk subgroup 0 of the terminating transmission test unit trunk group, enter 2X47AA or 2X47AC. Each member of the trunk group consists of a control and signal generator with PEC NT2X47AA and its associated digital filter with PEC NT2X56AA. As these two cards always reside in adjacent slots in the maintenance trunk module, and function as one unit, only PEC 2X47AA is specified in table TRKGRP

TRKGRP type MAINT (continued)

Field descriptions (Sheet 5 of 5)

Field	Subfield or refinement	Entry	Explanation and action
			For members of the trunk test transmission trunk group, enter 4X45AA. Each EDTU virtual channel will be equivalent to a TTT, TTU and or a virtual DTU channel. An EDTU may be installed in any slot number on a MTM shelf. The slot to the immediate RIGHT of the EDTU on the MTM shelf must either be left vacant or be equipped with a circuit pack that seizes no trunk enables, such as an EDRAM (NT1X80AA or NT1X80BA) or CTM (NT1X81AA or NT1X81BA). An EDTU may be installed in any slot number higher than 6 on an ISM shelf. The slot to the immediate LEFT of the EDTU on ISM shelf must either be left vacant or be equipped with a circuit pack that seizes no trunk enables, such as an EDRAM (NT1X80AA or NT1X80BA) or CTM (NT1X81AA or NT1X81BA). For members of a spare trunk group, enter the PEC that applies to the trunk group. If office parameter TRK_OOS_CHK_ON in table OFCVAR is set to Y (yes), all trunks in the group must be busy before the value of this field can be changed by data modification order (DMO).

Datafill example

The following example shows sample datafill for table TRKGRP type MAINT.

TRKGRP type MAINT (continued)

MAP display example for table TRKGRP type MAINT

```
GRPKEY                                GRPINFO
_____________________________________________________________

TTT              MAINT 0 IAO   NCRT 2X96AA
JACK             MAINT 0 IAO   NCRT 1X54AA
HSET             MAINT 0 IAO   NCRT 2X72AA
DTU              MAINT 0 IAO   NCRT 4X23AA
TTU              MAINT 0 IAO   NCRT 2X47AA
LTU              MAINT 0 IAO   NCRT 2X11AA
MONTALK          MAINT 0 IAO   NCRT 2X90AB
TERM108          MAINT 0 TLD   NCRT 2X88AA
DCLTONE          MAINT 0 NPDGP NCRT 2X90AB
ESADGTR          MAINT 0 TLD   NCRT ESADGT
SPARE2X83AA      MAINT 0 TLD   NCRT 2X83AA
DTU              MAINT 0 IAO   NCRT 4X45AA
TTU              MAINT 0 IAO   NCRT 4X45AA
LTU              MAINT 0 IAO   NCRT 4X45AA
```

Supplementary information

A dialable cable-locator tone trunk (pseudo-CLLI DCLTONE) is physically connected to a tone generator and uses the following procedure to locate a specific tip-and-ring cable pair:

1. Connect a telephone to any tip-and-ring cable pair.
2. Dial an access code plus the seven-digit directory number (DN) of the line if tone is to be applied.
3. Wait for a busy or confirmation tone.
4. If there is confirmation tone, look for the cable-locator tone on various wire pairs.

The translations to achieve the above result are as follows:

1. Enter the selected access code that applies to the originating line in subtable STDPRTCT.STDPRT.
2. Set field NOPREDIG equal to the number of digits in the access code.

TRKGRP type MAINT (end)

3. Set translation to proceed either directly to CLLI DCLTONE, using PRERTSEL = S, or using table OFRT selector PRTESEL = S and PRERTSEL = T.
4. The switch then uses the seven digits dialed following the access code and if dialed DN is idle, the switch
   a. returns confirmation tone
   b. applies the cable-locator tone for the time specified by office parameter CABLE_LOCATE_TIMEOUT in table OFCENG
   c. sends the call to the appropriate subtable TMTCNTL.TREAT at treatment busy if the dialed DN is busy.

TRKGRP type MTR

International Trunk Group Type

One of the trunk group types used by international extended multiprocessor system (XMS)-based (XPM) peripheral module (IXPM) trunks is metering trunk (MTR). The direction of this trunk group is incoming, outgoing, or two-way. Metering is supported as an option. This trunk group is intended for local or national network traffic.

Translation types

MTR trunk groups have a provision that selects the translation type (for example, North American or universal translations) from the trunk group data.

One of the translation data selectors is an index into table NETATTR. When this selector is used, translation data is datafilled in table NETATTR instead of table TRKGRP.

End-to-end connections

Under certain conditions, an office only needs to collect enough digits to route a call. Once the call has been routed, the outgoing trunk to the next office is seized. A speech path between the incoming and outgoing trunk is connected and a signal is sent back to the previous office, instructing it to resend the digits. The outgoing register of the previous office can then signal to the incoming register of the next office. This situation is shown in the figure “End to end connections”..

If an end-to-end connection cannot be established through an office, the incoming trunk must collect all signals from the previous office and then send the signals out after the connection has been routed to the next office. This mode of operation is referred to as link-by-link or transfer. End-to-end connections set up toll calls faster than link-by-link connections. Whenever possible, the DMS-100I attempts to establish end-to-end connections.

The following list describes when end-to-end connections cannot be established for switching units in China.

- In the automatic toll network, inter-register signals cannot be sent to transit toll exchanges or terminating toll exchanges directly from an originating local exchange. They must be sent from the originating toll exchange.
- In general, inter-register signals cannot be sent to the local terminating exchange by transit toll or originating toll exchanges. They must be sent from the terminating toll exchange.

TRKGRP type MTR (continued)

- In the local network, there are situations when tandem exchanges use transfer mode for transmission quality reasons.
- In the automatic toll network, there are situations when incoming registers of a transit toll exchange must transfer all inter-register signals for transmission quality reasons.

These restrictions mean that end-to-end connections cannot be established at originating toll or terminating toll offices. If an incoming trunk group on a DMS-100I is datafilled with a traffic class of either CAMA (originating toll) or TLLC (terminating toll), then no attempt to establish an end-to-end connection is made.

For other incoming trunks that must not establish end-to-end connections, field TANDEM in table TRKGRP must be set to LNK. With this field value, all incoming trunk circuits belonging to the trunk group (regardless of their traffic class) do not establish end-to-end connections.

End-to-end connections can only be established on incoming trunks with field TRFC in table TRKGRP set to either ITLL, EASV, or NONE, and with field TANDEM set to EEND.

The figure “End to end connections” shows an example of how an end-to-end connection is established. Once office B collects enough digits to route the call, the outgoing trunk from office B to office C is seized. Office B then connects a speech path and tells office A to resend the digits. At this point, the outgoing register at office A is signaling to the incoming register at office C.

End-to-end connections

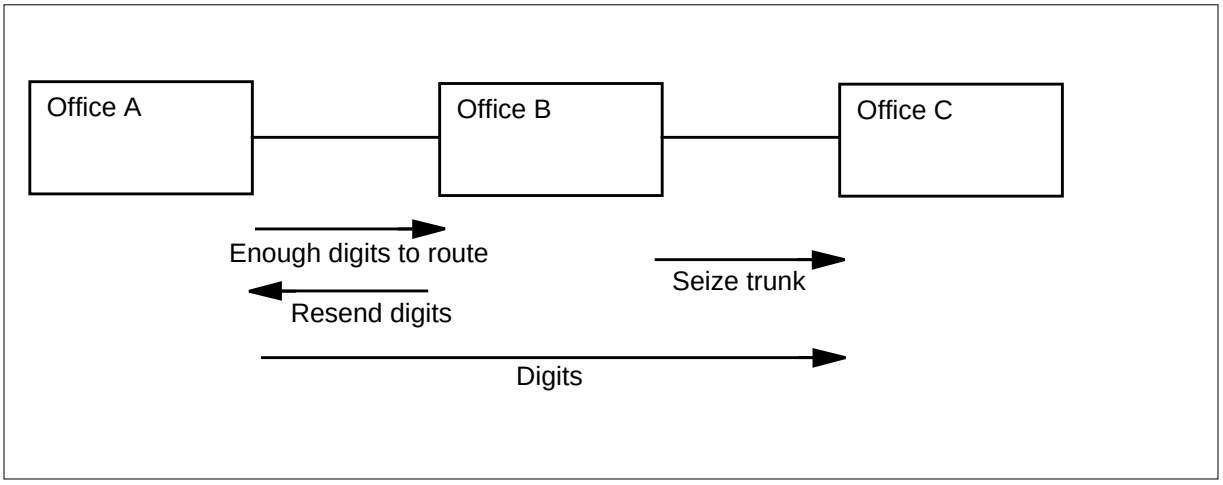

Traffic class

On a DMS100I, field TRFC of the trunk group data can take one of the traffic class values outlined below.

CAMA

Centralized automatic message accounting (CAMA) is used for trunk groups between offices in which the calling subscriber number and KA information can be signaled.

Trunk groups must be datafilled with a traffic class of CAMA whenever the calling subscriber information can be sent or received over a trunk group. In China, it can be used for trunk groups between:

- an originating local office and an originating toll office
- an originating local office and a local/toll office

An outgoing trunk group only sends the calling subscriber information forward in response to an A6 backwards signal if that outgoing trunk group is datafilled with a traffic class of CAMA. If an outgoing trunk group that is datafilled with a traffic class of CAMA receives an A6 backwards signal, it sends forward the following information:

- KA signal (contains calling subscriber category)
- calling subscriber number (office code + station number)
- end-of-digits (I15) signal

Note: In the C1 MFC signaling system, an A6 backwards signal indicates that the outgoing register must send forward a KA signal and the calling subscriber number.

If an outgoing trunk group with a traffic class not datafilled as CAMA receives an A6 backwards signal, then the outgoing trunk group is not able to send the KA signal and calling subscriber number forward. In this situation, only the end-of-digits (I15) signal is sent forward.

If an incoming trunk group is datafilled with a traffic class of CAMA, it does not necessarily send back an A6 signal. It is possible (from a stored program control [SPC] office, for example) to handle local calls over a trunk group datafilled as CAMA.

If an incoming trunk group with a traffic class of CAMA is handling a toll call, then once digit analysis indicates that enough digits have been collected (and translations has enough digits to determine an outgoing route), an A6 signal is sent backwards to the previous office. After the incoming trunk sends the A6

TRKGRP type MTR (continued)

signal, it collects the KA information and the calling subscriber number. Once that information has been collected, the remaining called subscriber number is collected.

> ***Note:*** If translations is not able to determine a route after the first few digits have been reported, more digits are collected until a route can be determined. It is important to datafill the digit analysis and digit translation systems together. If the first few digits that are reported by digit analysis cannot be translated into an outgoing route, the call capacity is affected due to the additional time required to collect enough digits to route the call.

Outgoing trunk groups with a traffic class of CAMA are required to provide extra information to the outgoing register for sending to the next office. Calls made over these trunk groups are slower than calls made over trunk groups with a traffic class other than CAMA.

EASV

Extended area service (EASV) is used for trunk groups that handle local (non-toll) traffic only. Local traffic is traffic that does not go through the toll network.

ITLL

Intertoll (ITLL) is used for trunk groups that carry toll traffic between toll offices. In the C1 MFC signaling system, a KC signal (indicating the priority of the calling subscriber) is sent between offices in the toll network. Some offices use this information for special routing. A traffic class of ITLL on an incoming trunk group indicates to the DMS-100I that a KC signal can be expected in the flow of inter-register signals from the previous office.

If an outgoing trunk group is datafilled with a traffic class of ITLL, it sends the KC information along with the outpulsed digits to the next office (if this office has not established an end-to-end connection). If an incoming trunk group is datafilled with a traffic class of ITLL, then the DMS-100I attempts to establish an end-to-end connection through the office. Both end-to-end and link-by-link connections are described later in this document.

> ***Note:*** This feature does not provide the ability to perform priority routing at a toll office based upon the KC information.

Incoming trunk groups with this traffic class do not attempt to establish end-to-end connections.

TLLC

Toll completion (TLLC) is used for trunk groups that carry traffic from a toll office to a terminating toll office.

TNCA

The tandem CAMA (TNCA) traffic class enables a call to collect the calling party information. It does not enable the call to perform toll billing. A tandem office between a local and a toll office can pass the calling party information without billing occurring at the tandem office. This feature is used in China for malicious call identification.

NONE

Trunk groups must be datafilled with a traffic class of NONE if none of the other traffic classes are applicable. For example, for trunk groups that carry traffic between local offices, use a traffic class of NONE. Similarly, for trunk groups that carry traffic from a terminating toll office to a terminating local office, use a traffic class of NONE.

Digit analysis

On a DMS-100I, digit analysis can be performed on both a trunk group and a line attribute basis.

There are two main tables used for specifying digit analysis: DGHEAD and DGCODE. Each tuple in table DGCODE specifies the type of analysis that is carried out for the digit range given in the key to that tuple. The key for each tuple consists of an instance name and a digit range. The digit range is composed of “from" digits and “to" digits. These digits can be either one or two digits in length. Flexibility is achieved by allowing several separate instances. The names of all instances must be in table DGHEAD. Table DGHEAD is used to associate default values with each instance. The values in DGHEAD are only used if the instance does not appear in table DGCODE.

To associate an incoming trunk with a particular type of analysis, the name of the required instance in table DGHEAD is entered in field DGNAME of table TRKGRP.

By providing digit analysis on a trunk group basis, the DMS-100I is flexible enough to enable trunks coming from one office to use different digit analysis than trunks coming from another office. This system also enables trunks carrying different classes of traffic to use different digit analysis schemes.

Digit regeneration

Field DIGREGEN is used by the incoming and two-way international trunk group MTR to enable the prefixing of incoming digits with up to four numbers. This field contains the digits (maximum four) that require regeneration so that the number dialed in the distant office can be regenerated. If no digits require regeneration, the entry is N (no).

TRKGRP type MTR (continued)

Office parameters

If office parameter TRK_OOS_CHK_ON in table OFCVAR is set to Y (yes), all trunks in the group must be busied prior to changing the value of this field through a data modification order (DMO).

Restarts

The software meters used for trunk metering can survive WARM and COLD restarts. On a RELOAD from image, potential mismatches can occur if the software meter assignment on the image tape differs from that of the switch before the RELOAD occurred. If there is no difference, the software meters survive the RELOAD. If there is a difference, the meter audit logs all meters that do not match the datafill.

Calls do not survive COLD and RELOAD restarts, and are automatically taken down. The software meters are not updated for these calls.

Calls survive WARM restarts. Those calls that terminate after the restart have their software meters updated properly. Those calls that terminate during the restart have their meters updated upon the next usage of the trunk. Since the exact disconnect time is not known, the restart time is used as the disconnect time.

Datafill

The following table lists the datafill for table TRKGRP type MTR.

Field descriptions (Sheet 1 of 4)

Field	Subfield or refinement	Entry	Explanation and action
GRPKEY		see subfield	*Group key* This field consists of subfield CLLI.
	CLLI	alphanumeric (1 to 16 characters)	*Common language location identifier* Enter the common language location identifier (CLLI) code assigned to the trunk group in table CLLI.

TRKGRP type MTR (continued)

Field descriptions (Sheet 2 of 4)

Field	Subfield or refinement	Entry	Explanation and action
GRPINFO		see subfields	*Variable group data* This field consists of subfields GRPTYP, TRAFSNO, PADGRP, NCCLS, SAT, ESUPR, IAA, TANDEM, TRFC, DIR, and refinements of field DIR. Refer to section “General field information" in table TRKGRP for information on an alternate structure for this field that results from the datafill of table CUSTFLDS.
	GRPTYP	MTR	*Group type* Enter MTR to specify the international trunk group type.
	TRAFSNO	numeric (0 to 127)	*Traffic separation number* Enter the incoming and outgoing traffic separation number assigned to the trunk group. If a traffic separation number is not required, enter 0 (zero). For switches with software package NTX085AA (Traffic Separation Peg Count), enter a value from 1 to the value of office parameter TFAN_OUT_MAX_NUMBER in table OFCENG. For switches without software package NTX085AA, enter a value from 1 to 15. Incoming and outgoing traffic separation numbers 1 to 9 should be reserved for generic traffic separation numbers. For more information, refer to table TFANINT.
	PADGRP	alphanumeric (1 to 5 characters)	*Pad group* Enter the name of the pad group assigned to the trunk group in table PADDATA. For more information, refer to table PADDATA.

TRKGRP type MTR (continued)

Field descriptions (Sheet 3 of 4)

Field	Subfield or refinement	Entry	Explanation and action
	NCCLS	NCBN NCID NCIM NCIT NCLT NCOF NCON NCOT NCRT NCTC or NOSC	*Operational measurements no-circuit class* Enter the operational measurements (OM) no-circuit class (NCCLS) to indicate which OM register is incremented if treatment GNCT (generalized no circuit) occurs. If trunk direction is incoming (IC), this field is not required. Enter NCRT. The initial value for this trunk group type is NCRT (no circuit). For more information, refer to the general section of table TRKGRP and the *Operational Measurements Reference Manual* .
	SAT	Y or N	*Satellite* Enter Y (yes) if the trunk group is set up to switch through satellite. Otherwise, enter N (no).
	ESUPR	Y or N	*Echo suppressor* If the trunk sub-group has echo suppressors, enter Y. Otherwise, enter N.
	IAA	Y or N	*Inter-administration accounting* Inter-administration accounting (IAA) provides the operating company with the call details to facilitate revenue accounting back to the originating administration. Enter Y if IAA recording is required for this trunk group. Otherwise, enter N to indicate that no IAA recording is required. If the office parameter IAA_REQUESTED in table OFCVAR is set to Y, only calls over trunks with IAA equal to Y are recorded. If the parameter is set to N, no IAA records are generated.

Field descriptions (Sheet 4 of 4)

Field	Subfield or refinement	Entry	Explanation and action
	TANDEM	EEND or LNK	*Tandem mode* Enter EEND (end-to-end operation), if end-to-end connections are enabled over the trunk group. Enter LNK (link-by-link operation), if end-to-end connections are not enabled over the trunk group. End-to-end connections are only applicable to R2 MFC signaling trunk groups. For non-R2 MFC signaling trunk groups, this field is not used by the system.
	TRFC	CAMA, EASV, ITLL, TLLC, TNCA, or NONE	*International traffic class* Enter the type of traffic that is expected to flow through this trunk group. The types of traffic classes are: CAMA - Centralized automatic message accounting is the traffic class for trunk groups if the calling subscriber digits are signaled between switching units. EASV - Extended area service is the traffic class for trunk groups that handle local (non-toll) traffic only. ITLL - Intertoll is the traffic class for trunk groups that carry traffic in the toll network. TLLC - Toll-completion is the traffic class for trunk groups that carry traffic between a toll switching unit and a terminating toll switching unit. TNCA - Tandem CAMA is the traffic class used to collect the calling party information, but not to perform toll billing. It is used in China for malicious call identification. NONE - is the traffic class used for trunk groups that do not belong to one of the other traffic classes, or for a trunk group to which traffic class is not applicable.

TRKGRP type MTR (continued)

Incoming international trunk groups

For incoming international trunk groups, datafill field DIR and refinements as described below.

Field descriptions for conditional datafill

Field	Subfield or refinement	Entry	Explanation and action
	DIR	IC	*Direction* Enter IC to specify the trunk group direction as incoming.
	MCTANI	Y or N	*Forward ANI enable* Enter Y to indicate that on malicious call trace (MCT) calls connected to trunks that do not already send DN and CATEGORY, a backwards request for DN or CATEGORY is required. Enter N to indicate that on MCT calls connected to trunks that do not already send DN and CATEGORY, a backwards request for DN or CATEGORY is not required. This option is applicable for R2 calls only.
	XLAD	see subfield	*Variable translation data* This field consists of subfield XLADSEL and (dependent on the entry in XLADSEL) appropriate translation data as described below.
	XLADSEL	UNIV NETATTR or NALT	*Translation selector* If the universal translation system is used, enter UNIV and datafill subfields XLASYS and XLANAME. If this table indexes into table NETATTR, enter NETATTR and datafill subfield NETINDX. If the North American translation system is used, enter NALT and datafill subfields PRTNM, SCRNCL, SNPA, and ORIGSRC.

DIR = IC and XLADSEL = UNIV

For incoming trunk groups with a value of UNIV in field XLADSEL, datafill subfields XLASYS and XLANAME as described below, then datafill fields

MTRIC, DIGREGEN, and DGNAME as described in "DIR = IC and XLADSEL = UNIV, NETATTR, or NALT" on page -448.

Field descriptions for conditional datafill

Field	Subfield or refinement	Entry	Explanation and action
	XLASYS	AC, CT, CTY, DN, FA, FT, NSC, OFC, PX, or NIL	*Translation system* Enter the head table name from which translations begin. Entry values other than those listed are not valid.
	XLANAME	alphanumeric (1 to 8 characters) or NIL	*Translation name* Enter a name from the code table that belongs to the head table referenced by field XLASYS.

DIR = IC and XLADSEL = NETATTR

For incoming trunk groups with a value of NETATTR in field XLADSEL, datafill subfield NETINDX as described below, then datafill fields MTRIC, DIGREGEN, and DGNAME as described in "DIR = IC and XLADSEL = UNIV, NETATTR, or NALT" on page -448..

Field descriptions for conditional datafill

Field	Subfield or refinement	Entry	Explanation and action
	NETINDX	numeric (0 to 1023)	*Network attribute index* Enter a valid network attribute index from table NETATTR. No other translation data is required, since it is available in table NETATTR.

DIR = IC and XLADSEL = NALT

For incoming trunk groups with a value of NALT in field XLADSEL, datafill subfields PRTNM, SCRNCL, SNPA, and ORIGSRC as described below, then

TRKGRP type MTR (continued)

datafill fields MTRIC, DIGREGEN, and DGNAME as described in "DIR = IC and XLADSEL = UNIV, NETATTR, or NALT" on page -448..

Field descriptions for conditional datafill (Sheet 1 of 2)

Field	Subfield or refinement	Entry	Explanation and action
	PRTNM	alphanumeric (1 to 4 characters) or NPRT	*Standard pretranslator name* If standard pretranslation is required, enter the name of the standard pretranslator defined in table STDPRTCT to which digit translation is to route after the receipt of the first digit. If pretranslation is not required, enter NPRT (no pretranslation). If office parameter TRK_OOS_CHK_ON in table OFCVAR is set to Y (yes), all trunks in the group must be busy before the value of this field can be changed by data modification order (DMO).
	SCRNCL	alphanumeric (1 to 32 characters) or NSCR	*Class-of-service screening table name* If class-of-service screening is required, enter the name of the class-of-service screening table (datafilled in table SCRNCLAS) to which digit translation routes. If class-of-service screening is not required, enter NSCR (no screening).

Field descriptions for conditional datafill (Sheet 2 of 2)

Field	Subfield or refinement	Entry	Explanation and action
	SNPA	numeric (3 digits)	*Serving numbering plan area* Enter the code in table HNPACODE to which translation routes for digit translation. If office parameter TRK_OOS_CHK_ON in table OFCVAR is set to Y, all trunks in the group must be busy before the value of this field can be changed by DMO.
	ORIGSRCE	LCL or NLCL	*Originating source* Enter the originating source of the call, LCL (local) or NLCL (non-local). The originating source determines, for the code dialed, whether the call is routed or blocked by the code type in the HNPACODE subtable. For more information, refer to the “Notes on originating source" section in table HNPACONT.HNPACODE.

DIR = IC and XLADSEL = UNIV, NETATTR, or NALT

For all incoming trunk groups, datafill subfields MTRIC, DIGREGEN, and DGNAME as described below, then datafill fields PROTIDX and TRTMTIDX as described in "Incoming, outgoing, and two-way trunks" on page -458.

Field descriptions for conditional datafill (Sheet 1 of 2)

Field	Subfield or refinement	Entry	Explanation and action
	MTMTRIC	see subfields	*Meter incoming information* This field consists of subfields METERIC and MDI.
	METERIC	Y or N	*Meter option* If metering is desired, enter Y (yes) and datafill subfield MDI. If metering is not required, enter N (no). The value in field METERIC cannot be changed to N once it has the value Y.

TRKGRP type MTR (continued)

Field descriptions for conditional datafill (Sheet 2 of 2)

Field	Subfield or refinement	Entry	Explanation and action
	MDI	numeric (0 to 1023)	*Metering data index* If the entry in field METERIC is Y, enter an appropriate metering data index from table MSRCDATA. If the entry in field METERIC is N, leave field MDI blank.
	DIGREGEN	0 to 9 (up to 4 digits) or N	*Digit regeneration* Enter the digits (maximum four) to prefix to the incoming digits so that the number in the distant office can be regenerated. If no prefix digits are required, enter N (none).
	DGNAME	alphanumeric (1 to 8 characters) or NIL	*Digit collection name* Enter the digit analysis instance required for an incoming trunk group. The digit analysis instance must have been previously defined in table DGHEAD. Enter NIL if no digit analysis is required.

Two-way international trunk groups

For two-way international trunk groups, datafill field DIR and refinements as described below.

Field descriptions for conditional datafill

Field	Subfield or refinement	Entry	Explanation and action
	DIR	2W	*Direction* Enter 2W to specify the trunk group direction as two-way.
	MCTANI	Y or N	*Forward ANI enable* Enter Y to indicate that on malicious call trace (MCT) calls connected to trunks that do not already send DN and CATEGORY, a backwards request for DN or CATEGORY is required. Enter N to indicate that on MCT calls connected to trunks that do not already send DN and CATEGORY, a backwards request for DN or CATEGORY is not required. This option is applicable for R2 calls only.
	XLAD	see subfield	*Variable translation data* This field consists of subfield XLADSEL and (dependent on the entry in XLADSEL) appropriate translation data as described below.
	XLADSEL	UNIV NETATTR or NALT	*Translation selector* If the universal translation system is used, enter UNIV and datafill subfields XLASYS and XLANAME. If this table indexes into table NETATTR, enter NETATTR and datafill subfield NETINDX. If the North American translation system is used, enter NALT and datafill subfields PRTNM, SCRNCL, SNPA, and ORIGSRC.

DIR = 2W and XLADSEL = UNIV

For two-way trunk groups with a value of UNIV in field XLADSEL, datafill subfields XLASYS and XLANAME as described below, then datafill fields MTRIC, SELSEQ, MTROG, DIGREGEN, ANIIDX, and DGNAME as

TRKGRP type MTR (continued)

described in "DIR = IC and XLADSEL = UNIV, NETATTR, or NALT" on page -448.

Field descriptions for conditional datafill

Field	Subfield or refinement	Entry	Explanation and action
	XLASYS	AC, CC, CT, CTY, DN, FA, FT, NSC, OFC, PX, or NIL	*Translation system* Enter the head table name from which translations begin. Entry values other than those listed are not valid.
	XLANAME	alphanumeric (1 to 8 characters) or NIL	*Translation name* Enter a name from the code table that belongs to the head table referenced by field XLASYS.

DIR = 2W and XLADSEL = NETATTR

For two-way trunk groups with a value of NETATTR in field XLADSEL, datafill subfield NETINDX as described below, then datafill fields MTRIC, SELSEQ, MTROG, DIGREGEN, ANIIDX, and DGNAME as described in "DIR = 2W and XLADSEL = UNIV, NETATTR, or NALT" on page -453.

Field descriptions for conditional datafill

Field	Subfield or refinement	Entry	Explanation and action
	NETINDX	numeric (0 to 1023)	*Network attribute index* Enter a valid network attribute index from table NETATTR. No other translation data is required, since it is available in table NETATTR.

DIR = 2W and XLADSEL = NALT

For two-way trunk groups with a value of NALT in field XLADSEL, datafill subfields PRTNM, SCRNCL, SNPA, and ORIGSRC as described below, then datafill fields MTRIC, SELSEQ, MTROG, DIGREGEN, ANIIDX, and

DGNAME as described in "DIR = 2W and XLADSEL = UNIV, NETATTR, or NALT" on page -453.

Field descriptions for conditional datafill

Field	Subfield or refinement	Entry	Explanation and action
	PRTNM	alphanumeric (1 to 4 characters) or NPRT	*Standard pretranslator name* If standard pretranslation is required, enter the name of the standard pretranslator defined in table STDPRTCT to which digit translation is to route after the receipt of the first digit. If pretranslation is not required, enter NPRT (no pretranslation). If office parameter TRK_OOS_CHK_ON in table OFCVAR is set to Y (yes), all trunks in the group must be busy before the value of this field can be changed by data modification order (DMO).
	SCRNCL	alphanumeric (1 to 32 characters) or NSCR	*Class-of-service screening table name* If class-of-service screening is required, enter the name of the class-of-service screening table (datafilled in table SCRNCLAS) to which digit translation routes.
	SNPA	numeric (3 digits)	*Serving numbering plan area* Enter the code in table HNPACODE to which translation routes for digit translation. If office parameter TRK_OOS_CHK_ON in table OFCVAR is set to Y, all trunks in the group must be busy before the value of this field can be changed by DMO.
	ORIGSRCE	LCL or NLCL	*Originating source* Enter the originating source of the call, LCL (local) or NLCL (nonlocal). The originating source determines, for the code dialed, whether the call is routed or blocked by the code type in the HNPACODE subtable. For more information, refer to the “Notes on originating source" section in table HNPACONT.HNPACODE.

TRKGRP type MTR (continued)

DIR = 2W and XLADSEL = UNIV, NETATTR, or NALT

For all two-way trunk groups, datafill subfields MTRIC, SELSEQ, MTROG, DIGREGEN, ANIIDX, and DGNAME as described below, then datafill fields PROTIDX and TRTMTIDX as described in "Incoming, outgoing, and two-way trunks" on page -458..

Field descriptions for conditional datafill (Sheet 1 of 3)

Field	Subfield or refinement	Entry	Explanation and action
	MTMTRIC	see subfields	*Meter incoming information* This field consists of subfields METERIC and MDI.
	METERIC	Y or N	*Meter option* If metering is desired, enter Y (yes) and datafill subfield MDI. If metering is not required, enter N (no). The value in field METERIC cannot be changed to N once it has the value Y.
	MDI	numeric (0 to 1023)	*Metering data index* If the entry in field METERIC is Y, enter an appropriate metering data index from table MSRCDATA. If the entry in field METERIC is N, leave field MDI blank.

Field descriptions for conditional datafill (Sheet 2 of 3)

Field	Subfield or refinement	Entry	Explanation and action
	SELSEQ	ASEQ CCWCTH CWCTH DSEQLIDL or MIDL	*Select sequence*If the trunk is two-way and the far end is a link list switcher, enter LIDL (least idle) or MIDL (most idle) if the far end is MIDL or LIDL respectively. If the trunk is two-way, the far end is not a link list switcher, and sequential selection does not apply, enter MIDL to satisfy the table editor. If the trunk group is two-way, the far end is not a link list switcher, and sequential selection applies (feature package NTX244AB (Enhanced Sequential Trunk Hunting) must be present), enter • CWCTH for clockwise or CCWCTH for counter clockwise circular trunk hunting (starting from the most recently released trunk in the trunk group and based on the order of trunk members in table TRKMEM) for a far end of CCWCTH or CWCTH respectively, or • ASEQ or DSEQ for ascending or descending sequential selection (based on the order of trunk members in table TRKMEM) for a far end of DSEQ or ASEQ respectively. ***Note:*** Refer to the general section of table TRKGRP for additional information on field SELSEQ and for information on changing a trunk group selection method and sequence.
Note: The selection sequence for an existing trunk group can be changed from ASEQ to DSEQ, or from DSEQ to ASEQ, if all the members are made installation busy (INB) or unequipped (UNEQ). The selection method for an existing trunk group cannot be changed. To change the selection method for an existing trunk group from ASEQ or DSEQ to CWCTH or CCWCTH, or to MIDL or LIDL, define a new trunk group, as follows: Create a new trunk group with the required trunk selection method, delete the individual trunks from the old trunk group, and add the trunks to the new trunk group.			
	MTROG	see subfields	*Mete r outgoing information* This field consists of subfields METEROG and MDI.

TRKGRP type MTR (continued)

Field descriptions for conditional datafill (Sheet 3 of 3)

Field	Subfield or refinement	Entry	Explanation and action
	METEROG	N	*Meter option* Enter N. Metering is not allowed on two-way MTR trunks.
	MDI	leave blank	*Metering data index* This field is left blank. Datafill for subfield MDI is only required if the entry in METEROG is Y.
	DIGREGEN	0 to 9 (up to 4 digits) or N	*Digit regeneration* Enter the digits to prefix to the incoming digits so that the number in the distant office can be regenerated. If no digits are to be prefixed, enter N (none).
	ANIIDX	alphanumeric (1 to 8 characters)or NIL	*Fixed automatic number identification index* Enter the index into table FIXEDANI for this trunk group. If datafilled, automatic number identification (ANI) is taken from table FIXEDANI rather than the calling party. For trunks with a traffic class other than CAMA or TNCA, enter the value NIL.
	DGNAME	alphanumeric (1 to 8 characters) or NIL	*Digit collection name* Enter the digit analysis instance required for an incoming trunk group. The digit analysis instance must have been previously defined in table DGHEAD. Enter NIL if no digit analysis is required.

Outgoing international trunk groups

For outgoing international trunk groups, datafill field DIR and refinements as described below, and then datafill fields PROTIDX and TRTMTIDX as described in "Incoming, outgoing, and two-way trunks" on page -458.

Field descriptions for conditional datafill (Sheet 1 of 2)

Field	Subfield or refinement	Entry	Explanation and action
	DIR	OG	*Direction* Enter OG to specify the trunk group direction as outgoing.
	SELSEQ	ASEQ CCWCTH CWCTH DSEQLIDL or MIDL	*Select sequence* If the trunk is two-way and the far end is a link list switcher, enter LIDL (least idle) or MIDL (most idle) if the far end is MIDL or LIDL respectively. If the trunk is two-way, the far end is not a link list switcher, and sequential selection does not apply, enter MIDL to satisfy the table editor. If the trunk group is two-way, the far end is not a link list switcher, and sequential selection applies (feature package NTX244AB (Enhanced Sequential Trunk Hunting) must be present), enter • CWCTH for clockwise or CCWCTH for counter clockwise circular trunk hunting (starting from the most recently released trunk in the trunk group and based on the order of trunk members in table TRKMEM) for a far end of CCWCTH or CWCTH respectively, or • ASEQ or DSEQ for ascending or descending sequential selection (based on the order of trunk members in table TRKMEM) for a far end of DSEQ or ASEQ respectively. ***Note:*** Refer to the general section of table TRKGRP for additional information on field SELSEQ and for information on changing a trunk group selection method and sequence.

TRKGRP type MTR (continued)

Field descriptions for conditional datafill (Sheet 2 of 2)

Field	Subfield or refinement	Entry	Explanation and action
Note: The selection sequence for an existing trunk group can be changed from ASEQ to DSEQ, or from DSEQ to ASEQ, if all the members are made installation busy (INB) or unequipped (UNEQ). The selection method for an existing trunk group cannot be changed. To change the selection method for an existing trunk group from ASEQ or DSEQ to CWCTH or CCWCTH, or to MIDL or LIDL, define a new trunk group, as follows: Create a new trunk group with the required trunk selection method, delete the individual trunks from the old trunk group, and add the trunks to the new trunk group.			
	MTROG	see subfields	*Meter outgoing information* This field consists of subfields METEROG and MDI.
	METEROG	N	*Meter option* Enter N. Metering is not allowed on outgoing MTR trunks.
	MDI	leave blank	*Metering data index* This field is left blank. Datafill for subfield MDI is only required if the entry in METEROG is Y.
	ANIIDX	alphanumeric (1 to 8 characters) or NIL	*Fixed automatic number identification index* Enter the index into table FIXEDANI for this trunk group. If datafilled, automatic number identification (ANI) is taken from table FIXEDANI rather than the calling party. For trunks with a traffic class other than CAMA or TNCA, enter the value NIL.

Incoming, outgoing, and two-way trunks

For all incoming, outgoing, or two-way trunks, datafill fields PROTIDX and TRTMTIDX as described below.

Field descriptions for conditional datafill

Field	Subfield or refinement	Entry	Explanation and action
	PRPROTIDX	BELR2 BRAR2 CHILER2 CHIR2 GUYR2 HAITIR2 IRER2L IRER2T MEXR2 MEXR2B MORR2L MORR2T PERU1R2 SOCR24 SOCR26 SOCR26A SOCR27 or NIL	*R2 protocol index* This field references table indices in table R2PROT that are required by this trunk group for R2 signal/activity mappings and control. All valid entries are five to eight alphanumeric characters in length, with the characters prior to R2 corresponding to the target area. T or L after the characters R2 indicates that the protocol is for toll or local calls respectively. Enter the required R2 protocol for the trunk, or enter NIL if the trunk group does not use R2 signaling. Entry values other than those listed are not valid.
	TRTMTIDX	BELTRT BRATRT CHILETRT CHITRT GUYTRT HAITITRT MEXTRT MORTRTL MORTRTT PERUTRT SOCTRTL SOCTRTT or NIL	*R2 treatment index* This field references table indices in tables TRTMTACT (treatment to activity) and TRTTRTMT (activity to treatment) required by this trunk group. All valid entries are six to eight alphanumeric characters in length, with the characters prior to TRT corresponding to the target area. T or L after the characters TRT indicates that the treatment is for toll or local calls respectively. Enter the required R2 treatment for the trunk, or enter NIL if the trunk group does not use R2 signaling. Entry values other than those listed are not valid.

TRKGRP type MTR (continued)

Datafill example

An example of datafill for table TRKGRP and trunk group type MTR is shown below. This example consists of datafill for one incoming trunk group and one outgoing trunk group with the following characteristics:

- The code in table CLLI for the outgoing trunk group is OGTOBKA and the code for the incoming trunk group is ICFRBKA.
- The traffic separation number for the outgoing trunk group is 10 and for the incoming trunk group is 0.
- ELOA is the pad group assigned to both trunk groups.
- NCRT is the no circuit class for both trunk groups.
- Neither trunk group is set up to switch through satellite.
- Neither trunk group has echo suppressors.
- Both trunks require inter-administration accounting.
- End-to-end connections are enabled.
- International traffic class is not used (NONE is entered).
- The direction for the outgoing trunk group is OG and for the incoming trunk group is IC.
- Backward requests for DN and CATEGORY are not made on the incoming trunk group.
- Both trunk groups use the universal translator.
- The translation for the incoming trunk group starts in the prefix translation table.
- The translation name for the incoming trunk group is ICTOLLCN.
- Neither trunk group uses metering.
- No digit prefixing is done for the incoming trunk group.
- The outgoing trunk group selection sequence is most idle.
- The fixed ANI index option is not used for the outgoing trunk group.
- Digit collection name is not required.
- For both trunk groups, the protocol index is MEXR2 and the treatment index is MEXTRT.

TRKGRP type MTR (end)

MAP display example for table TRKGRP type MTR

```
GRPKEY            GRPINFO
_____________________________________________________________________________
OGTOBKA           MTR 10 ELOA NCRT N N Y EEND NONE OG UNIV
 N MIDL N NIL NIL MEXR2 MEXTRT $
ICFRBKA           MTR 0 ELOA NCRT N N Y EEND NONE IC N UNIV
 PX ICTOLLCN N N NIL MEXR2 MEXTRT $
```

TRKGRP (ONAL trunk group type)

Table name

TRKGRP (ONAL trunk group type) table

Functional description

Table TRKGRP (ONAL trunk group type) defines ways of connecting a UCS DMS-250 switch to the line side of a class 5 central office. The UCS DMS-250 basic end office supports originating, terminating, and two-way access to and from the CO over a ground start (FXOGS) arrangement. In a loop start (FXOLS) arrangement, only terminating access to a CO is supported.

An ONAL may be designated as a virtual private network (VPN) or non-VPN call. When a customer accesses the UCS DMS-250 switch on a VPN ONAL, digits are collected and passed on to the network communication service (NCS) process. The NCS translates the digits and return destination information and/or some action (such as, block the call) as defined by the NCS databases. A VPN customer can place three different types of calls on ONAL trunks: 10 digit DDD, IDDD, and 7- or 10- digit VPN.

If the switch is the carrier, trunk group table ONAL is used to record input data for ONAL trunk groups.

Field descriptions

The following table describes field names, subfield names, and valid data ranges for table TRKGRP (ONAL trunk group type).

(Sheet 1 of 14)

Field	Subfield or refinement	Entry	Explanation and action
GRPKEY		Valid CLLI datafilled in table CLLI	GROUP KEY. Enter the CLLI names used to identify the ONAL trunk group type.
GRPTYP		ONAL	GROUP TYPE. Enter the trunk group type ONAL.

TRKGRP (ONAL trunk group type) (continued)

(Sheet 2 of 14)

Field	Subfield or refinement	Entry	Explanation and action
TRAFSNO		0 to 127	TRAFFIC SEPARATION NUMBER. Select entry as follows: • If the switch has the optional traffic separation software, enter the outgoing traffic separation number, 1-127, assigned to intersection. • If traffic separation is not required, enter zero. • If the switch has software package that includes the Traffic Separation Peg Count feature package, the range of values for the outgoing traffic separation numbers are dependent upon parameter TFAN_OUT_MAX_NUMBER in the OFCENG table. • For a switch without the Traffic Separation Peg Count feature package, the range of values for the traffic separation numbers is 0-15. • It is recommended that outgoing traffic separation numbers 1 through 9 be reserved for generic traffic separation numbers. Further information concerning traffic separation numbers can be found in table TFANINT.
PADGRP		NPDGP or valid pad group from table PADDATA	PAD GROUP. Enter the pad group name if pad groups are defined in table PADDATA. Enter NPDGP (fixed loss plan) if no pad group is required.

TRKGRP (ONAL trunk group type) (continued)

(Sheet 3 of 14)

Field	Subfield or refinement	Entry	Explanation and action
NCCLS		NCRT, NCTC, NCLT, NOSC, NCBN, NCID, NCOT, NCIT, NCIM, NCON, NCOF	NO CIRCUIT CLASS TYPE. Upon exhausting the route list, No Circuit Onnet Trunk (NCON) defines the No Circuit Class OM (in group OFZ2) to peg when group is the last element in the route list. Enter one of the following types: • NCRT=no circuit • NCTC=no circuit toll completing trunk • NCLT=no circuit local tandem trunk • NOSC=no circuit service circuit trunk • NCBN=no circuit business network trunk • NCID=no circuit inward dial • NCOT=no circuit other trunk • NCIT=no circuit intertoll trunk • NCIM=no circuit intermachine trunk • NCON=no circuit on-network trunk • NCOF=no circuit off-network trunk
GRPINFO		see refinements	GROUP INFORMATION. Datafill the ONAL trunk group type refinements.
	COS	0 to 119	CLASS OF SERVICE. Enter the class of service code that is used in screening the calls.
	DIR	IC, OG, or 2W	DIRECTION. Enter IC (incoming), OG (outgoing), or 2W (2-way) to define the direction of traffic flow.
	PRTNM	NPRT or valid pretranslator datafilled in table STDPRTCT	STANDARD PRETRANSLATOR TABLE NAME. Enter a 4-pretranslator name, if standard pretranslation is required. Enter NPRT for no pretranslation. ***Note:*** This name is datafilled in table STDPRTCT.

TRKGRP (ONAL trunk group type) (continued)

(Sheet 4 of 14)

Field	Subfield or refinement	Entry	Explanation and action
	SELSEQ	LIDL, MIDL, ASEQ, DSEQ, CWCTH, CCWCTH, WIDEBAND	SELECT SEQUENCE. Enter one of the following: LIDL, MIDL, ASEQ, DSEQ, CWCTH, CCWCTH, or WIDEBAND. • Enter Least Idle (LIDL) for a 2-way trunk group with a far-end link list switch with most idle select sequence. • Enter most idle (MIDL) for a 2-way trunk group with a far-end link switch with least idle select sequence, or far end is not a link list switch, or trunk group direction is incoming or outgoing. • Enter ascending sequence (ASEQ) to use a trunk group member immediately following the last trunk member chosen. • Enter descending sequence (DSEQ) to select a trunk group member immediately preceding a trunk group member in use is the next trunkmember chosen. • Enter clockwise circular trunk hunting (CWCTH) to start a clockwise, circular search of the route list starting at the most recently released (MRR) trunk. The MRR reference point changes constantly. The search selects the first idle trunk. • Enter counterclockwise circular trunk hunting (CCWCTH) to start a counterclockwise, circular search of the route list starting at the MRR trunk. The search selects the first idle trunk. • Enter wideband (WIDEBAND) to enable the trunk group to handle wideband calls.
	ODSCFLTR	5 to 255	ORIGINATING DISCONNECT FILTER. Enter the minimum amount of time in 10-millisecond increments that the UCS DMS-250 switch observes a sustained on-hook (disconnect) signal from the originating central office before declaring disconnect.

TRKGRP (ONAL trunk group type) (continued)

(Sheet 5 of 14)

Field	Subfield or refinement	Entry	Explanation and action
	ORIGFLTR	5 to 255	ORIGINATION FILTER. Enter the minimum amount of time in 10-millisecond increments that the UCS DMS-250 switch observes origination (ground on tip conductor) from a central office before declaring origination.
	TDSCFLTR	5 to 255	TERMINATING DISCONNECT FILTER. Enter the minimum amount of time in 10-millisecond increments that the UCS DMS-250 switch observes on-hook before declaring disconnect.
	CONNGNPA	numeric or NIL	CONNECTING NPA. Enter the 3-digit primary NPA code of the terminating switch when the trunk group is outgoing or 2-way. When the trunk group is incoming, enter NIL.
	DELAYATD	1 to 100	DELAY AUDIO TONE DETECTION. Enter the amount of time (in 160 ms) that an audio tone detector (ATD) is to wait after outpulsing before enabling itself. ATDANS and DELAYATD are relevant only on outgoing or two-way trunks.
	IRINGCHK	Y or N	INCOMING RING CHECK. If the trunk group is incoming or two-way and ringing is required for seizure, enter Y. If the trunk group is outgoing, enter N.

TRKGRP (ONAL trunk group type) (continued)

(Sheet 6 of 14)

Field	Subfield or refinement	Entry	Explanation and action
	TRAFCLS	NIL, LINE, INTERCEPT, REPAIR, XX, IR, CA, DD, IA, IE, IT, LW, MN, MT, OA, RC, SP, TC, TE, TG, TM, TO, TS, TT, TW, AL, AN, CB, CD, CP, CS, DA, DS, IN, MA, MB, NT, OF, OW, PS, RR, RS, SC, SO, TA, TI, TK, TP, VC, VR, WE, MI, ON, BL, IM, OT, DL, DB, ID	TRAFFIC CLASS. Enter the traffic usage class where the trunk group is assigned. This field is not used by UCS DMS-250 switch software, but is provided for the convenience of operating companies who wish to associate their own traffic class code with each trunk group.
	AUTHDIAL	0 to 15	AUTHORIZATION CODE DIALED. Enter the number of dialed digits required for a valid authorization code. Enter 0 for a completely filed authorization code. ***Note:*** Authorization codes can be completely dialed, completely filed, partially dialed, and partially filed.
	DIALTONE	C, N, S	DIALTONE. Enter C if dialtone applied toward the subscriber is carrier dialtone (400 Hz). Enter S if standard dialtone is applied (350 + 440 Hz). Enter N if no dialtone is required.

TRKGRP (ONAL trunk group type) (continued)

(Sheet 7 of 14)

Field	Subfield or refinement	Entry	Explanation and action
	FASTIDGT	2 to 30	FAST INTERDIGITAL TIME. Enter the fast interdigital time. Fast interdigital timing is used for international dialing. A minimum and maximum number of digits to collect is specified in the Standard Pretranslator table STDPRTCT for IDDD calls. (Refer to subtable STDPRT in this document for further information.) The UCS DMS-250 switch uses the Partial Dial Timing parameter specified in table TRKSGRP for the minimum required digits and uses the fast interdigital timing value for the remaining digits. This field is only used as a digit collection timer if the STDPRTCT selector IN is used. Table TRKSGRP digit collection timer PARTDIAL is used if the operating company personnel use selector IP in table STDPRTCT.
	OPART	0 to 999	ORIGINATING PARTITION. Enter the originating partition number to be associated with the trunk group and translated to a serving translation scheme (STS) for region code screening.
	RECALLDT	AUTO, MANUAL, NONE	RECALL DIALTONE. Enter one of the following: • AUTO. For the subscriber to automatically receive dialtone after the initial called party disconnect or upon completion of a treatment. • MANUAL. Dialing an octothorpe (#) or an asterisk (*) can reoriginate dialtone. • NONE. Indicates neither MANUAL nor AUTO recall dialtone is used. NONE is the default.

TRKGRP (ONAL trunk group type) (continued)

(Sheet 8 of 14)

Field	Subfield or refinement	Entry	Explanation and action
	SNPA	000 to 999 or NIL	SERVING NUMBERING PLAN. Enter the required number for incoming trunk groups. Enter NIL for outgoing trunk groups. The SNPA is prefixed to the dialed number when a local subscriber dials a local 7-digit number that needs the NPA for outpulsing. This situation occurs if the operating company uses code type LRTE in HNPACODE.
	TIMEBIAS	-12 to 12	TIMEBIAS. Enter the timebias. If the originating trunk group and the UCS DMS-250 switch are in different time zones, specify in one-hour increments the time difference between them. This shows the subscriber's true origination time, which is needed to apply the restricted usage by date and time feature (for example, if a call originates in California and enters the UCS DMS-250 switch in Texas, the TIMEBIAS is -2 hours). Enter zero if there is no time zone difference.
	VAUTHFLD	Vector of up to 15 digits or NOAUTHS	AUTHORIZATION CODE. Enter the authorization code digits to file with the trunk group. Enter NOAUTHS when the authorization code digits are not filed within the trunk group.
	ZEROMPOS	NONE, or valid position datafilled in table POSITION	ZERO MINUS POSITION. Enter the position in the POSITION table that is used to route Zero Minus (0-) calls on this trunk group. Enter NONE if 0- calls are not routed on this trunk group.
	ZONE	0 to 9, A, B, C, AUTO	ZONE. Enter a zone type number. Use this field to calculate if looparound IMTs with echo canceller are needed. Add the ZONE number assigned to the originating trunk group to the ZONE number assigned to the first choice in the terminating route list.

TRKGRP (ONAL trunk group type) (continued)

(Sheet 9 of 14)

Field	Subfield or refinement	Entry	Explanation and action
	AUTHFRST	Y or N	AUTHCODE FIRST. Enter the following: • Y, if the authorization code comes before the dialed number (EN). • N, if the authorization codes come after the DN.
	ADIN	0 to 99	AUTHCODE DATABASE INDEX NUMBER. Enter the ADIN index number. This field indexes into the AUTHCODE table. Enter 0 for the default value.
	PANIVAL		PANI VALUE. Enter one of the following PANI formats: AUTHANI, ANIPIN, ANISNPA, AUTHONLY. ***Note:*** Authorization codes and PINs are validated, but PANIs are not.
		AUTHANI	Entering AUTHANI selects the following formats: • 7-digit AUTHCODE + 3-digit PIN — used when a partially- or fully-dialed authorization code and a filed 3-digit PIN are available. • 3-digit SNPA + 7-digit AUTHCODE — used when the PIN is not 3-digits in length.
		ANIPIN	Enter ANIPIN to select the following format: • 7-digit AUTHCODE + 3-dig PIN
		ANISNPA	Enter ANISNPA to select the following format: • 3-digit SNPA + 7-digit AUTHCODE
		AUTHONLY	Entering AUTHONLY selects the following formats: 7-digit AUTHCODE + 3-digit PIN — used when a partially- or fully-dialed authorization code and a filed 3-digit PIN are available. 3-digit SNPA + 7-digit AUTHCODE — used when the PIN is not 3-digits in length.

TRKGRP (ONAL trunk group type) (continued)

(Sheet 10 of 14)

Field	Subfield or refinement	Entry	Explanation and action
		ANINPA	Entering ANINPA selects the following format: A 3-digit NPA
	PANIINFO	Two-digit entry (00 to 99)	PSEUDO AUTOMATIC NUMBER IDENTIFICATION INFORMATION DIGITS. Enter the 2-digit value identifying the information digits. The default value for this field is 00 (normal call).
	TSUSR	0 to 254	TRUNK GROUP SUSPEND/RESUME TIMER. Enter the timing value used for suspend timing. Range of values for TSUSR is 0 to 254, in 100-ms (.1-second) increments. The default is 160 (16 seconds). The total value of the timer is 0 to 25.4 seconds. When this option is not datafilled or is datafilled to 0, no suspend timing is done and the SUSPEND is treated as a RELEASE.
	OPTIONS		OPTIONS. This field allows optional features; enter up to 35 options.
		NIL	Nil. Enter NIL to remove an option.
		MCCS	MECHANIZED CALLING CARD SERVICE. This option is not datafillable when the Basic Calling Card Services option is set to IDLE. When the option is ON, option MCCS is datafillable. The ON to IDLE transition requires that the datafill in this option be removed.
		OHQ	OFFHOOK QUEUING. Enter OHQ to allow incoming calls from this trunk group to use off-hook queuing capability on a terminating trunk group. Omit OHQ to disable.
		OHQTERM	TERMINATING OFFHOOK QUEUING. Enter OHQTERM to allow off-hook queuing for terminating calls on this trunk group. Omit OHQTERM to disable.

TRKGRP (ONAL trunk group type) (continued)

(Sheet 11 of 14)

Field	Subfield or refinement	Entry	Explanation and action
		IEXCLINX	INCOMING EXCLUSION INDEX. Enter the IEXCLINX option when the trunk group is incoming or 2-way. Refer to the OPTION=IEXCLINX section for refinement datafill.
		VPNSIX	VIRTUAL PRIVATE NETWORK 6-DIGIT DIALING. Enter VPNSIX to enable 6-digit dialing for VPN services. Omit VPNSIX to disable.
		ALTTRTMT	ALTERNATE TREATMENTS. Enter ALTTRTMT to enable calls originating on this trunk group to use the ALTERNAT subtable within the TMTCNTL table when routing to a treatment. Omit ALLTRTMT to disable.
		SCRNCL	SERVICE SCREENING CLASS. The UCS DMS-250 switch does not support this option for ONAL trunks.
		ALTSEIZ	ALTERNATE SEIZURE. The ALTSEIZ field activates different AB-bit seizure configurations for FXOs. Enter ALTSEIZ to set the circuit on a DTC using bit signaling equal to AB=10. Omit ALTSEIZ so the circuit is not a DTC and the bit signaling equals AB=00.
		CONDHOTL	CONDITIONAL HOTLINE. Enter CONDHOTL to enable this trunk group as a conditional hotline. Omit CONDHOTL if the trunk group is not a conditional hotline.
		DETDIAL	DIALTONE DETECTION. Enter DETDIAL to enable dialtone detection as a proceed to send a signal before outpulsing. This pertains to outgoing or 2-way FXO trunks only. Omit DETDIAL to disable.

TRKGRP (ONAL trunk group type) (continued)

(Sheet 12 of 14)

Field	Subfield or refinement	Entry	Explanation and action
		UATONE	UNIVERSAL ACCESS TONE. Enter UATONE to return the universal access (UA) disable tone, followed by dialtone. The operating company sends the UA tone to the subscriber indicating a tone-to-pulse converter disable before returning dial tone. Omit UATONE to disable.
		REORGVAL	REORIGINATION VALIDATION. Enter REORGVAL to specify the revalidation of a reoriginated calling card call.
		VARDIAL	VARIABLE LENGTH DIALING PLAN. Enter VARDIAL to enable variable length customer dialing. Omit VARDIAL to disable.
		OPNOAUTH	OPERATOR NO AUTHCODE. An authcode is not required for 0-, 0+, or 01+ calls when the OPNOAUTH feature is activated.
		VANIDB	VERIFY IN ANI DATABASE. ANI database failure treatment (ADBF) is given to PANI and FG-D cut-through calls which fail screening in table ANISCUSP.
		STRMBGDP	STROMBERG DIAL PLAN. Enter STRMBGDP to change the dialing plan to allow a 7-digit authorization code to be followed by an optional account code and the address digits. The dialing plan is: AUTHCODE + (optional PROMPT) + optional ACCT + (optional PROMPT) + ADDR ***Note 1:*** Enable the optional prompt prior to account code collection by datafilling the ACPROMPT option. ***Note 2:*** Enable the optional prompt prior to address collection by datafilling the PINADDRP refinement (table TRKGRP1) to Y.

TRKGRP (ONAL trunk group type) (continued)

(Sheet 13 of 14)

Field	Subfield or refinement	Entry	Explanation and action
		TMCICBLK	TERMINATING TRUNK CIC BLOCKING. Enter TMCICBLK to specify that CIC is to be blocked for calls on SS7-FGD, SS7-IMT, or MF-FGD trunks. Enter datafill for the TMCICBLK refinement.
	TMCICBLK	BLK_CIP, BLK_TNS, BLK_BOTH	Enter one of the following refinements for TMCICBLK: BLK_CIP. Enter BLK_CIP for SS7 trunks to block the delivery of the CIP parameter, or for PTS trunks to block delivery of the CIC for national calls. BLK_TNS. Enter BLK_TNS for SS7 trunks to block the delivery of the TNS parameter, or for PTS trunks to block delivery of the CIC for international calls. BLK_BOTH. Enter BLK_BOTH for PTS and SS7 trunks to block delivery of the CIC.
		DEFCIC	DEFAULT CARRIER IDENTIFICATION CODE ROUTING. If this option is set, translations and routing are based on the default CIC. Refer to section OPTION=DEFCIC for refinement datafill.
		CICSIZE	CARRIER IDENTIFICATION CODE SIZE. If CICSIZE is not specified for a trunk, a size of 3DIGS is used for the call. Enter datafill for the SIZE refinement.
	SIZE	3DIGS, 4DIGS	SIZE. Enter the value of 3DIGS or 4DIGS to specify either a 3-digit or 4-digit CIC.
		TCAIN	TERMINATING CAIN. Enter TCAIN to indicate that the trunk group is AIN capable when the trunk is the terminating agent. This option must be set in order for the trunk group to trigger on any AIN events related to the Terminating Call Model. This option must also be turned on for triggering on an Office basis.

TRKGRP (ONAL trunk group type) (continued)

(Sheet 14 of 14)

Field	Subfield or refinement	Entry	Explanation and action
		TCAINGRP	TERMINATING CAIN GROUP. Enter TCAINGRP to specify the terminating CAIN group for the trunk group. Enter datafill for the CAINGRP refinement.
	CAINGRP	valid CAINGRP	CAIN GROUP. Enter a valid CAINGRP from table CAINGRP.
	PANIVAL		PANI VALUE. Enter one of the following PANI formats: AUTHANI, ANIPIN, ANISNPA, AUTHONLY. ***Note:*** Authorization codes and PINs are validated, but PANIs are not.
		AUTHANI	Entering AUTHANI selects the following formats: 7-digit AUTHCODE + 3-digit PIN — used when a partially- or fully-dialed authorization code and a filed 3-digit PIN are available. 3-digit SNPA + 7-digit AUTHCODE — used when the PIN is not 3-digits in length.
		ANIPIN	Enter ANIPIN to select the following format: 7-digit AUTHCODE + 3-dig PIN
		ANISNPA	Enter ANISNPA to select the following format: 3-digit SNPA + 7-digit AUTHCODE
		AUTHONLY	Entering AUTHONLY selects the following formats: 7-digit AUTHCODE + 3-digit PIN — used when a partially- or fully-dialed authorization code and a filed 3-digit PIN are available. 3-digit SNPA + 7-digit AUTHCODE — used when the PIN is not 3-digits in length.
		ANINPA	Entering ANINPA selects the following format: A 3-digit NPA

TRKGRP (ONAL trunk group type) (continued)

OPTION=IEXCLINX

When OPTION=IEXCLINX, datafill the IEXCLINX refinement.

Refinement	Subfield or refinement	Entry	Explanation and action
IEXCLINX		0 to 255	INCOMING EXCLUSION INDEX. Enter a number between 0 and 255 to index into table IEXCLUDE. Table IEXCLUDE indicates NPAs and NXXs to block or allow.
		OPCHOICE	OPCHOICE. When this option is set, datafill the the OPCHIDX refinement. Refer to the OPTION=OPCHOICE for refinement datafill.
		CDRTMPLT	CDR TEMPLATE. Use this option to define a template for formatting CDRs. Refer to the OPTION=CDRTMPLT section for refinement datafill.

OPTION=DEFCIC

When OPTION=DEFCIC, datafill the CIC, OUTPULSE, OPERRTE, ANIRTE, CAINCIC, and DFCICRTE refinements.

Refinement	Subfield or refinement	Entry	Explanation and action
CIC		0000 to 9999	CARRIER IDENTIFICATION CODE. Enter the default CIC digits to be outpulsed.
OUTPULSE		Y or N	OUTPULSE. Enter Y or N to use the default CIC for outpulsing.
OPERRTE		Y or N	OPERRTE. Enter Y or N to use the default CIC as an index into table OPERRTE.
ANIRTE		Y or N	AUTOMATIC NUMBER IDENTIFICATION ROUTING. Enter Y or N to use the default CIC during ANI screening. ***Note:*** SOC UTRS0200 must be on before this option is used for a call.

TRKGRP (ONAL trunk group type) (continued)

OPTION=OPCHOICE

When OPTION=OPCHOICE, datafill the OPCHIDX refinement.

Refinement	Subfield or refinement	Entry	Explanation and action
OPCHIDX		0 to 1023	OPERATOR CHOICE INDEX. This index points to a tuple in table OPCHOICE.

OPTION=CDRTMPLT

When OPTION=CDRTMPLT, datafill the TMPLTIDX and USEEDIT refinements.

Refinement	Subfield or refinement	Entry	Explanation and action
TMPLTIDX		Valid name datafilled in table CDRTMPLT	TEMPLATE INDEX. When SOC option UBFR0001 is enabled, use table CDRTMPLT to define new CDR template. For more information on CDR templates, see *UCS DMS-250 Billing Records Application Guide.*
USEEDIT		N or Y	USE EDIT. Enter N to use the active version of the CDR template. Y indicates that the edit version is used. ***Note:*** This field is used for testing purposes only. It should be set to N, which is the default.

Datafill example

The following example shows datafill for table TRKGRP (ONAL trunk group type).

TRKGRP (ONAL trunk group type) (continued)

```
GRPKEY GRPTYP TRAFSNO PADGRP NCCLS GRPINFO
_____________________________________________

ONLNX3ICDTGO ONAL 127 NPDGP NCOF 0 IC ONL MIDL 16 7 16 214 1 N ON 0
S 5 111 MANUAL 214 0 6112211 NONE 0 Y 1 NONE 00 160 (MCCS )
(REORGVAL ) $

ONLNX5ICDTSZ ONAL 127 NPDGP NCOF 0 IC ONL MIDL 16 7 16 214 1 N ON 4
S 5 111 MANUAL 214 0 611 NONE 0 Y 1 NONE 00 160 (MCCS ) (OHQ )
(REORGVAL ) $
```

Table history

UCS13

Removed UCS07 and UCS07FLEX values from table OPTION=CDRTMPLT (A60007776).

UCS12

The module was updated for editorial comments.

UCS11

The OPCHIDX field is updated. The maximum number of entries is expanded to 1023. (A60006449).

UCS09

Added options ANINPA to PANIVAL field and added PANIVAL field to the options vector (AX1247).

UCS08

The CICSIZE, DEFCIC, TCAIN, TCAINGRP, and TMCICBLK options were added.

Supplementary information

If operating company personnel set the TCAINGRP option without setting the TCAIN option, the switch generates the following warning message:

```
WARNING: NO TRIGGERING WILL BE DONE FOR CALLS TERMINATING
ON THIS TRUNK GROUP IF TCAIN OPTION IS NOT DATAFILLED.
```

TRKGRP (ONAL trunk group type) (end)

If operating company personnel set the CAINGRP option without setting the CAIN option, the switch generates the following warning message:

```
WARNING: NO TRIGGERING WILL BE DONE FOR CALLS ORIGINATING
ON THIS TRUNK GROUP IF CAIN OPTION IS NOT DATAFILLED.
```

TRKGRP type SOCKT

Short or Open Circuit Test Line (OCKT) or SCKT

Trunk group type SOCKT is used in switches that are configured for short- and open-circuit testing.

Each transmission termination trunk consists of a trunk circuit with product engineering code (PEC) NT2X71AA (transmission termination trunk), and is represented in table CLLI by two pseudo-common language location identifiers (CLLI): SCKT and OCKT. An entry in table TRKGRP (for group type SOCKT) is required for each of the two pseudo-CLLIs.

Subgroup data is only required for pseudo-CLLI SCKT, and is produced automatically by table control.

In table CLLI, all trunk members are assigned to the pseudo-CLLI SCKT.

The trunk card with PEC NT2X71AA has only one circuit (even circuit number). The odd-numbered circuit must be specified (even circuit number incremented by 1) in table TRKMEM.

For each member of the trunk group, set field DBREC and DBTRANS in subtable CLLIMTCE.DIAGDATA equal to 36 and 20 respectively.

For related information, refer to table TRKGRP type MAINT.

Datafill

The following table lists the datafill for table TRKGRP type SOCKT.

Field descriptions (Sheet 1 of 3)

Field	Subfield or refinement	Entry	Explanation and action
GRPKEY		see subfield	*Group key* This field consists of subfield CLLI.
	CLLI	OCKT or SCKT	*Common language location identifier* Enter the pseudo-CLLI for the transmission termination trunk group.

TRKGRP type SOCKT (continued)

Field descriptions (Sheet 2 of 3)

Field	Subfield or refinement	Entry	Explanation and action
GRPINFO		see subfields	*Variable group data* This field consists of subfields GRPTYP, TRAFSNO, PADGRP, NCCLS, and CARDCODE. Refer to section “General field information" in table TRKGRP for information concerning an alternate structure for this field that results from the datafill of table CUSTFLDS.
	GRPTYP	SOCKT	*Group type* Enter SOCKT to specify the group type for transmission terminating trunks.
	TRAFSNO	numeric (0 to 127)	*Traffic separation number* Enter the incoming and outgoing traffic separation number assigned to the trunk group. If a traffic separation number is not required, enter 0 (zero). For switches with software package NTX085AA (Traffic Separation Peg Count), enter a value from 1 to the value of office parameter TFAN_OUT_MAX_NUMBER in table OFCENG. For switches without software package NTX085AA, enter a value from 1 to 15. Incoming and outgoing traffic separation numbers 1 to 9 should be reserved for generic traffic separation numbers. For more information, refer to table TFANINT.
	PADGRP	alphanumeric (1 to 5 characters)	*Pad group* Enter the name of the pad group assigned to the trunk group in table PADDATA. For more information, refer to table PADDATA.

TRKGRP type SOCKT (end)

Field descriptions (Sheet 3 of 3)

Field	Subfield or refinement	Entry	Explanation and action
	NCCLS	NCBN NCID NCIM NCIT NCLT NCOF NCON NCOT NCRT NCTC or NOSC	*Operational measurements no-circuit class* Enter the operational measurements (OM) no-circuit class (NCCLS) to indicate which OM register is incremented if treatment GNCT (generalized no circuit) occurs. The initial value for this trunk group type is NCRT (no circuit). For more information, refer to table TRKGRP and the *Operational Measurements Reference Manual*.
	CARDCODE	2X71AA	*Card code* Enter 2X71AA to specify the product engineering code (PEC) that applies for members of the transmission termination trunk group. If office parameter TRK_OOS_CHK_ON in table OFCVAR is set to Y, busy all trunks in the group before changing the value of this field by data modification order (DMO).

Datafill example

The following example shows sample datafill for table TRKGRP type SOCKT.

MAP display example for table TRKGRP type SOCKT

```
GRPKEY      GRPINFO
_____________________________________________________
SCKT        SOCKT 0 TLD NCRT 2X71AA
OCKT        SOCKT 0 TLD NCRT 2X71AA
```

TRKGRP (ONAT trunk group type)

Table name

TRKGRP (ONAT trunk group type) table

Functional description

Trunk group type ONAT (FGB/FGC) defines ways of connecting the UCS DMS-250 switch to the trunk side of a class 5 end office (EO). ONATs also allow connection between a Class 4 or 5 local exchange carrier (LEC) to the UCS DMS-250 switch. Other common carrier (OCC) subscribers access FGB services by dialing a universal access code (UAC) in the 950-WXXX format that identifies the OCC (W = 0 or 1; X = 0-9).

Field descriptions

The following table describes field names, subfield names, and valid data ranges for table TRKGRP (ONAT trunk group type).

(Sheet 1 of 15)

Field	Subfield or refinement	Entry	Explanation and action
GRPKEY		Valid CLLI datafilled in table CLLI	GROUP KEY. Enter the CLLI names used to identify the ONAT trunk group type.
GRPTYP		ONAT	GROUP TYPE. Enter the trunk group type ONAT.

TRKGRP (ONAT trunk group type) (continued)

(Sheet 2 of 15)

Field	Subfield or refinement	Entry	Explanation and action
TRAFSNO		0 to 127	TRAFFIC SEPARATION NUMBER. Select entry as follows: If the switch has the optional traffic separation software, enter the outgoing traffic separation number, 1-127, assigned to intersection. If traffic separation is not required, enter zero. If the switch has software package that includes the Traffic Separation Peg Count feature package, the range of values for the outgoing traffic separation numbers are dependent upon parameter TFAN_OUT_MAX_NUMBER in the OFCENG table. For a switch without the Traffic Separation Peg Count feature package, the range of values for the traffic separation numbers is 0-15. It is recommended that outgoing traffic separation numbers 1 through 9 be reserved for generic traffic separation numbers. Further information concerning traffic separation numbers can be found in table TFANINT.
PADGRP		NPDGP or valid pad group from table PADDATA	PAD GROUP. Enter the pad group name if pad groups are defined in table PADDATA. Enter NPDGP (fixed loss plan) if no pad group is required.

TRKGRP (ONAT trunk group type) (continued)

(Sheet 3 of 15)

Field	Subfield or refinement	Entry	Explanation and action
NCCLS		NCRT, NCTC, NCLT, NOSC, NCBN, NCID, NCOT, NCIT, NCIM, NCON, NCOF	NO CIRCUIT CLASS TYPE. Upon exhausting the route list, No Circuit On-net Trunk (NCON) defines the No Circuit Class OM (in group OFZ2) to peg when group is the last element in the route list. Enter one of the following types: • NCRT=no circuit • NCTC=no circuit toll completing trunk • NCLT=no circuit local tandem trunk • NOSC=no circuit service circuit trunk • NCBN=no circuit business network trunk • NCID=no circuit inward dial • NCOT=no circuit other trunk • NCIT=no circuit intertoll trunk • NCIM=no circuit intermachine trunk • NCON=no circuit on-network trunk • NCOF=no circuit off-network trunk
GRPINFO		see refinements	GROUP INFORMATION. Datafill the ONAT trunk group type refinements.
	COS	0 to 119	CLASS OF SERVICE. Enter the class of service code that will be used in screening the calls.
	DIR	IC, OG, or 2W	DIRECTION. Enter IC (incoming), OG (outgoing), or 2W (2-way) to define the direction of traffic flow.
	PRTNM	NPRT or valid pretranslator datafilled in table STDPRTCT	STANDARD PRETRANSLATOR TABLE NAME. Enter a 4-character pretranslator name, if standard pretranslation is required. Enter NPRT for no pretranslation. ***Note:*** This name is datafilled in table STDPRTCT.

TRKGRP (ONAT trunk group type) (continued)

(Sheet 4 of 15)

Field	Subfield or refinement	Entry	Explanation and action
	SELSEQ	LIDL, MIDL, ASEQ, DSEQ, CWCTH, CCWCTH, WIDEBAND	SELECT SEQUENCE. Enter one of the following: LIDL, MIDL, ASEQ, DSEQ, CWCTH, CCWCTH, or WIDEBAND. Enter Least Idle (LIDL) for a 2-way trunk group with a far-end link list switch with most idle select sequence. Enter most idle (MIDL) for a 2-way trunk group with a far-end link switch with least idle select sequence, or far end is not a link list switch, or trunk group direction is incoming or outgoing. Enter ascending sequence (ASEQ) to use a trunk group member immediately following the last trunk member chosen. Enter descending sequence (DSEQ) to select a trunk group member immediately preceding a trunk group member in use is the next trunk member chosen. Enter clockwise circular trunk hunting (CWCTH) to start a clockwise, circular search of the route list starting at the most recently released (MRR) trunk. The MRR reference point changes constantly. The search selects the first idle trunk. Enter counterclockwise circular trunk hunting (CCWCTH) to start a counterclockwise, circular search of the route list starting at the MRR trunk. The search selects the first idle trunk. Enter wideband (WIDEBAND) to enable the trunk group to handle wideband calls.
	ODSCFLTR	5 to 255	ORIGINATING DISCONNECT FILTER. Enter the minimum amount of time in 10-millisecond increments that the UCS DMS-250 switch observes a sustained on-hook (disconnect) signal from the originating central office before declaring disconnect.

TRKGRP (ONAT trunk group type) (continued)

(Sheet 5 of 15)

Field	Subfield or refinement	Entry	Explanation and action
	ORIGFLTR	5 to 255	ORIGINATION FILTER. Enter the minimum amount of time in 10-millisecond increments that the UCS DMS-250 switch observes origination (ground on tip conductor) from a central office before declaring origination.
	TDSCFLTR	5 to 255	TERMINATING DISCONNECT FILTER. Enter the minimum amount of time in 10-millisecond increments that the UCS DMS-250 switch observes on-hook before declaring disconnect.
	ANSWFLTR	5 to 255	ANSWER FILTER. Specify the minimum amount of time, in 10-millisecond increments, that the UCS DMS-250 switch is to observe answer before answer is declared. ***Note:*** Hardware answer is detected by monitoring the A or A&B bit values received from terminator for tie trunk, loop start FXS, and ground start FXS interfaces. A hardware answer signal for the time specified in this field is declared an answer.
	SNDRPSIG	2 to 30	SENDERIZED PERMANENT SIGNAL. Enter the permanent signal timing in seconds for senderized UAC and ANI digits on ENFIA B and C trunks.
	SNDRPDIL	2 to 30	SENDERIZED PARTIAL DIAL. Enter the partial dial time in seconds for senderized UAC and ANI digits on EAFIN B and C trunks.

TRKGRP (ONAT trunk group type) (continued)

(Sheet 6 of 15)

Field	Subfield or refinement	Entry	Explanation and action
	TRAFCLS	NIL, LINE, INTERCEPT, REPAIR, XX, IR, CA, DD, IA, IE, IT, LW, MN, MT, OA, RC, SP, TC, TE, TG, TM, TO, TS, TT, TW, AL, AN, CB, CD, CP, CS, DA, DS, IN, MA, MB, NT, OF, OW, PS, RR, RS, SC, SO, TA, TI, TK, TP, VC, VR, WE, MI, ON, BL, IM, OT, DL, DB, ID	TRAFFIC CLASS. Enter the traffic usage class where the trunk group is assigned. This field is not used by UCS DMS-250 switch software, but is provided for the convenience of operating companies who wish to associate their own traffic class code with each trunk group.
	AUTHDIAL	0 to 15	AUTHORIZATION CODE DIALED. Enter the number of digits that must be dialed to constitute a valid authorization code. A zero (0) means that the authorization code is completely filed in the trunk group. Authorization codes can be completely dialed, completely filed, partially dialed, and partially filed.
	ASCRNIDX	0 to 20	AUTOMATIC NUMBER IDENTIFICATION SCREENING INDEX. If performing ANI screening on this FGB trunk group, enter a number indexing into the ANISCRNU table which lists the 7-digit ANIs to block. Enter a 0 (zero) if ANI screening is not required on this trunk group or if trunk group direction is outgoing (OG).
	CONNGNPA	3 digits or NIL	CONNECTING NPA. Enter the 3-digit primary NPA code of the terminating switch when the trunk group is OG or 2W. Enter NIL for an incoming trunk group.

TRKGRP (ONAT trunk group type) (continued)

(Sheet 7 of 15)

Field	Subfield or refinement	Entry	Explanation and action
	DIALTONE	C, N, S,	DIALTONE. Enter S if standard dialtone is applied (350 + 440 Hz). Enter C if dialtone applied toward the subscriber is carrier dialtone (400 Hz). Enter N if no dialtone is required.
	FASTIDGT	2 to 30	FAST INTERDIGITAL TIME. Enter the fast interdigital time. Fast interdigital timing is used for international dialing. A minimum and maximum number of digits to collect is specified in Standard Pretranslator table for international direct distance dial calls. The UCS DMS-250 switch uses the partial dial timing parameter specified in table Trunk Subgroup (TRKSGRP) for the minimum required digits, and uses the fast interdigital timing value for the remaining digits. This field is only used as a digit collection timer if the STDPRTCT selector IN is used. Table TRKSGRP digit collection timer PARTDIAL is used if the operating company personnel use selector IP in table STDPRTCT.
	FEATGRP	FGB, FGC, FGBC	FEATURE GROUP. Enter the feature group interface to use for this trunk group: FGB=feature group B; FGC=feature group C; FGBC=feature groups B and C. The incoming FGB trunks allow provisioning of CAIN and CAINGRP options.
	OPART	0 to 999	ORIGINATING PARTITION. Enter the originating partition number to be associated with the trunk group which translates to a serving translation scheme (STS) for region code screening.

TRKGRP (ONAT trunk group type) (continued)

(Sheet 8 of 15)

Field	Subfield or refinement	Entry	Explanation and action
	RECALLDT	AUTO, MANUAL, NONE	RECALL DIALTONE. Enter one of the following: AUTO. For the subscriber to automatically receive dialtone after the initial called party disconnect or upon completion of a treatment. MANUAL. Dialing an octothorpe (#) or an asterisk (*) can reoriginate dialtone. NONE. Indicates neither MANUAL nor AUTO recall dialtone is used. NONE is the default.
	SNPA	3 digits or NIL	SERVING NUMBERING PLAN AREA. Enter NIL for outgoing trunk groups. Enter the SNPA number for the number to prefix on locally dialed 7-digit numbers when outpulsing requires the NPA. This situation occurs when the operating company uses code type LRTE in table HNPACODE.
	TIMEBIAS	-12 to 12	TIMEBIAS. Enter the time zone difference between the originating trunk group and the UCS DMS-250 switch. This shows the originating time of the subscriber to use for date and time restricting (for example, if a call originates in California and enters the UCS DMS-250 switch in Texas, the TIMEBIAS is -2 hours). Enter zero if there is no time zone difference.
	VAUTHFLD	Vector of up to 15 digits or NOAUTHS	AUTHORIZATION CODE. Enter the authorization code digits to file with the trunk group. Enter NOAUTHS when the authorization code digits are not filed within the trunk group.
	ZEROMPOS	NONE, or valid position datafilled in table POSITION	ZERO MINUS POSITION. Enter the type of position from table POSITION for routing zero minus calls on this trunk group. Enter NONE for not routing zero minus calls on this trunk group.

TRKGRP (ONAT trunk group type) (continued)

(Sheet 9 of 15)

Field	Subfield or refinement	Entry	Explanation and action
	ZONE	0 to 9, A, B, C, AUTO	ZONE. Enter a zone type number. Use this field to calculate if loop-around IMTs with echo canceller are needed. Add the ZONE number assigned to the originating trunk group to the ZONE number assigned to the first choice in the terminating route list.
	AUTHFRST	Y or N	AUTHCODE FIRST. Enter Y if the authorization code comes before the dialed number (DN). Enter N if the authorization codes come after the DN.
	ADIN	0 to 99	AUTHCODE DATABASE INDEX NUMBER. Enter the index into table AUTHCODE. The default value is 0.
	PANIVAL		PANI VALUE. Enter one of the following PANI formats: AUTHANI, ANIPIN, ANISNPA, AUTHONLY. ***Note:*** Authorization codes and PINs are validated, but PANIs are not.
		AUTHANI	Entering AUTHANI selects the following formats: 7-digit AUTHCODE + 3-digit PIN — used when a partially- or fully-dialed authorization code and a filed 3-digit PIN are available. 3-digit SNPA + 7-digit AUTHCODE — used when the PIN is not 3-digits in length.
		ANIPIN	Enter ANIPIN to select the following format: 7-digit AUTHCODE + 3-dig PIN
		ANISNPA	Enter ANISNPA to select the following format: 3-digit SNPA + 7-digit AUTHCODE

TRKGRP (ONAT trunk group type) (continued)

(Sheet 10 of 15)

Field	Subfield or refinement	Entry	Explanation and action
		AUTHONLY	Entering AUTHONLY selects the following formats: 7-digit AUTHCODE + 3-digit PIN — used when a partially- or fully-dialed authorization code and a filed 3-digit PIN are available. 3-digit SNPA + 7-digit AUTHCODE — used when the PIN is not 3-digits in length.
		ANINPA	Entering ANINPA selects the following format: A 3-digit NPA
	PANIINFO	2-digit entry (00 to 99)	PSEUDO AUTOMATIC NUMBER IDENTIFICATION INFORMATION. Enter 00 for a normal call. This 2-digit field identifies the type of call being placed.
	ANSWSUPR	see entries	ANSWER SUPERVISION.
		IMMEDIATE	If set to IMMEDIATE, the call sequence is as follows: an off-hook signal is returned to the Local Exchange Carrier (LEC) immediately after digit collection, regardless of whether the call was actually answered on the terminating end.
		TRUE_ANSWER _N00_CGPB	If set to TRUE_ANSWER_N00_CGPB, there is true answer supervision only for N00 Calling Party Billed calls.
		TRUE_ANSWER _ALWAYS	If set to TRUE_ANSWER_ALWAYS, true answer supervision exists for all non-Universal Access (UA) FGC calls.
	BCNAME	Valid BC datafilled in table BCDEF	BEARER CAPABILITY NAME. Enter any value previously defined in table BCDEF. This field contains the bearer capability name associated with the trunk.

TRKGRP (ONAT trunk group type) (continued)

(Sheet 11 of 15)

Field	Subfield or refinement	Entry	Explanation and action
	TSUSR	0 to 254	TRUNK GROUP SUSPEND/RESUME TIMER. Enter the timing value used for suspend timing. Range of values for TSUSR is 0 to 254, in 100-ms (.1-second) increments. The default is 160 (16 seconds). The total value of the timer is 0 to 25.4 seconds. When this option is not datafilled or is datafilled to 0, no suspend timing is done and the SUSPEND is treated as a RELEASE.
	OPTIONS		OPTIONS. This field allows optional features; enter up to 35 options.
		NIL	Nil. Enter NIL to remove an option.
		MCCS	MECHANIZED CALLING CARD SERVICE. This option is not datafillable when the Basic Calling Card Services option is set to IDLE. When the option is ON, option MCCS is datafillable. The ON to IDLE transition requires that the datafill in this option be removed.
		OHQ	OFFHOOK QUEUING. Enter OHQ to allow incoming calls from this trunk group to use off-hook queuing capability on a terminating trunk group. Omit OHQ to disable.
		OHQTERM	TERMINATING OFFHOOK QUEUING. Enter OHQTERM to allow off-hook queuing for terminating calls on this trunk group. Omit OHQTERM to disable.
		IEXCLINX	INCOMING EXCLUSION INDEX. Enter the IEXCLINX option when the trunk group is incoming or 2-way. Refer to the OPTION=IEXCLINX section for refinement datafill.
		VPNSIX	VIRTUAL PRIVATE NETWORK 6-DIGIT DIALING. Enter VPNSIX to enable 6-digit dialing for VPN services. Omit VPNSIX to disable.

TRKGRP (ONAT trunk group type) (continued)

(Sheet 12 of 15)

Field	Subfield or refinement	Entry	Explanation and action
		ALTTRTMT	ALTERNATE TREATMENTS. Enter ALTTRTMT to enable calls originating on this trunk group to use the ALTERNAT subtable within the TMTCNTL table when routing to a treatment. Omit ALLTRTMT to disable.
		SCRNCL	SERVICE SCREENING CLASS. The UCS DMS-250 switch does not support this option for ONAL trunks.
		ANIDIGS	AUTOMATIC NUMBER IDENTIFICATION DIGITS. Enter ANI when ANI digits are required.
		UATONE	UNIVERSAL ACCESS TONE. Enter UATONE to enable a tone to pulse converter disable tone to be sent to the subscriber prior to returning dial tone. When this field is datafilled, disable tone is returned followed by dialtone. Omit UATONE to disable.
		REORGVAL	REORIGINATION VALIDATION. Enter REORGVAL to enable revalidation of a reoriginated calling card call. Omit REORGVAL to disable.
		VARDIAL	VARIABLE LENGTH DIALING PLAN. Enter VARDIAL to enable variable length customer dialing. Omit VARDIAL to disable.
		OPNOAUTH	OPERATOR NO AUTHCODE. An authcode is not required for 0-, 0+, or 01+ calls when the OPNOAUTH feature is activated.
		VANIDB	VERIFY IN ANI DATABASE. ANI database failure treatment (ADBF) is given to PANI and FGD cut-through calls which fail screening in table ANISCUSP.
		AUTHPIN	AUTH PIN.

TRKGRP (ONAT trunk group type) (continued)

(Sheet 13 of 15)

Field	Subfield or refinement	Entry	Explanation and action
		UACPRTNM	UNIVERSAL ACCESS PRETRANSLATOR NAME. Enter UACPRTNM to send call processing to table STDPRTCT for the value entered in the office parameter table OFCVAR field UACPRETNAME. Omit UACPRTNM to disable.
		STRMBGDP	STROMBERG DIAL PLAN. Enter STRMBGDP to change the dialing plan to allow a 7-digit authorization code to be followed by an optional account code and the address digits. The dialing plan is: AUTHCODE + (optional PROMPT) + optional ACCT + (optional PROMPT) + ADDR ***Note 1:*** Enable the optional prompt prior to account code collection by datafilling the ACPROMPT option. ***Note 2:*** Enable the optional prompt prior to address collection by datafilling the PINADDRP refinement (table TRKGRP1) to Y.
		VPROMPTS	VOICE PROMPT CALL. Set this option to trigger voice prompting for MCCS calls.
		OPCHOICE	OPCHOICE. When this option is set, datafill the the OPCHIDX refinement. Refer to the OPTION=OPCHOICE for refinement datafill.
		CDRTMPLT	CDR TEMPLATE. Use this option to define a template for formatting CDRs. Refer to the OPTION=CDRTMPLT section for refinement datafill.
		TMCICBLK	TERMINATING TRUNK CIC BLOCKING. Enter TMCICBLK to specify that CIC is to be blocked for calls on SS7-FGD, SS7-IMT, or MF-FGD trunks. Enter datafill for the TMCICBLK refinement.

TRKGRP (ONAT trunk group type) (continued)

(Sheet 14 of 15)

Field	Subfield or refinement	Entry	Explanation and action
	TMCICBLK	BLK_CIP, BLK_TNS, BLK_BOTH	Enter one of the following refinements for TMCICBLK: BLK_CIP. Enter BLK_CIP for SS7 trunks to block the delivery of the CIP parameter, or for PTS trunks to block delivery of the CIC for national calls. BLK_TNS. Enter BLK_TNS for SS7 trunks to block the delivery of the TNS parameter, or for PTS trunks to block delivery of the CIC for international calls. BLK_BOTH. Enter BLK_BOTH for PTS and SS7 trunks to block delivery of the CIC.
		DEFCIC	DEFAULT CARRIER IDENTIFICATION CODE ROUTING. If this option is set, translations and routing are based on the default CIC. Refer to section OPTION=DEFCIC for refinement datafill.
		CICSIZE	CARRIER IDENTIFICATION CODE SIZE. If CICSIZE is not specified for a trunk, a size of 3DIGS is used for the call. Enter datafill for the SIZE refinement.
	SIZE	3DIGS, 4DIGS	SIZE. Enter the value of 3DIGS or 4DIGS to specify either a 3-digit or 4-digit CIC.
		TCAIN	TERMINATING CAIN. Enter TCAIN to indicate that the trunk group is AIN capable when the trunk is the terminating agent. This option must be set in order for the trunk group to trigger on any AIN events related to the Terminating Call Model. This option must also be turned on for triggering on an Office basis.
		TCAINGRP	TERMINATING CAIN GROUP. Enter TCAINGRP to specify the terminating CAIN group for the trunk group. Enter datafill for the CAINGRP refinement.
	CAINGRP	valid CAINGRP	CAIN GROUP. Enter a valid CAINGRP from table CAINGRP.

TRKGRP (ONAT trunk group type) (continued)

(Sheet 15 of 15)

Field	Subfield or refinement	Entry	Explanation and action
	PANIVAL		PANI VALUE. Enter one of the following PANI formats: AUTHANI, ANIPIN, ANISNPA, AUTHONLY. ***Note:*** Authorization codes and PINs are validated, but PANIs are not.
		AUTHANI	Entering AUTHANI selects the following formats: 7-digit AUTHCODE + 3-digit PIN — used when a partially- or fully-dialed authorization code and a filed 3-digit PIN are available. 3-digit SNPA + 7-digit AUTHCODE — used when the PIN is not 3-digits in length.
		ANIPIN	Enter ANIPIN to select the following format: 7-digit AUTHCODE + 3-dig PIN
		ANISNPA	Enter ANISNPA to select the following format: 3-digit SNPA + 7-digit AUTHCODE
		AUTHONLY	Entering AUTHONLY selects the following formats: 7-digit AUTHCODE + 3-digit PIN — used when a partially- or fully-dialed authorization code and a filed 3-digit PIN are available. 3-digit SNPA + 7-digit AUTHCODE — used when the PIN is not 3-digits in length.
		ANINPA	Entering ANINPA selects the following format: A 3-digit NPA

TRKGRP (ONAT trunk group type) (continued)

OPTION=IEXCLINX

When OPTION=IEXCLINX, datafill the IEXCLINX refinement.

Refinement	Subfield or refinement	Entry	Explanation and action
IEXCLINX		0 to 255	INCOMING EXCLUSION INDEX. Enter a number between 0 and 255 to index into table IEXCLUDE. Table IEXCLUDE indicates NPAs and NXXs to block or allow.

OPTION=OPCHOICE

When OPTION=OPCHOICE, datafill the OPCHIDX refinement.

Refinement	Subfield or refinement	Entry	Explanation and action
OPCHIDX		0 to 1023	OPERATOR CHOICE INDEX. This index points to a tuple in table OPCHOICE.

OPTION=CDRTMPLT

When OPTION=CDRTMPLT, datafill the TMPLTIDX and USEEDIT refinements.

Refinement	Subfield or refinement	Entry	Explanation and action
TMPLTIDX		Valid name datafilled in table CDRTMPLT	TEMPLATE INDEX. When SOC option UBFR0001 is enabled, you can use table CDRTMPLT to create new CDR template. For more information on CDR templates, see *UCS DMS-250 Billing Records Application Guide.*
USEEDIT		N or Y	USE EDIT. Enter N to use the active version of the CDR template. Y indicates that the edit version is used. ***Note:*** This field is used for testing purposes only. It should be set to N, which is the default.

OPTION=DEFCIC

When OPTION=DEFCIC, datafill the CIC, OUTPULSE, OPERRTE, ANIRTE, CAINCIC, and DFCICRTE refinements.

Refinement	Subfield or refinement	Entry	Explanation and action
CIC		0000 to 9999	CARRIER IDENTIFICATION CODE. Enter the default CIC digits to be outpulsed.
OUTPULSE		Y or N	OUTPULSE. Enter Y or N to use the default CIC for outpulsing.
OPERRTE		Y or N	OPERRTE. Enter Y or N to use the default CIC as an index into table OPERRTE.
ANIRTE		Y or N	AUTOMATIC NUMBER IDENTIFICATION ROUTING. Enter Y or N to use the default CIC during ANI screening. ***Note:*** SOC UTRS0200 must be on before this option is used for a call.

Datafill example

The following example shows datafill for table TRKGRP (ONAT trunk group type).

```
GRPKEY GRPTYP TRAFSNO PADGRP NCCLS GRPINFO
_____________________________________________

ONTNX0ICDTDD ONAT 50 NPDGP NCOF 0 IC ONT MIDL 16 7 16 16 7 7 OT 0 0
214 S 7 FGBC 111 MANUAL 214 0 6112211 NONE 0 Y 1 NONE 00 IMMEDIATE
VOICE_DATA 160 (MCCS ) (OHQ ) (IEXCLINX 1) $

ONTNX1ICDTWK ONAT 50 NPDGP NCOF 0 IC ONT MIDL 16 7 16 16 7 7 OT 7 0
214 S 7 FGBC 111 NONE 214 0 NOAUTHS NONE 0 N 1 NONE 00 IMMEDIATE
VOICE_DATA 160 (MCCS ) (OHQ ) $
```

TRKGRP (ONAT trunk group type) (end)

Table history

UCS13

Removed UCS07 and UCS07FLEX values from table OPTION=CDRTMPLT (A60007776).

UCS12

The module was updated for editorial comments.

UCS11

Modified FEATGRP field to include CAIN and CAINGRP options on FGB trunks (PSD07012). The OPCHIDX field is updated. The maximum number of entries is expanded to 1023. (A60006449).

UCS09

Added options ANINPA to PANIVAL field and added PANIVAL field to the options vector (AX1247).

UCS08

The CICSIZE, DEFCIC, TCAIN, TCAINGRP and TMCICBLK options were added.

Supplementary information

If operating company personnel set the TCAINGRP option without setting the TCAIN option, the switch generates the following warning message:

```
WARNING: NO TRIGGERING WILL BE DONE FOR CALLS TERMINATING
ON THIS TRUNK GROUP IF TCAIN OPTION IS NOT DATAFILLED.
```

If operating company personnel set the CAINGRP option without setting the CAIN option, the switch generates the following warning message:

```
WARNING: NO TRIGGERING WILL BE DONE FOR CALLS ORIGINATING
ON THIS TRUNK GROUP IF CAIN OPTION IS NOT DATAFILLED.
```

TRKGRP (PRA250 trunk group type)

Table name

TRKGRP (PRA250 trunk group type) table

Functional description

Trunk group type PRA250 defines information about supporting integrated services digital network (ISDN) PRI calls. This trunk type is also known as Primary Rate Interface (PRI) or Primary Rate Access (PRA) trunk group.

Field descriptions

The following table describes field names, subfield names, and valid data ranges for table TRKGRP (PRA250 trunk group type).

Field	Subfield or refinement	Entry	Explanation and action
GRPKEY		Valid CLLI datafilled in table CLLI	GROUP KEY. Enter the CLLI names used to identify the PRA250 trunk group type.
GRPTYP		PRA250	GROUP TYPE. Enter the trunk group type PRA250.

TRKGRP (PRA250 trunk group type) (continued)

Field	Subfield or refinement	Entry	Explanation and action
TRAFSNO		0 to 127	TRAFFIC SEPARATION NUMBER. Select entry as follows: • If the switch has the optional traffic separation software, enter the outgoing traffic separation number, 1-127, assigned to intersection. • If traffic separation is not required, enter zero. • If the switch has software package that includes the Traffic Separation Peg Count feature package, the range of values for the outgoing traffic separation numbers are dependent upon parameter TFAN_OUT_MAX_NUMBER in the OFCENG table. • For a switch without the Traffic Separation Peg Count feature package, the range of values for the traffic separation numbers is 0-15. • It is recommended that outgoing traffic separation numbers 1 through 9 be reserved for generic traffic separation numbers. Further information concerning traffic separation numbers can be found in table TFANINT.
PADGRP		NPDGP or valid pad group from table PADDATA	PAD GROUP. Enter the pad group name if pad groups are defined in table PADDATA. Enter NPDGP (fixed loss plan) if no pad group is required.

TRKGRP (PRA250 trunk group type) (continued)

Field	Subfield or refinement	Entry	Explanation and action
NCCLS		NCRT, NCTC, NCLT, NOSC, NCBN, NCID, NCOT, NCIT, NCIM, NCON, NCOF	NO CIRCUIT CLASS TYPE. Upon exhausting the route list, No Circuit On-net Trunk (NCON) defines the No Circuit Class OM (in group OFZ2) to peg when group is the last element in the route list. Enter one of the following types: • NCRT=no circuit • NCTC=no circuit toll completing trunk • NCLT=no circuit local tandem trunk • NOSC=no circuit service circuit trunk • NCBN=no circuit business network trunk • NCID=no circuit inward dial • NCOT=no circuit other trunk • NCIT=no circuit intertoll trunk • NCIM=no circuit intermachine trunk • NCON=no circuit on-network trunk • NCOF=no circuit off-network trunk
CUSTOMER		UCS or UCSUST	CUSTOMER. Enter name of customer.

TRKGRP (PRA250 trunk group type) (continued)

CUSTOMER=UCS

When CUSTOMER=UCS, datafill the following refinements:

TRKGRP (PRA250 trunk group type) (continued)

Refinement	Subfield or refinement	Entry	Explanation and action
SELSEQ		LIDL, MIDL, ASEQ, DSEQ, CWCTH, CCWCTH, WIDEBAND	SELECT SEQUENCE. Enter one of the following: LIDL, MIDL, ASEQ, DSEQ, CWCTH, CCWCTH, or WIDEBAND. • Enter Least Idle (LIDL) for a 2-way trunk group with a far-end link list switch with most idle select sequence. • Enter most idle (MIDL) for a 2-way trunk group with a far-end link switch with least idle select sequence, or far end is not a link list switch, or trunk group direction is incoming or outgoing. • Enter ascending sequence (ASEQ) to use a trunk group member immediately following the last trunk member chosen. • Enter descending sequence (DSEQ) to select a trunk group member immediately preceding a trunk group member in use is the next trunkmember chosen. • Enter clockwise circular trunk hunting (CWCTH) to start a clockwise, circular search of the route list starting at the most recently released (MRR) trunk. The MRR reference point changes constantly. The search selects the first idle trunk. • Enter counterclockwise circular trunk hunting (CCWCTH) to start a counterclockwise, circular search of the route list starting at the MRR trunk. The search selects the first idle trunk. • Enter WIDEBAND to allow the agent to handle wideband calls. Only new trunk groups may specify wideband. Datafill the WBSELSEQ, WBGRPING, and WBSEARCH refinements.

TRKGRP (PRA250 trunk group type) (continued)

Refinement	Subfield or refinement	Entry	Explanation and action
	WBSELSEQ		WIDEBAND SELECTION SEQUENCE. Enter ASEQ or DSEQ to define how the UCS DMS-250 switch locates an idle wideband trunk for call termination. ***Note:*** Nortel Networks recommends setting ASEQ up at one end of the trunk and DSEQ at the other end to inhibit the occurrence of glare. Glare is the simultaneous seizure of a trunk by switches at each end.
		ASEQ	ASCENDING SEQUENCE. Enter ASEQ to indicate the switch should check first-defined DS1 span's lowest-numbered DS0 channel and search through the last-defined DS1 span's DS0s.
		DSEQ	DESCENDING SEQUENCE. Enter DSEQ to indicate the switch should check last-defined T1 span's highest-numbered DS0 channel and search through the first-defined span's DS0s.
	WBGRPING		WIDEBAND GROUPING. Enter FIXED, FLEXIBLE, or FLOATING to describe the slot arrangement used in call processing.
		FIXED	Enter FIXED to indicate *n* consecutive channels on the DS1 span begin and end on exact boundaries (*n*=6 or *n*=24 for H0 and H11 calls only).
		FLEXIBLE	Enter FLEXIBLE to indicate that the slot arrangement begins at any DS0 channel on the DS1 span (*n*=2 to 24).
		FLOATING	Enter FLOATING to indicate *n* consecutive channels on the DS1 span (*n*=2 to 24).
	WBSEARCH		WIDEBAND SEARCH. Enter BESTFIT or FIRSTFIT to define how the UCS DMS-250 switch locates a group of time slots.

TRKGRP (PRA250 trunk group type) (continued)

Refinement	Subfield or refinement	Entry	Explanation and action
		BESTFIT	Enter BESTFIT to reduce fragmentation by selecting the *n* channels according to a best fit, where the largest groups of contiguous channels remain available for large bandwidth calls. Nortel Networks recommends using BESTFIT for 1-way trunks.
		FIRSTFIT	Enter FIRSTFIT to inhibit glare by selecting the first available *n* slot.
TRAFCLS		NIL, LINE, INTERCEPT, REPAIR, XX, IR, CA, DD, IA, IE, IT, LW, MN, MT, OA, RC, SP, TC, TE, TG, TM, TO, TS, TT, TW, AL, AN, CB, CD, CP, CS, DA, DS, IN, MA, MB, NT, OF, OW, PS, RR, RS, SC, SO, TA, TI, TK, TP, VC, VR, WE, MI, ON, BL, IM, OT, DL, DB, ID	TRAFFIC CLASS. Enter the traffic usage class where the trunk group is assigned. This field is not used by UCS DMS-250 switch software, but is provided for the convenience of operating companies who wish to associate their own traffic class code with each trunk group.
TIMEBIAS		-12 to 12	TIMEBIAS. Enter the timebias. If the originating trunk group and the UCS DMS-250 switch are in different time zones, specify in one-hour increments the time difference between them. This shows the subscriber's true origination time which is needed to apply the restricted usage by date and time feature (for example, if a call originates in California and enters the UCS DMS-250 switch in Texas, the TIMEBIAS is -2 hours). Enter zero if there is no time zone difference.

TRKGRP (PRA250 trunk group type) (continued)

Refinement	Subfield or refinement	Entry	Explanation and action
SNPA		numeric or NIL	SERVING NUMBERING PLAN. Enter the 3-digit numbering plan area the trunk serves. The default is 001.
LTID		see refinements	LOGICAL TERMINAL IDENTIFIER. LTID is an optional field. Datafill the LTGRP and LTNUM refinements.
	LTGRP	ISDN or ISUP	LOGICAL TERMINAL GROUP. Enter ISDN or ISUP.
	LTNUM	1 to 1022	LOGICAL TERMINAL NUMBER. Enter a number between 1 and 1022.
ZONE		0 to 9, A, B, C, AUTO	ZONE. Enter a zone type number. Use this field to calculate if looparound IMTs with echo canceller are needed. Add the ZONE number assigned to the originating trunk group to the ZONE number assigned to the first choice in the terminating route list.
FASTIDGT		2 to 30	FAST INTERDIGITAL TIME. Enter the fast interdigital time. Fast interdigital timing is used for international dialing. A minimum and maximum number of digits to collect is specified in the Standard Pretranslator table STDPRTCT for IDDD calls. (Refer to table STDPRT in this document for further information.) The UCS DMS-250 switch uses the Partial Dial Timing parameter specified in table TRKSGRP for the minimum required digits and uses the fast interdigital timing value for the remaining digits. This field is only used as a digit collection timer if the STDPRTCT selector IN is used. Table TRKSGRP digit collection timer PARTDIAL is used if the operating company personnel use selector IP in table STDPRTCT.
BCNAME		Valid BC datafilled in table BCDEF	BEARER CAPABILITY NAME. Enter any value previously defined in table BCDEF. This field contains the bearer capability name be associated with the trunk.

TRKGRP (PRA250 trunk group type) (continued)

Refinement	Subfield or refinement	Entry	Explanation and action
TSUSR		0 to 254	TRUNK GROUP SUSPEND/RESUME TIMER. Enter the timing value used for suspend timing. Range of values for TSUSR is 0 to 254, in 100-ms (.1-second) increments. The default is 160 (16 seconds). The total value of the timer is 0 to 25.4 seconds. When this option is not datafilled or is datafilled to 0, no suspend timing is done and the SUSPEND is treated as a RELEASE.
OPTION			OPTION. Datafill this field to specify optional features; enter up to 35 options.
		MCCS	MECHANIZED CALLING CARD SERVICE. This option is not datafillable when the Basic Calling Card Services option is set to IDLE. When the option is ON, option MCCS is datafillable. The ON to IDLE transition requires that the datafill in this option be removed.
		OHQ	OFFHOOK QUEUING. Enter OHQ if incoming calls from this trunk group are allowed to utilize the off-hook queuing capability on a terminating trunk group; otherwise, omit.
		OHQTERM	TERMINATING OFFHOOK QUEUING. Enter OHQTERM if calls terminating on this trunk group are offered off-hook queuing; otherwise, omit.
		IEXCLINX	INCOMING EXCLUSION INDEX. Enter the IEXCLINX option when the trunk group is incoming or 2-way. Datafill the IEXCLINX refinement.
	IEXCLINX	0 to 255	INCOMING EXCLUSION INDEX. Enter a number between 0 and 255 to index into table IEXCLUDE. Table IEXCLUDE indicates NPAs and NXXs to block or allow.
		VPNSIX	VIRTUAL PRIVATE NETWORK 6 DIGIT DIALING. Enter VPNSIX to enable 6-digit dialing for VPN services. Omit VPNSIX to disable.

TRKGRP (PRA250 trunk group type) (continued)

Refinement	Subfield or refinement	Entry	Explanation and action
		ACPROMPT	ACCOUNT CODE PROMPT. Enter ACPROMPT to enable an audible prompt before account code input. Omit ACPROMPT to disable.
		ALTTRTMT	ALTERNATE TREATMENTS. Enter ALTTRMT if calls originating on this trunk group use the ALTERNAT subtable within the TMTCNTL table when routing to a treatment.
		RLT	RELEASE LINK TRUNK. This value indicates that this trunk is capable of release link trunk (RLT) processing. Before this option can be datafilled, the ENSR Enhanced Network Service SOC option must be turned on.
		EMINDEX	Enter EMINDEX and datafill the EMINDEX refinement.
	EMINDEX	0 to 13	Enter a value from 0 to 13.
		AUDBTRMT	AUDIBLE TREATMENT. Enter AUDBTRMT to enable audible treatment support on this trunk. Omit AUDBTRMT to disable.
		VARDIAL	VARIABLE LENGTH DIALING PLAN. Enter VARDIAL to enable variable length customer dialing. Omit VARDIAL to disable.
		ENHANSUP	ENHANCED ANSWER SUPERVISION. Enter ENHANSUP to define if call duration timing starts when the terminating party provides an answer signal (off-hook, answer messages, or connect) or when the terminator sends an EOP, progress/alert, or ACM (depending on the terminator's signaling type).
		DTNOTSUB	When OPTION=DTNOTSUB, datafill the DT_TYPE refinement.
	DT_TYPE	C or NODT	Enter C or NODT. Enter C for carrier dialtone, NODT for no dialtone.
		BLOCKNB	Currently not applicable.

TRKGRP (PRA250 trunk group type) (continued)

Refinement	Subfield or refinement	Entry	Explanation and action
		NETSEC	NETWORK SECURITY. When this option is set on the switch, the switch generates a NETS601 log report for two cases: • When answer is detected at the terminating end of an international call. • When answer is detected on a World Zone One call to an NPA datafilled in table WZONE.
		CDRTMPLT	CDR TEMPLATE. Use this option to define a template for formatting CDRs. Refer to the OPTION=CDRTMPLT section for refinement datafill.
		IPTRUNK	IPTRUNK. Enter IPTRUNK to indicate that the trunk is connected directly to an Intelligent Peripherals (IPs) using SS7 signalling (the trunk can be located on either a local SSP or a remote SSP).
		JIP	JURISDICTION INFORMATION PARAMETER. Enter JIP to specify a JIP for a call when one is not available from the incoming call. Refer to section OPTION=JIP for refinement datafill.
		INFODIGS	INFO DIGIT REVERSAL. Datafill ORDER refinement.This feature provides the ability to reverse the digit order of info digits in outgoing Primary Rate Interface (PRI) SETUP messages.
	ORDER	NORMAL, REVERSE	ORDER. Enter NORMAL or REVERSE value. NORMAL is the default value.
		BCHNLMEM	BCHNLMEM. When BCHNLMEM is datafilled in a tuple, the functionality is turned on. When the BNCHNLMEM is not datafilled, functionality is turned off.

TRKGRP (PRA250 trunk group type) (continued)

CUSTOMER=UCSUST

When CUSTOMER=UCSUST, datafill the following:

TRKGRP (PRA250 trunk group type) (continued)

Field	Subfield or refinement	Entry	Explanation and action
SELSEQ		LIDL, MIDL, ASEQ, DSEQ, CWCTH, CCWCTH, WIDEBAND	SELECT SEQUENCE. Enter one of the following: LIDL, MIDL, ASEQ, DSEQ, CWCTH, CCWCTH, or WIDEBAND. • Enter Least Idle (LIDL) for a 2-way trunk group with a far-end link list switch with most idle select sequence. • Enter most idle (MIDL) for a 2-way trunk group with a far-end link switch with least idle select sequence, or far end is not a link list switch, or trunk group direction is incoming or outgoing. • Enter ascending sequence (ASEQ) to use a trunk group member immediately following the last trunk member chosen. • Enter descending sequence (DSEQ) to select a trunk group member immediately preceding a trunk group member in use is the next trunkmember chosen. • Enter clockwise circular trunk hunting (CWCTH) to start a clockwise, circular search of the route list starting at the most recently released (MRR) trunk. The MRR reference point changes constantly. The search selects the first idle trunk. • Enter counterclockwise circular trunk hunting (CCWCTH) to start a counterclockwise, circular search of the route list starting at the MRR trunk. The search selects the first idle trunk. • Enter WIDEBAND to allow the agent to handle wideband calls. Only new trunk groups may specify wideband. Datafill the WBSELSEQ, WBGRPING, and WBSEARCH refinements.

TRKGRP (PRA250 trunk group type) (continued)

Field	Subfield or refinement	Entry	Explanation and action
	WBSELSEQ		WIDEBAND SELECTION SEQUENCE. Enter ASEQ or DSEQ to define how the UCS DMS-250 switch locates an idle wideband trunk for call termination. ***Note:*** Northern Telecom (Nortel) recommends setting ASEQ up at one end of the trunk and DSEQ at the other end to inhibit the occurrence of glare. Glare is the simultaneous seizure of a trunk by switches at each end.
		ASEQ	ASCENDING SEQUENCE. Enter ASEQ to indicate the switch should check first-defined DS1 span's lowest-numbered DS0 channel and search through the last-defined DS1 span's DS0s.
		DSEQ	DESCENDING SEQUENCE. Enter DSEQ to indicate the switch should check last-defined T1 span's highest-numbered DS0 channel and search through the first-defined span's DS0s.
	WBGRPING		WIDEBAND GROUPING. Enter FIXED, FLEXIBLE, or FLOATING to describe the slot arrangement used in call processing.
		FIXED	Enter FIXED to indicate *n* consecutive channels on the DS1 span begin and end on exact boundaries (*n*=6 or *n*=24 for H0 and H11 calls only).
		FLEXIBLE	Enter FLEXIBLE to indicate that the slot arrangement begins at any DS0 channel on the DS1 span (*n*=2 to 24).
		FLOATING	Enter FLOATING to indicate *n* consecutive channels on the DS1 span (*n*=2 to 24).
	WBSEARCH		WIDEBAND SEARCH. Enter BESTFIT or FIRSTFIT to define how the UCS DMS-250 switch locates a group of time slots.

TRKGRP (PRA250 trunk group type) (continued)

Field	Subfield or refinement	Entry	Explanation and action
		BESTFIT	Enter BESTFIT to reduce fragmentation by selecting the *n* channels according to a best fit, where the largest groups of contiguous channels remain available for large bandwidth calls. Nortel recommends using BESTFIT for 1-way trunks.
		FIRSTFIT	Enter FIRSTFIT to inhibit glare by selecting the first available *n* slot.
TRAFCLS		NIL, LINE, INTERCEPT, REPAIR, XX, IR, CA, DD, IA, IE, IT, LW, MN, MT, OA, RC, SP, TC, TE, TG, TM, TO, TS, TT, TW, AL, AN, CB, CD, CP, CS, DA, DS, IN, MA, MB, NT, OF, OW, PS, RR, RS, SC, SO, TA, TI, TK, TP, VC, VR, WE, MI, ON, BL, IM, OT, DL, DB, ID	TRAFFIC CLASS. Enter the traffic usage class where the trunk group is assigned. This field is not used by UCS DMS-250 switch software, but is provided for the convenience of operating companies who wish to associate their own traffic class code with each trunk group.
TIMEBIAS		-12 to 12	TIMEBIAS. Enter the timebias. If the originating trunk group and the UCS DMS-250 switch are in different time zones, specify in one-hour increments the time difference between them. This shows the subscriber's true origination time which is needed to apply the restricted usage by date and time feature (for example, if a call originates in California and enters the UCS DMS-250 switch in Texas, the TIMEBIAS is -2 hours). Enter zero if there is no time zone difference.

TRKGRP (PRA250 trunk group type) (continued)

Field	Subfield or refinement	Entry	Explanation and action
SNPA		numeric or NIL	SERVING NUMBERING PLAN. Enter the 3-digit numbering plan area the trunk serves. The default is 001.
LTID		see refinements	LOGICAL TERMINAL IDENTIFIER. LTID is an optional field. Datafill the LTGRP and LTNUM refinements.
	LTGRP	ISDN or ISUP	LOGICAL TERMINAL GROUP. Enter ISDN or ISUP.
	LTNUM	1 to 1022	LOGICAL TERMINAL NUMBER. Enter a number between 1 and 1022.

OPTION=CDRTMPLT

When OPTION=CDRTMPLT, datafill the TMPLTIDX and USEEDIT refinements.

Refinement	Subfield or refinement	Entry	Explanation and action
TMPLTIDX		Valid name datafilled in table CDRTMPLT	TEMPLATE INDEX. When SOC option UBFR0001 is enabled, you can use table CDRTMPLT to create new CDR template. For more information on CDR templates, see *UCS DMS-250 Billing Records Application Guide.*
USEEDIT		N or Y	USE EDIT. Enter N to use the active version of the CDR template. Y indicates that the edit version is used. ***Note:*** This field is used for testing purposes only. It should be set to N, which is the default.

OPTION=JIP

The Jurisdiction Information Parameter (JIP) option in table TRKGRP allows a default JIP to be specified for a trunk group when a JIP is not received in the incoming call. The JIP parameter carries geographic and service provider information that is associated with the calling party. The JIP parameter also contains the originating switch's LRN (Local Routing Number).

TRKGRP (PRA250 trunk group type) (continued)

When OPTION=JIP, datafill the COUNT, TWO_DIGS, and EIGHT_DIGS refinements.

Refinement	Subfield or refinement	Entry	Explanation and action
COUNT		SIX or TEN	COUNT. Enter SIX or TEN to specify the number of digits in the JIP.
TWO_DIGS		N, 0 to 9, B, C, D, E, F	TWO_DIGS. Enter two digits of the following characters: N, 0, 1, 2, 3, 4, 5, 6, 7, 8, 9, B, C, D, E, F.
EIGHT_DIGS		N, 0 to 9, B, C, D, E, F	EIGHT_DIGS. Enter eight digits of the following characters: N, 0, 1, 2, 3, 4, 5, 6, 7, 8, 9, B, C, D, E, F.

Listed below is an example of datafilling a ten digit JIP.

> Enter the following values for the JIP options fields:

- COUNT: TEN

- TWO_DIGS: 89

- EIGHT_DIGS: 01234567

This example datafill would send a JIP of “0123456789” when establishing a terminating connection. The TWO_DIGS are appended at the end of the EIGHT_DIGS.

‘N’, ‘B’, ‘C’, ‘D’, ‘E’, or ‘F’ can be datafilled in either of the TWO_DIGS or EIGHT_DIGS fields. Table control displays these digits as ‘0’. However, when used in establishing the terminating connection, it is sent as follows:

Datafilled Digit	Digit Set To The Terminating Party
N	0
B	D
C	E
D	D

TRKGRP (PRA250 trunk group type) (continued)

Datafilled Digit	Digit Set To The Terminating Party
E	E
F	F

When adding a complete tuple in table TRKGRP in non-prompt mode, ‘JIP’ followed by a ten digit number can be entered. Below are example CI commands for adding a tuple with a JIP of ‘0123456789’:

```
> ADD PRI922DRN2 PRA250 0 NPDGP NCIT USC DSEQ NIL 0 214 +

> ISDN 922 $ 0 4 VOICE_DATA 160 JIP 0123456789
```

Listed below is an example of datafilling a six digit JIP.

> Enter the following values for the JIP option fields:

- COUNT: SIX

- TWO_DIGS: 89

- EIGHT_DIGS: 12345678

This example datafill would send a JIP of “123456” when establishing a terminating connection. The TWO_DIGS as well as the last two digits of the EIGHT_DIGS are discarded. Only the first six digits of the EIGHT_DIGS field are used.

‘N’, ‘B’, ‘C’, ‘D’, ‘E’, or ‘F’ can be datafilled in either of the TWO_DIGS or EIGHT_DIGS fields. Table control displays these digits as ‘0’. However, when used in establishing the terminating connection, it is sent as follows:

Datafilled Digit	Digit Set To The Terminating Party
N	0
B	D
C	E
D	D
E	E
F	F

TRKGRP (PRA250 trunk group type) (end)

When adding a complete tuple in table TRKGRP in non-prompt mode, 'JIP' followed by a six digit number can be entered. Below are example CI commands for adding a tuple with a JIP of '123456':

```
> ADD PRI922DRN2 PRA250 0 NPDGP NCIT USC DSEQ NIL 0 214 +

> ISDN 922 $ 0 4 VOICE_DATA 160 JIP 123456
```

Datafill example

The following example shows datafill for table TRKGRP (PRA250 trunk group type).

```
GRPKEY GRPTYP TRAFSNO PADGRP NCCLS GRPINFO
_____________________________________________

PRI961LPN0 PRA250 0 NPDGP NCIT UCS MIDL NIL 0 214 (ISDN 960) $0 4
VOICE_DATA 160 (OHQ ) (OHQTERM ) $

PRI961LPN1 PRA250 0 NPDGP NCIT UCS MIDL NIL 0 214 (ISDN 961) $ 0 4
VOICE_DATA 160 (MCCS ) (OHQ ) (OHQTERM ) (ACPROMPT ) $

PRI961LPN2 PRA250 0 NPDGP NCIT UCS MIDL NIL 0 214 (ISDN 962) $ 0 4
64KRES 160 $
```

Table history

UCS17

Added option JIP..

UCS14

Added option INFODIGS with subfield ORDER with values of NORMAL and REVERSE (SR60098029) Added option BCHNLMEM (S60324154).

UCS13

Removed UCS07 and UCS07FLEX values from table OPTION=CDRTMPLT (A60007776).

UCS12

The module was updated for editorial comments.

UCS08

The IPTRUNK and JIP options were added.

TRKGRP type ROTL

Remote Office Test Line Trunk Group Type

Trunk group type ROTL is used for remote line testing in a DMS office.

This trunk group is represented in table CLLI by pseudo-common language location identifier (CLLI) ROTLTP.

Trunk cards for table TRKGRP and group type ROTL have product engineering code (PEC) NT3X91AA (remote office test line circuit).

Datafill

The following table lists the datafill for table TRKGRP type ROTL.

Field descriptions (Sheet 1 of 3)

Field	Subfield or refinement	Entry	Explanation and action
GRPKEY		see subfield	*Group key* This field consists of subfield CLLI.
	CLLI	ROTLTP	*Common language location identifier* Enter the pseudo-common language location identifier (CLLI) code ROTLTP.
GRPINFO		see subfields	*Variable group data* This field consists of subfields GRPTYP, TRAFSNO, PADGRP, NCCLS, TRAFCLS, PRTNM, SNPA, and SCRNCL. Refer to section “General field information" in table TRKGRP for information concerning an alternate structure for this field that results from the datafill of table CUSTFLDS.
	GRPTYP	ROTL	*Group type* Enter ROTL to specify the group type for remote office test line trunks.
	TRAFSNO	numeric (0)	*Traffic separation number* Enter 0 (zero) to specify that a traffic separation number is not required.
	PADGRP	alphanumeric (1 to 5 characters)	*Pad group* Enter the name of the pad group assigned to the trunk group in table PADDATA. For more information, refer to table PADDATA.

Field descriptions (Sheet 2 of 3)

Field	Subfield or refinement	Entry	Explanation and action
	NCCLS	NCBN NCID NCIM NCIT NCLT NCOF NCON NCOT NCRT NCTC or NOSC	Enter the operational measurements (OM) no-circuit class (NCCLS) to indicate which OM register is incremented if treatment GNCT (generalized no circuit) occurs. The initial value for this trunk group type is NCOT (no circuit other trunk). For more information, refer to table TRKGRP and the *Operational Measurements Reference Manual*.
	TRAFCLS	alphabetic (2 characters)	*Traffic usage class* Enter the traffic usage class assigned to the trunk group. For more information, refer to table TRKGRP.
	PRTNM	alphanumeric (1 to 4 characters) or NPRT	*Standard pretranslator name* If standard pretranslation is required, enter the name of the standard pretranslator defined in table STDPRTCT to which digit translation is to route after the receipt of the first digit. If pretranslation is not required, enter NPRT (no pretranslation). If office parameter TRK_OOS_CHK_ON in table OFCVAR is set to Y, all trunks in the group must be busy before the value of this field can be changed by data modification order (DMO).

TRKGRP type ROTL (continued)

Field descriptions (Sheet 3 of 3)

Field	Subfield or refinement	Entry	Explanation and action
	SNPA	numeric (3 digits)	*Serving NPA* Enter the serving NPA code for the trunk group. This code, which is specified in table HNPACODE, specifies routing for digit translation. If office parameter TRK_OOS_CHK_ON in table OFCVAR is set to Y, all trunks in the group must be busy before the value of this field can be changed by DMO.
	SCRNCL	alphanumeric (1 to 4 characters) or NSCR	*Class-of-service screening table name* If class-of-service screening is required, enter the name of the class-of-service screening table (datafilled in table SCRNCLAS) to which digit translation routes. If class-of-service screening is not required, enter NSCR (no screening).

Datafill example

The following example shows sample datafill for table TRKGRP type ROTL. This example has been datafilled as follows:

- The trunk group is represented by the pseudo-CLLI ROTLTP
- The group type is ROTL.
- The outgoing traffic separation number is set to 0 (zero).
- ELO is the pad group assigned to the trunk group
- NCOT is the no-circuit class.
- The traffic class is RS.
- The trunk group requires no pretranslation.

TRKGRP type ROTL (end)

- The serving NPA is 613.
- The trunk group requires no class-of-service screening.

MAP display example for table TRKGRP type ROTL

```
GRPKEY      GRPINFO
_____________________________________________________

ROTLTP      ROTL 0 ELO NCOT RS NPRT 613 NSCR
```

TRKGRP type T101

101 Communication Test Line Trunk Group Type

Trunk group type T101, which can be incoming or outgoing, is used for 101 tests in DMS offices.

Incoming 101 test lines use dial pulse (DP), Digitone (DT), and multifrequency (MF) dialing.

Datafill

The following table lists the datafill for table TRKGRP type T101.

Field descriptions (Sheet 1 of 5)

Field	Subfield or refinement	Entry	Explanation and action
GRPKEY		see subfield	*Group key* This field consists of subfield CLLI.
	CLLI	alphanumeric (1 to 16 characters)	*Common language location identifier* Enter the common language location identifier (CLLI) code assigned to the trunk group in table CLLI.
GRPINFO		see subfields	*Variable group data* This field consists of subfields GRPTYP, TRAFSNO, PADGRP, NCCLS, DIR, TRAFCLS, SELSEQ, PRTNM, SCRNCL, and SNPA. Refer to section “General field information" in table TRKGRP for information on an alternate structure for this field that results from the datafill of table CUSTFLDS.
	GRPTYP	T101	*Group type* Enter T101 to specify the group type for 101 test lines.

Field descriptions (Sheet 2 of 5)

Field	Subfield or refinement	Entry	Explanation and action
	TRAFSNO	numeric (0 to 127)	*Traffic separation number* Enter the incoming and outgoing traffic separation number assigned to the trunk group. If a traffic separation number is not required, enter 0 (zero). For switches with software package NTX085AA (Traffic Separation Peg Count), enter a value from 1 to the value of office parameter TFAN_OUT_MAX_NUMBER in table OFCENG. For switches without software package NTX085AA, enter a value from 1 to 15. Incoming and outgoing traffic separation numbers 1 to 9 should be reserved for generic traffic separation numbers. For more information, refer to table TFANINT.
	PADGRP	alphanumeric (1 to 5 characters)	*Pad group* Enter the name of the pad group assigned to the trunk group in table PADDATA. For more information, refer to table PADDATA.
	NCCLS	NCBN NCID NCIM NCIT NCLT NCOF NCON NCOT NCRT NCTC or NOSC	*Operational measurements no-circuit class* Enter the operational measurements (OM) no-circuit class (NCCLS) to indicate which OM register is incremented if treatment GNCT (generalized no-circuit) occurs. If the trunk group direction is outgoing, the initial value for this trunk group type is NCOT (no-circuit other trunk). If the trunk group direction is incoming, this field is not required. Enter NCRT (no-circuit). For more information, refer to table TRKGRP and the *Operational Measurements Reference Manual*.

TRKGRP type T101 (continued)

Field descriptions (Sheet 3 of 5)

Field	Subfield or refinement	Entry	Explanation and action
	DIR	IC or OG	*Direction* This field specifies the trunk group direction. Enter IC for incoming or OG for outgoing. If office parameter TRK_OOS_CHK_ON in table OFCVAR is set to Y (yes), all trunks in the group must be busy before the value of this field can be changed by data modification order (DMO).
	TRAFCLS	alphabetic (2 characters)	*Traffic usage class* Enter the traffic usage class assigned to the trunk group. For more information, refer to table TRKGRP.
	SELSEQ	ASEQ DSEQ CWCTH CCWCTH LIDL or MIDL	*Select sequence* If the trunk group direction is incoming, sequential selection does not apply. Enter MIDL. If the trunk group is outgoing, the far end is not a link list switcher, and feature package NTX244AB (Enhanced Sequential Trunk Hunting) is present, base the selection order on the order of the trunks in table TRKMEM, and enter • CWCTH or CCWCTH for clockwise or counterclockwise circular trunk hunting from the most recently released trunk in the trunk group, if the far end is CCWCTH or CWCTH respectively, or • ASEQ or DSEQ for ascending or descending sequential selection, if far end is DSEQ or ASEQ respectively. Entries outside this range are invalid. For more information, refer to table TRKGRP.

Field descriptions (Sheet 4 of 5)

Field	Subfield or refinement	Entry	Explanation and action
			Note: A trunk group trunk selection method cannot be changed. If a change in the selection method is required, a new trunk group must be created with the required trunk selection method. The individual trunks with the old selection sequence must be deleted from the old trunk group and then added to the new trunk group. For an existing trunk group, the selection sequence may be changed to ASEQ from DSEQ or from DSEQ to ASEQ if all the trunk members are installation busy (INB) or unequipped (UNEQ). Refer to table TRKGRP for additional information concerning field SELSEQ.
	PRTNM	alphanumeric (1 to 4 characters) or NPRT	*Standard pretranslator name* If standard pretranslation is required, enter the name of the standard pretranslator defined in table STDPRTCT to which digit translation is to route after the receipt of the first digit. If pretranslation is not required, enter NPRT (no pretranslation). If office parameter TRK_OOS_CHK_ON in table OFCVAR is set to Y (yes), all trunks in the group must be busy before the value of this field can be changed by DMO.

TRKGRP type T101 (continued)

Field descriptions (Sheet 5 of 5)

Field	Subfield or refinement	Entry	Explanation and action
	SCRNCL	alphanumeric (1 to 32 characters or NSCR	*Class-of-service screening table name* If class-of-service screening is required, enter the name of the class-of-service screening table (datafilled in table SCRNCLAS) to which digit translation routes. If class-of-service screening is not required, enter NSCR (no screening).
	SNPA	numeric (3 digits)	*Serving numbering plan area* Enter the code in table HNPACODE to which translation routes for digit translation. If office parameter TRK_OOS_CHK_ON in table OFCVAR is set to Y, all trunks in the group must be busy before the value of this field can be changed by DMO.

Datafill example

The following example shows sample datafill for table TRKGRP type T101. This example is datafilled in accordance with the following information:

- The code in table CLLI for the trunk group is T101GRP1IC.
- The trunk group type is T101.
- The incoming traffic separation number 29 is assigned to the trunk group.
- TLD is the pad group name assigned to the trunk group.
- NCRT is the no-circuit class.
- The direction is incoming (IC).
- The traffic class is miscellaneous (MI).
- The select sequence, which is not required is not required, is set to MIDL.
- Pretranslation and class-of-service screening are not required.
- The trunk group is assigned to SNPA 613.

TRKGRP type T101 (end)

MAP display example for table TRKGRP type T101

```
GRPKEY      GRPINFO
_____________________________________________________________

T101GRP11C   T101 29 TLD NCRT IC MI MIDL NPRT NSCR 613
```

TRKGRP (R2 trunk group type)

Table name

TRKGRP (R2 trunk group type) table

Functional description

This trunk group type assigns R2 trunk groups for originating, terminating, and 2-way calls.

Datafill sequence and implications

Tables ACTCTL, SIGACT, ACTSIG, CATCLASS, R2PROT, and CLLI must be datafilled before table TRKGRP (R2 trunk group type).

Table size

Field SIZE in table DATASIZE specifies the number of trunk groups that can be datafilled. The maximum number of groups that can be filled is 8191.

Datafill

The following table lists datafill for table TRKGRP (R2 trunk group type).

Field descriptions (Sheet 1 of 8)

Field	Subfield or refinement	Entry	Explanation and action
GRPKEY		Valid CLLI datafilled in table CLLI	GROUP KEY. Enter the CLLI assigned to the R2 trunk group.
GRPTYP		R2	GROUP TYPE. Enter the trunk group type R2.

TRKGRP (R2 trunk group type) (continued)

Field descriptions (Sheet 2 of 8)

Field	Subfield or refinement	Entry	Explanation and action
TRAFSNO		0 to 127	TRAFFIC SEPARATION NUMBER. Select entry as follows: If the switch has the optional traffic separation software, enter the outgoing traffic separation number, 1-127, assigned to intersection. If traffic separation is not required, enter zero. If the switch has software package that includes the Traffic Separation Peg Count feature package, the range of values for the outgoing traffic separation numbers are dependent upon parameter TFAN_OUT_MAX_NUMBER in the OFCENG table. For a switch without the Traffic Separation Peg Count feature package, the range of values for the traffic separation numbers is 0-15. It is recommended that outgoing traffic separation numbers 1 through 9 be reserved for generic traffic separation numbers. Further information concerning traffic separation numbers can be found in table TFANINT.
PADGRP		alphanumeric (1 to 5 characters)	PAD GROUP. Enter the name of the pad group assigned to the trunk group in table PADDATA. Default is set at NPGP for no pad group.
NCCLS		NCBN, NCOF, NCIT, NCID, NCTC, NOSC, NCRT, NCOT, NCIM, NCON, or NCLT	NO CIRCUIT CLASS. This field specifies the Operational Measurement incremented if treatment GNCT occurs. The default is set to NCIT for no-circuit intertoll.
COS		0 to 119	CLASS OF SERVICE. Enter the class of service code used in screening calls.

TRKGRP (R2 trunk group type) (continued)

Field descriptions (Sheet 3 of 8)

Field	Subfield or refinement	Entry	Explanation and action
DIR		IC, OG, 2W	DIRECTION. Enter IC (incoming), OG (outgoing), or 2W (two way) to define the direction of traffic flow.
PRTNM		NPRT or a valid pretranslator datafilled in table STDPRTCT	STANDARD PRETRANSLATOR NAME. Enter a 4 character pretranslator name if standard pretranslation is required. Enter NPRT for no pretranslation.
SELSEQ			SELECT SEQUENCE. Enter one of the following: LIDL, MIDL, ASEQ, DSEQ, CWCTH, CCWCTH, or WIDEBAND.
		LIDL	Enter Least Idle (LIDL) for a 2-way trunk group with a far-end link list switch with most idle select sequence.
		MIDL	Enter most idle (MIDL) for a 2-way trunk group with a far-end link switch with least idle select sequence, or far end is not a link list switch, or trunk group direction is incoming or outgoing.
		ASEQ	Enter ascending sequence (ASEQ) to use a trunk group member immediately following the last trunk member chosen.
		DSEQ	Enter descending sequence (DSEQ) to select a trunk group member immediately preceding a trunk group member in use is the next trunk member chosen.
		CWCTH	Enter clockwise circular trunk hunting (CWCTH) to start a clockwise, circular search of the route list starting at the most recently released (MRR) trunk. The MRR reference point changes constantly. The search selects the first idle trunk.
		CCWCTH	Enter counterclockwise circular trunk hunting (CCWCTH) to start a counterclockwise, circular search of the route list starting at the MRR trunk. The search selects the first idle trunk.

TRKGRP (R2 trunk group type) (continued)

Field descriptions (Sheet 4 of 8)

Field	Subfield or refinement	Entry	Explanation and action
		WIDEBAND	Enter WIDEBAND to allow the agent to handle wideband calls. Only new trunk groups may specify wideband. When SELSEQ=WIDEBAND, datafill the WBSELSEQ, WBGRPING, and WBSEARCH refinements.
	WBSELSEQ		WIDEBAND SELECTION SEQUENCE. Enter ASEQ or DSEQ to define how the UCS DMS-250 switch locates an idle wideband trunk for call termination. ***Note:*** Nortel (Northern Telecom) recommends setting ASEQ up at one end of the trunk and DSEQ at the other end to inhibit the occurrence of glare. Glare is the simultaneous seizure of a trunk by switches at each end.
		ASEQ	ASCENDING SEQUENCE. Enter ASEQ to indicate the switch should check first-defined DS1 span's lowest-numbered DS0 channel and search through the last-defined DS1 span's DS0s.
		DSEQ	DESCENDING SEQUENCE. Enter DSEQ to indicate the switch should check last-defined T1 span's highest-numbered DS0 channel and search through the first-defined span's DS0s.
	WBGRPING		WIDEBAND GROUPING. Enter FIXED, FLEXIBLE, or FLOATING to describe the slot arrangement used in call processing.
		FIXED	Enter FIXED to indicate *n* consecutive channels on the DS1 span begin and end on exact boundaries (*n*=6 or *n*=24 for H0 and H11 calls only).
		FLEXIBLE	Enter FLEXIBLE to indicate that the slot arrangement begins at any DS0 channel on the DS1 span (*n*=2 to 24).

TRKGRP (R2 trunk group type) (continued)

Field descriptions (Sheet 5 of 8)

Field	Subfield or refinement	Entry	Explanation and action
		FLOATING	Enter FLOATING to indicate *n* consecutive channels on the DS1 span (*n*=2 to 24).
	WBSEARCH		WIDEBAND SEARCH. Enter BESTFIT or FIRSTFIT to define how the UCS DMS-250 switch locates a group of time slots.
		BESTFIT	Enter BESTFIT to reduce fragmentation by selecting the *n* channels according to a best fit, where the largest groups of contiguous channels remain available for large bandwidth calls. Nortel recommends using BESTFIT for 1-way trunks.
		FIRSTFIT	Enter FIRSTFIT to inhibit glare by selecting the first available *n* slot.
ODSCFLTR		5 to 255	ORIGINATING DISCONNECT FILTER. Enter the minimum amount of time in 10-millisecond increments that the switch observes a sustained on-hook signal from the originating central office before delcaring disconnect. The default is set to 16
ORIGFLTR		5 to 255	ORIGINATION FILTER. Enter the minimum amount of time in 10-millisecond increments that the switch observes origination from a central office before declaring origination. The default is set to 16.
TDSCFLTR		5 to 255	TERMINATING DISSCONNECT FILTER. Enter the minimum amount of time in 10-millisecond increments that the switch observes on-hook before delcaring disconnect. The default is set to 16.
ANSWFLTR		5 to 255	ANSWER FILTER. Enter the minimum amount of time in 10-millisecond increments that the switch observes off-hook from a central office before connecting a call. The default is set to 16.
INTRFACE		TOPS, PBX, PSTN, or OTHERS	INTERFACE. Enter the type of interface the trunk is going to use.

TRKGRP (R2 trunk group type) (continued)

Field descriptions (Sheet 6 of 8)

Field	Subfield or refinement	Entry	Explanation and action
TRAFCLS		NIL, LINE, INTERCEPT, REPAIR, XX, IR, CA, DD, IA, IE, IT, LW, MN, MT, OA, RC, SP, TC, TE, TG, TM, TO, TS, TT, TW, AL, AN, CB, CD, CP, CS, DA, DS, IN, MA, MB, NT, OF, OW, PS, RR, RS, SC, SO, TA, TI, TK, TP, VC, VR, WE, MI, ON, BL, IM, OT, DL, DB, or ID	TRAFFIC CLASS. Enter the traffic usage class where the trunk group is assigned.
OPART		0 to 999	ORIGINATING PARTION. Enter the originating partiion number to be associated with the trunk group and translated to a serving translation scheme for region code screening. The default is set to 7.
TPART		0 to 31	TERMINATING PARTITION. Enter the terminating partition number to be associated with the trunk group and translated to a serving translation scheme for region code screening. The default is set to 31.
ZONE		0 to 9, A, B, C, or AUTO	ZONE. Enter a zone type number. Use this field to calculate if looparound IMTs with echo canceller are needed. Add the Zone number asigned to the originating trunk group to the ZONE number assigned to the first choice in the terminating route list.
ADIN		0 to 99	AUTHCODE DATABASE INDEX NUMBER. Enter the ADIN index number. This field indexes into the AUTHCODE table. Enter 0 for the default value.

TRKGRP (R2 trunk group type) (continued)

Field descriptions (Sheet 7 of 8)

Field	Subfield or refinement	Entry	Explanation and action
AUTHDIAL		0	DIALED AUTHCODE DIGITS. This value is always zero for R2 type trunks.
VAUTHFLD		NOAUTHS or a 7-digit filed authcode	FILED AUTHCODE. Enter the authorization code digits to file with the trunk group. Enter NOAUTHS when the authorization code digits are not filed within the trunk group.
CPIXFER		ALWAYS, NEVER, CPNONLY, or CGNONLY	CALLING PARTY IDENTIFICATION TRANSFER. Enter when the CLI should be transferred to the terminator.
BCNAME		NILBC, SPEECH, 64KDATA, 64KX25, 56KDATA, DATAUNIT, 64KRES,3_1KHZ, 7_KHZ, VOICE_DATA, or 64K_RATE_AD_DATA	BEARER CAPABILITY NAME. Enter the type of information the trunk is going to be carrying.
LCDDUR		0 to 60 minutes	LONG CALL DISCONNECT DURATION. This parameter enables the unanswered call disconnect feature. Enter the number of minutes to set the unanswered call disconnect timing, from 0 to 60 minutes, in one-minute increments. This is the length of time a call is allowed to remain unanswered before a disconnect is forced. The default value of 0 deactivates unanswered call disconnect timing.
OPTIONS			
		ALTTRTMT	ALTERNATE TREATMENT. Calls originating on this trunk group used the ALTERNAT subtable of table TMTCNTL when routing to treatment.

TRKGRP (R2 trunk group type) (continued)

Field descriptions (Sheet 8 of 8)

Field	Subfield or refinement	Entry	Explanation and action
		CLIREQ	CALLING LINE IDENTIFIER REQUIRED. Enter CLIREQ to require a CLI for the call to go through. If it is not received, an ANI Database Failure treatment is given to the call. Datafill the CLISCRN refinement.
	CLISCRN	Y or N	CALLING LINE IDENTIFIER SCREEN. Enter Y if if screening is to be carried out on the incoming calls. This is only an option if CLIREQ is set to Y.
		CICRTE	CARRIER IDENTIFICATION CODE ROUTING. This parameter specifies whether translations and routing are based on the CIC received on the originating trunk. If set to no, CIC-based routing and translations are not performed.
		CICNADDR	CARRIER IDENTIFICATION CODE to be delivered to the terminator.

Datafill example

The following example shows sample datafill for table TRKGRP (R2 trunk group type).

MAP display example for table TRKGRP (R2 trunk group type)

```
GRPKEY GRPTYP TRAFSNO PADGRP NCCLS COS DIR PRTNM SELSEQ
ODSCFLTR ORIGFLTR TDSCFLTR ANSWFLTR INTRFACE TRAFCLS
OPART TPART ZONE ADIN AUTHDIAL VAUTHFLD CPIXFER BCNAME
LCDDUR OPTION
-------------------------------------------------------
NTTGRPIC R2 0 NPDGP NCIT 0 2W GA1 MIDL 16 7 16 16 PBX NIL
11 0 0 0 0 1234567 ALWAYS SPEECH 1 (ALTTRTMT Y) (CLIQREQ
Y) (CLISCRN Y)
```

Table history

UCS12

The module was updated for editorial comments.

TRKGRP (R2 trunk group type) (end)

UCS07

Trunk group type R2 is created.

TRKGRP type T2

Two-Way End Office Trunk Group Type

In a DMS office, two-way trunk group type T2 connects with an end or toll office for local, direct, or tandem switching.

If the trunk group uses dial pulse signaling and trunk-to-trunk overlap outpulsing is required, the variable number of digits format is required and the minimum number of digits is the number of digits received before overlap outpulsing starts.

Datafill sequence

For trunk group type T2, table TRIGGRP must be datafilled before table TRKGRP.

Refer to table TRKGRP for additional datafill dependencies.

Datafill

The following table lists the datafill for table TRKGRP type T2.

Field descriptions (Sheet 1 of 8)

Field	Subfield or refinement	Entry	Explanation and action
GRPKEY		see subfield	*Group key* This field consists of subfield CLLI.
	CLLI	alphanumeric (1 to 16 characters)	*Common language location identifier* Enter the common language location identifier (CLLI) code assigned to the trunk group in table CLLI.
GRPINFO		see subfields	*Variable group data* This field consists of subfields GRPTYP, TRAFSNO, PADGRP, NCCLS, TRAFCLS, SELSEQ, DIGSOUT, TOLL, PRTNM, SCRNCL, SNPA, ORIGSRCE, VDEVAR, and OPTIONS. Refer to section “General field information" in table TRKGRP for information on an alternate structure for this field that results from the datafill of table CUSTFLDS.
	GRPTYP	T2	*Group type* Enter the two-way end office trunk group type T2.

TRKGRP type T2 (continued)

Field descriptions (Sheet 2 of 8)

Field	Subfield or refinement	Entry	Explanation and action
	TRAFSNO	numeric (0 to 127)	*Traffic separation number* Enter the incoming and outgoing traffic separation number assigned to the trunk group. If a traffic separation number is not required, enter 0 (zero). For switches with software package NTX085AA (Traffic Separation Peg Count), enter a value from 1 to the value of office parameter TFAN_OUT_MAX_NUMBER in table OFCENG. For switches without software package NTX085AA, enter a value from 1 to 15. It is recommended that incoming and outgoing traffic separation numbers 1 to 9 be reserved for generic traffic separation numbers. For more information, refer to table TFANINT.
	PADGRP	alphanumeric (1 to 5 characters)	*Pad group* Enter the name of the pad group assigned to the trunk group in table PADDATA. For more information, refer to table PADDATA.
	NCCLS	NCBN NCID NCIM NCIT NCLT NCOF NCON NCOT NCRT NCTC or NOSC	*Operational measurements no-circuit class* Enter the operational measurements (OM) no-circuit class (NCCLS) to indicate which OM register is incremented if treatment GNCT (generalized no circuit) occurs. The initial value for this trunk group type is NCRT (no circuit). For more information, refer to the overview section of table TRKGRP and the *Operational Measurements Reference Manual*.

TRKGRP type T2 (continued)

Field descriptions (Sheet 3 of 8)

Field	Subfield or refinement	Entry	Explanation and action
	TRAFCLS	alphabetic (2 characters)	*Traffic usage class* Enter the traffic usage class assigned to the trunk group. For more information, refer to table TRKGRP.
	SELSEQ	MIDL LIDL CWCTH CCWCTH ASEQ or DSEQ	*Select sequence* If the trunk group direction is two-way (2W) and the far end is a link list switcher, enter LIDL or MIDL (least or most idle) if the far end is MIDL or LIDL respectively. If the trunk group is 2W, the far end is not a link list switcher and sequential selection does not apply, enter MIDL. If the trunk group is 2W, the far end is not a link list switcher, and feature package NTX244AB (Enhanced Sequential Trunk Hunting) is present, base the selection order on the order of the trunks in table TRKMEM, and enter • CWCTH or CCWCTH for clockwise or counterclockwise circular trunk hunting from the most recently released trunk in the trunk group, if the far end is CCWCTH or CWCTH respectively, or • ASEQ or DSEQ for ascending or descending sequential selection, if far end is DSEQ or ASEQ respectively. Entries outside this range are invalid. For more information, refer to table TRKGRP.

TRKGRP type T2 (continued)

Field descriptions (Sheet 4 of 8)

Field	Subfield or refinement	Entry	Explanation and action
			Note: The selection sequence for an existing trunk group can be changed from ASEQ to DSEQ, or from DSEQ to ASEQ, if all the members are made installation busy (INB) or unequipped (UNEQ). The selection method for an existing trunk group cannot be changed. To change the selection method for an existing trunk group from ASEQ or DSEQ to CWCTH or CCWCTH, or to MIDL or LIDL, define a new trunk group, as follows: Create a new trunk group with the required trunk selection method, delete the individual trunks from the old trunk group, and add the trunks to the new trunk group.
	DIGSOUT	numeric (0 to 18)	*Digits outpulsed* If the number of digits to be outpulsed is variable, enter 0 (zero) and specify the number of digits to be outpulsed in the appropriate route list. If the number of digits to be outpulsed is a fixed quantity, enter a value from 0 to 18.
	TOLL	Y or N	*Toll* If the trunk group is outgoing tandem and the connecting office is toll, enter Y (yes). Otherwise, enter N (no).
	PRTNM	alphanumeric (1 to 4 characters)	*Standard pretranslation name* Enter the name of the standard pretranslator datafilled in table STDPRTCT to which translation routes on receipt of the first incoming digit. If no pretranslation is required, enter NPRT (no pretranslator). If office parameter TRK_OOS_CHK_ON in table OFCVAR is set to Y, all trunks in the group must be busy before the value of this field can be changed by data modification order (DMO).

TRKGRP type T2 (continued)

Field descriptions (Sheet 5 of 8)

Field	Subfield or refinement	Entry	Explanation and action
	SCRNCL	alphanumeric (1 to 32 characters) or NSCR	*Class-of-service screening table name* If class-of-service screening is required, enter the name of the class-of-service screening table (datafilled in table SCRNCLAS) to which digit translation routes. If class-of-service screening is not required, enter NSCR (no screening).
	SNPA	numeric (3 digits)	*Serving numbering plan area* Enter the code in table HNPACODE to which translation routes for digit translation. If office parameter TRK_OOS_CHK_ON in table OFCVAR is set to Y, all trunks in the group must be busy before the value of this field can be changed by DMO.
	ORIGSRCE	LCL or NLCL	*Originating source* Enter the originating source of the call, LCL (local) or NLCL (nonlocal). For more information, refer to the “Notes on originating source" section in table HNPACONT.HNPACODE.
	VDEVAR	see subfield	*Variable digit data* This field consists of subfield VDESEL.
	VDESEL	Y or N	*Variable digit selector* If the variable digit format is used for the standard pretranslator, enter Y and datafill refinements DIGSIN1 and DIGSIN2. Otherwise, enter N and datafill refinement DIGREGEN. If office parameter TRK_OOS_CHK_ON in table OFCVAR is set to Y, all trunks in the group must be busy before the value of this field can be changed by DMO.

TRKGRP type T2 (continued)

Field descriptions (Sheet 6 of 8)

Field	Subfield or refinement	Entry	Explanation and action
	DIGSIN1	numeric(1 to 15)	*Minimum number of incoming digits* If the entry in subfield VDESEL is Y, enter the minimum number of incoming digits received on the trunk group. Entries outside the range indicated for this field are not valid. If office parameter TRK_OOS_CHK_ON in table OFCVAR is set to Y, all trunks in the group must be busy before the value of this field can be changed by DMO.
	DIGSIN2	numeric (1 to 15)	*Maximum number of incoming digits* If the entry in subfield VDESEL is Y, enter the maximum number of incoming digits received on the trunk group. Entries outside the range indicated for this field are not valid. If office parameter TRK_OOS_CHK_ON in table OFCVAR is set to Y, all trunks in the group must be busy before the value of this field can be changed by DMO.

TRKGRP type T2 (continued)

Field descriptions (Sheet 7 of 8)

Field	Subfield or refinement	Entry	Explanation and action
	DIGREGEN	numeric (1 to 4 digits) or N	*Digits to be regenerated* If the entry in subfield VDESEL is N, enter the digit string to be prefixed to the incoming digits to regenerate a seven-digit number. The length of the digit string entered is subtracted from seven by the switch to determine the number of incoming digits to expect. The regenerated number is then translated in table STDPRTCT.STDPRT or HNPACONT.HNPACODE, or both. For example, if the entry is 73, the switch expects five incoming digits XXXXX and regenerates the number 73XXXXX. If no digits are to be prefixed, enter N. The switch then expects seven incoming digits. If office parameter TRK_OOS_CHK_ON in table OFCVAR is set to Y, all trunks in the group must be busy before the value of this field can be changed by DMO.
	OPTIONS	see subfield	*Options* Datafill up to three multiples of subfield OPTION and refinements.

TRKGRP type T2 (continued)

Field descriptions (Sheet 8 of 8)

Field	Subfield or refinement	Entry	Explanation and action
	OPTION	BCNAME or CHGNUM	*Option* To specify the bearer-capability-name option, enter BCNAME and datafill refinement BCNAME. To specify the charge-number-delivery option, which sends a charge number and originating line information (OLI) parameter with the initial address message (IAM), enter CHGNUM. No refinements are required for this entry value. If no options apply, leave this field blank.
	BCNAME	alphanumeric (1 to 16 characters)	*Bearer capability name* If the entry in field OPTION is BCNAME, enter the bearer capability to be used by this trunk group. Refer to table BCDEF for the current list of available bearer capabilities. If field OPTION and refinement BCNAME are left blank, the default bearer capability of the central office is used.

Datafill example

The following example shows sample datafill for table TRKGRP type T2. This example has been datafilled in accordance with the following datafill requirements:

- The code in table CLLI for the trunk group is OTWAON11MG02.
- The trunk group type is T2.
- The incoming and outgoing traffic separation number 22 is assigned to the trunk group.
- The name of the pad group assigned to the trunk group is ELO.
- NCRT is the no-circuit class.
- The traffic class is interoffice IE.
- The select sequence for outgoing calls is most idle trunks (MIDL).
- Field DIGSOUT is 0 (zero), indicating that the digits to be deleted are defined in a route list.
- The trunk group is not toll-protected.

- The standard pretranslation table name is INC1.
- No class-of-service screening is required.
- The trunk group is assigned to serving NPA 613.
- The originating source is local (LCL).
- The number of incoming calls is 5 (N), and the digits 72 are prefixed to the incoming digits to reconstruct the dialed number.
- The bearer capability assigned to the trunk group is 56-k data.

MAP display example for table TRKGRP type T2

```
GRPKEY
                                          GRPINFO
_____________________________________________________________________
OTWAO11MG02
        T2 22 ELO NCRT IE MIDL 0 N INC1 +
        NSCR 613 LCL N 72 BCNAME 56KDATA $
```

Table history

NA004

Removed option AIN; table TRKAIN is used instead.

BCS36

Added option AIN.

TRKGRP type TI

Incoming End Office Trunk Group Type

In a DMS office, incoming trunk group type TI connects with an end or toll office for local, direct, or tandem switching.

If the trunk group uses dial pulse signaling and trunk-to-trunk overlap outpulsing, the variable number of digits format is required. The minimum number of digits specified is the number of digits received before overlap outpulsing starts.

Data fill sequence

For trunk group type TI, table TRIGGRP must be datafilled before table TRKGRP.

For additional dependencies, refer to section “Table size" in table TRKGRP.

Datafill

The following table lists the datafill for table TRKGRP type TI.

Field descriptions (Sheet 1 of 5)

Field	Subfield or refinement	Entry	Explanation and action
GRPKEY		see subfield	*Group key* This field consists of subfield CLLI.
	CLLI	alphanumeric (1 to 16 characters)	*Common language location identifie* Enter the common language location identifier (CLLI) code assigned to the trunk group in table CLLI.
GRPINFO		see subfields	*Variable group data* This field consists of subfields GRPTYP, TRAFSNO, PADGRP, NCCLS, TRAFCLS, PRTNM, SCRNCL, SNPA, ORIGSRCE, VDEVAR, and OPTIONS. Refer to section “General field information" in table TRKGRP for information on an alternate structure for this field that results from the datafill of table CUSTFLDS.
	GRPTYP	TI	*Group type* Enter the incoming end office trunk group type TI.

TRKGRP type TI (continued)

Field descriptions (Sheet 2 of 5)

Field	Subfield or refinement	Entry	Explanation and action
	TRAFSNO	numeric (0 to 127)	*Traffic separation number* Enter the incoming traffic separation number assigned to the trunk group. If a traffic separation number is not required, enter 0 (zero). For switches with software package NTX085AA (Traffic Separation Peg Count), enter a value from 1 to the value of office parameter TFAN_OUT_MAX_NUMBER in table OFCENG. For switches without software package NTX085AA, enter a value from 1 to 15. It is recommended that incoming and outgoing traffic separation numbers 1 to 9 be reserved for generic traffic separation numbers. For more information, refer to table TFANINT.
	PADGRP	alphanumeric (1 to 5 characters)	*Pad group* Enter the name of the pad group assigned to the trunk group in table PADDATA.
	NCCLS	NCRT	*Operational measurements no-circuit class* This field is not required for incoming trunk groups. Enter NCRT (no circuit).
	TRAFCLS	alphabetic (2 characters)	*Traffic usage class* Enter the traffic usage class assigned to the trunk group. For more information, refer to table TRKGRP.

TRKGRP type TI (continued)

Field descriptions (Sheet 3 of 5)

Field	Subfield or refinement	Entry	Explanation and action
	PRTNM	alphanumeric (1 to 4 characters) or NPRT	*Standard pretranslation name* Enter the name of the standard pretranslator datafilled in table STDPRTCT to which translation routes on receipt of the first incoming digit. If pretranslation is not required, enter NPRT (no pretranslator). If office parameter TRK_OOS_CHK_ON in table OFCVAR is set to Y (yes), all trunks in the group must be busy before the value of this field can be changed by data modification order (DMO).
	SCRNCL	alphanumeric (1 to 32 characters) or NSCR	*Class of service screening table name* If class-of-service screening is required, enter the name of the class-of-service screening table (datafilled in table SCRNCLAS) to which digit translation routes. If class-of-service screening is not required, enter NSCR (no screening).
	SNPA	numeric (3 digits)	*Serving numbering plan area* Enter the code in table HNPACODE to which translation routes for digit translation. If office parameter TRK_OOS_CHK_ON in table OFCVAR is set to Y, all trunks in the group must be busy before the value of this field can be changed by DMO.
	ORIGSRCE	LCL or NLCL	*Originating source* Enter the originating source LCL (local) or NLCL (nonlocal). For more information, refer to the “Notes on originating source" section in table HNPACONT.HNPACODE.
	VDEVAR	see subfield	*Variable digit data* This field consists of subfield VDESEL.

TRKGRP type TI (continued)

Field descriptions (Sheet 4 of 5)

Field	Subfield or refinement	Entry	Explanation and action
	VDESEL	Y or N	*Variable digit selecto* *r*If the number of incoming digits is variable, enter Y and datafill refinements DIGSIN1 and DIGSIN2. If the number of incoming digits is a fixed quantity, enter N and datafill refinement DIGREGEN. If office parameter TRK_OOS_CHK_ON in table OFCVAR is set to Y, all trunks in the group must be busy before the value of this field can be changed by DMO.
	DIGSIN1	numeric (1 to 18)	*Minimum number of incoming digits* If the entry in field VDESEL is Y, enter the minimum number of incoming digits that can be received on the trunk group. Entries outside the range indicated for this field are not valid. If office parameter TRK_OOS_CHK_ON in table OFCVAR is set to Y (yes), all trunks in the group must be busy before the value of this field can be changed by data modification order (DMO).
	DIGSIN2	numeric (1 to 18)	*Maximum number of incoming digits* If the entry in field VDESEL is Y, enter the maximum number of incoming digits that can be received on the trunk group. Entries outside the range indicated for this field are not valid. If office parameter TRK_OOS_CHK_ON in table OFCVAR is set to Y (yes), all trunks in the group must be busy before the value of this field can be changed by data modification order (DMO).

TRKGRP type TI (continued)

Field descriptions (Sheet 5 of 5)

Field	Subfield or refinement	Entry	Explanation and action
	DIGREGEN	numeric (1 to 4 digits) or N	*Digits to be regenerated* If the entry in field VDESEL is N, enter the digit string (one to four digits) to be prefixed to the incoming digits to regenerate a seven-digit number. The length of the digit string entered is subtracted from seven by the switch to determine the number of incoming digits to expect. The regenerated number is then translated in table STDPRTCT.STDPRT or HNPACONT.HNPACODE, or both. For example, if the entry is 73, the switch expects five incoming digits XXXXX and regenerates the number 73XXXXX. If no digits are to be prefixed, enter N. The switch then expects seven incoming digits.
	OPTIONS	see subfield	*Options* This field consists of up to two multiples of subfield OPTION and refinements.
	OPTION	BCNAME	*Option* To specify the bearer-capability-name option, enter BCNAME and datafill refinement BCNAME. If option BCNAME does not apply, leave this field blank.
	BCNAME	alphanumeric (1 to 16 characters)	*Bearer capability name* If the entry in field OPTION is BCNAME, enter the bearer capability to be used by this trunk group. Refer to table BCDEF for the current list of available bearer capabilities. If field OPTION and refinement BCNAME are left blank, the default bearer capability of the central office is used.

Datafill example

The following example shows sample datafill for table TRKGRP type TI.

The first tuple shows the following information:

- An incoming end office trunk group that has a fixed number of incoming digits.
- The code in table CLLI for the trunk group is OTWAON2303T1.
- The trunk group type is TI.
- The incoming traffic separation number 20 is assigned to the trunk group. ELO is the name of the pad group assigned to the trunk group.
- NCRT is the no-circuit class.
- The traffic class is interoffice (IE).
- The standard pretranslator subtable name is INC31.
- No class-of-service screening is required.
- The trunk group is assigned to serving NPA 613.
- The originating source is nonlocal (NLCL).
- The number of incoming digits is 5 and the digits 72 are prefixed to the incoming digits to reconstruct the number dialed. The bearer capability is 56k data.

The second tuple shows the following information:

- An incoming end office trunk group that has a variable number of incoming digits.
- The code in table CLLI for the trunk group is OTWAONllMG01.
- The trunk group type is TI.
- The incoming traffic separation number 21 is assigned to the trunk group.
- ELO is the name of the pad group assigned to the trunk group.
- NCRT is the no-circuit class.
- The traffic class is interoffice (IE).
- The standard pretranslator subtable name is INC2.
- No class-of-service screening is required.
- The trunk group is assigned to serving numbering plan area 613.
- The originating source is local (LCL).
- The number of incoming digits is variable, the minimum number of digits is 3 and the maximum number of digits is 7.
- The bearer capability is 56-k data.

TRKGRP type TI (end)

MAP display example for table TRKGRP type TI

```
GRPKEY
                                                    GRPINFO
_____________________________________________________________
OTWAON230T1
   T1 20 ELO NCRT IE INC3 NSCR 613 NLCL N 72
   BCNAME 56KDATA $
OTWAON11MG01
   T1 21 ELO NCRT IE INC2 NSCR 613 LCL Y 3 7
   BCNAME 56KDATA $
```

Table history

NA004

Removed option AIN; table TRKAIN is used instead.

BCS36

Added option AIN.

TRKGRP type TL

CCIS Transmission Link Trunk Group Type

Two-way trunk group type TL is used to connect a DMS office using common channel interoffice signaling (CCIS) with other offices using CCIS, to transmit and receive signals between the two offices.

Since trunk group type TL does not support call processing functions, the table does not have any fields pertaining to connecting numbering plan area (NPA), standard pretranslator, class of service screening, or serving NPA.

Datafill

The following table lists the datafill for table TRKGRP type TL.

Field descriptions (Sheet 1 of 2)

Field	Subfield or refinement	Entry	Explanation and action
GRPKEY		see subfield	*Group key* This field consists of subfield CLLI.
	CLLI	alphanumeric (1 to 16 characters)	Common language location identifier Enter the common language location identifier (CLLI) code assigned to the trunk group in table CLLI.
GRPINFO		see subfields	*Variable group data* This field consists of subfields GRPTYP, TRAFSNO, PADGRP, and NCCLS. Refer to section “General field information" in table TRKGRP for information concerning an alternate structure for this field that results from the datafill of table CUSTFLDS.
	GRPTYP	TL	*Group type* Enter TL to specify the group type for transmission link trunks.
	TRAFSNO	numeric (0)	*Traffic separation number* A traffic separation number is not required. Enter 0 (zero).

TRKGRP type TL (end)

Field descriptions (Sheet 2 of 2)

Field	Subfield or refinement	Entry	Explanation and action
	PADGRP	NPDGP	*Pad group* Enter NPDGP to specify that no pad group is required for this trunk group type. For more information, refer to table PADDATA.
	NCCLS	NCRT	*Operational measurements no-circuit class* This field contains the operational measurements (OM) no-circuit class (NCCLS) that indicates which OM register is incremented if treatment GNCT (generalized no circuit) occurs. Enter NCRT (no circuit). For more information, refer to table TRKGRP and the *Operational Measurements Reference Manual*.

Datafill example

The following example shows sample datafill for table TRKGRP type TL. This example shows a signaling link (ORLDFLMA03T6) and its two dedicated voice frequency links, VFL000ORLD and VFL001ORLD.

MAP display example for table TRKGRP type TL

```
GRPKEY        GRPINFO
_____________________________________________________
ORLDFLMA03T6      TL 0 NPDGRP NCRT
VFL000ORLD        TL 0 NPDGRP NCRT
VFL001ORLD       TL 0 NPDGRP NCRT
```

TRKGRP type TO

Outgoing End Office Trunk Group Type

The outgoing end office trunk group type TO in a DMS office interfaces with toll office for local traffic, direct or tandem.

Datafill

The following table lists the datafill for table TRKGRP type TO.

Field descriptions (Sheet 1 of 4)

Field	Subfield or refinement	Entry	Explanation and action
GRPKEY		see subfield	*Group key* This field consists of subfield CLLI.
	CLLI	alphanumeric (1 to 16 characters)	*Common language location identifier* Enter the code assigned to the trunk group in table CLLI.
GRPINFO		see subfields	*Variable group data* This field consists of subfields GRPTYP, TRAFSNO, PADGRP, NCCLS, TRAFCLS, SELSEQ, DIGSOUT, and TOLL.
	GRPTYP	TO	*Group type* Enter the outgoing end office trunk group type TO.
	TRAFSNO	0 to 127	*Traffic separation number* Enter the incoming and outgoing traffic separation number assigned to the trunk group. If a traffic separation number is not required, enter 0 (zero). For switches with software package NTX085AA (Traffic Separation Peg Count), enter a value from 1 to the value of office parameter TFAN_OUT_MAX_NUMBER in table OFCENG. For switches without software package NTX085AA, enter a value from 1 to 15. Incoming and outgoing traffic separation numbers 1 to 9 should be reserved for generic traffic separation numbers. For more information, refer to table TFANINT.

TRKGRP type TO (continued)

Field descriptions (Sheet 2 of 4)

Field	Subfield or refinement	Entry	Explanation and action
	PADGRP	alphanumeric (1 to 5 characters)	*Pad group* Enter the name of the pad group assigned to the trunk group in table PADDATA. For more information, refer to table PADDATA.
	NCCLS	NCBN NCID NCIM NCIT NCLT NCOF NCON NCOT NCRT NCTC or NOSC	*Operational measurements no-circuit class* Enter the operational measurements (OM) no-circuit class (NCCLS) to indicate which OM register is incremented if treatment GNCT (generalized no circuit) occurs. If the trunk group direction is incoming, this field is not required. Enter NCRT (no circuit). For more information, refer to table TRKGRP and the *Operational Measurements Reference Manual*.
	TRAFCLS	alphabetic (2 characters)	*Traffic usage class* Enter the traffic usage class assigned to the trunk group. For more information, refer to table TRKGRP.

TRKGRP type TO (continued)

Field descriptions (Sheet 3 of 4)

Field	Subfield or refinement	Entry	Explanation and action
	SELSEQ	ASEQ CCWCTH CWCTH DSEQ LIDL or MIDL	*Select sequence* If the trunk group direction is outgoing (OG) or two-way (2W) and the far end is a link list switcher, enter LIDL or MIDL (least or most idle) if the far end is MIDL or LIDL respectively. If the trunk group direction is outgoing or two-way, the far end is not a link list switcher, and sequential selection does not apply, enter MIDL. If the trunk group is outgoing or two-way, the far end is not a link list switcher, and feature package NTX244AB (Enhanced Sequential Trunk Hunting) is present, base the selection order on the order of the trunks in table TRKMEM, and enter • CWCTH or CCWCTH for clockwise or counterclockwise circular trunk hunting from the most recently released trunk in the trunk group, if the far end is CCWCTH or CWCTH respectively, or • ASEQ or DSEQ for ascending or descending sequential selection, if far end is DSEQ or ASEQ respectively. If the trunk group direction is incoming, sequential selection does not apply. Enter MIDL. Entries outside this range are not valid. For more information, refer to table TRKGRP.

TRKGRP type TO (continued)

Field descriptions (Sheet 4 of 4)

Field	Subfield or refinement	Entry	Explanation and action
	DIGSOUT	0 to 15	*Digits outpulsed* If the number of digits outpulsed is a fixed quantity, enter the number of digits to be outpulsed. If the number of digits to be outpulsed is variable, enter 0 (zero), and specify the number of digits to be outpulsed in the appropriate route list. If software is not available for this feature, enter 0 (zero) and specify the number of digits to be deleted in the appropriate route list. If parameter TRK_OOS_CHK_ON in table OFCVAR is set to Y (Yes), it is required that all trunks in the group have to be busied out before changing the value of this field by the data modification order.
	TOLL	Y or N	*Toll* If the trunk group is outgoing tandem and the connecting office is toll, enter Y (yes). Otherwise, enter N (N). Trunk groups are classified as toll route calls if the toll essential line feature is activated.
	OPTIONS	see subfield	*Options* This field consists of subfield OPTION.
	OPTION	CHGNUM	*Option* Subfield OPTION can hold up to nine entries. Only the CHGMUM entry is available at this time. To specify the charge-number-delivery option, which sends a charge number and originating line information (OLI) parameter with the initial address message (IAM), enter CHGNUM. No refinements are required for this entry value.

Datafill example

The following example shows sample datafill for table TRKGRP type TO. The code in the table CLLI for the trunk group is OTWAON11MG00.

- The trunk group type is TO.
- The outgoing traffic separation number 25 is assigned to the trunk group.
- ELO is the name of the pad group assigned to the trunk group.
- NCRT is the no-circuit class.
- The traffic class is interoffice IE.
- MIDL is the selection sequence.
- Field DIGSOUT is 0 (zero), digits deleted are defined in the route list.
- The trunk group is not toll protected.

MAP display example for table TRKGRP type TO

```
GRPKEY                                                    GRPINFO
_____________________________________________________________________

OTWAON11MG00
                TO  25   ELO NCRT    IE    MIDL  0 N    $
```

TRKGRP type TOPS

TOPS Trunk Group Type

Table TRKGRP group type TOPS is provided with the Traffic Operator Position System (TOPS) package.

This group type is required in a toll office with a TOPS DMS-200 switching unit or in a combined local/toll office with a TOPS DMS-100/200 switching unit. TOPS is necessary for incoming traffic that requires one of the following actions:

- TOPS operator intervention
- recording on the CAMA tape
- both TOPS operator intervention and recording on the CAMA tape

If trunk group type TOPS is two way, the outgoing traffic is Toll Completing.

Directory assistance (DA) calls originate on TOPS trunks and route to Auxiliary Operator Services System (AOSS) positions. Operating companies can route calls through a pretranslator (table STDPRTCT), provided for the trunk group, or map the called numbering plan area (NPA) against a route for the serving NPA (SNPA) of the trunk group in table HNPACONT. The pretranslator name (which appears in table TRKGRP under field PRTNM) and the subtable name must be the same.

Only TOPS trunks that carry digits outpulsed from the originating office to the TOPS office are capable of originating an AOSS call such as, COMBINED, HOTEL, COIN, NOCOIN, CAMATRIB, and DNLOOKUP.

Intercept calls, routed over TOPS trunks which provide ANI spill, can be recognized by the multifrequency (MF) automatic number identification (ANI) ID digit. The value of the ID digit corresponding to an intercept call is defined through table BELLCAT, which also provides the route to AOSS for trunks handling intercept calls.

Table OPRTRANS can be used for the translation of intra-LATA (local access and transport area) 800 calls originated on TOPS trunks.

In the case of Enhanced 800 (E800) service, if the routing number is returned from the service control point (SCP), the carrier identifier in the routing number is checked against the office parameter SSP_NSC_CARRIER_ID in table OFCENG. If the carrier identifier and the office parameter match, the call is translated as an intra-LATA call. Forintra-LATA calls, retranslation starts at table OPRTRANS and then translates to table STDPRTCT.

In the case of 800 Plus and 800 Plus southbound calls originated on TOPS trunks, retranslation starts at table OPRTRANS.

When datafilled for group type TOPS, table TRKGRP interacts with the following office parameters:

- TFAN_IN_MAX_NUMBER in table OFCENG
- TFAN_OUT_MAX_NUMBER in table OFCENG
- TRK_OOS_CHK_ON in table OFCVAR

For additional information that relates to group type TOPS, refer to table TOPEATRK.

Datafill

The following table lists the datafill for table TRKGRP type TOPS.

Field descriptions (Sheet 1 of 16)

Field	Subfield or refinement	Entry	Explanation and action
GRPKEY		see subfield	*Group key* This field consists of subfield CLLI.
	CLLI	alphanumeric (1 to 16 characters)	*Common language location identifier* Enter the common language location identifier (CLLI) code assigned to the trunk group in table CLLI.
GRPINFO		see subfields	*Variable group data* This field consists of subfields GRPTYP, TRAFSNO, PADGRP, NCCLS, DIR SELSEQ, SNPA, PRTNM, LCANAME, SCRNCL, OHNXXSCR, TRAFCLS, STATCLAS, TIMEOUT, NPANXXRQ, DISPLAY, NBECCODE, CONNINFO, SIGINFO, BYPASUTR, ISDNAREA, and OPTIONS. Refer to section “General field information" in table TRKGRP for information on an alternate structure for this field that results from the datafill of table CUSTFLDS.
	GRPTYP	TOPS	*Group type* Enter TOPS to specify the trunk group type for traffic operator position systems.

TRKGRP type TOPS (continued)

Field descriptions (Sheet 2 of 16)

Field	Subfield or refinement	Entry	Explanation and action
	TRAFSNO	numeric (0 to 127)	*Traffic separation number* Enter the incoming and outgoing traffic separation number assigned to the trunk group. If a traffic separation number is not required, enter 0 (zero). For switches with software package NTX085AA (Traffic Separation Peg Count), enter a value from 1 to the value of office parameter TFAN_OUT_MAX_NUMBER or TFAN_OUT_MAX_NUMBER (whichever is lower) in table OFCENG. For switches without software package NTX085AA, enter a value from 1 to 15. Incoming and outgoing traffic separation numbers 1 to 9 should be reserved for generic traffic separation numbers. For more information, refer to table TFANINT.
	PADGRP	alphanumeric (1 to 5 characters)	*Pad group* Enter the name of the pad group assigned to the trunk group in table PADDATA. For more information, refer to table PADDATA.
	NCCLS	NCRT	*Operational measurements no-circuit class* This field is not required for TOPS trunk groups, enter NCRT.
	DIR	IC or 2W	*Direction* Enter IC to specify that the traffic flow is incoming, or 2W to specify that the traffic flow is two-way. The MAP display also shows OG (outgoing), but that is not valid for TOPS trunks.

TRKGRP type TOPS (continued)

Field descriptions (Sheet 3 of 16)

Field	Subfield or refinement	Entry	Explanation and action
	SELSEQ	MIDL, LIDL CWCTH, CCWCTH, ASEQ, or DSEQ	*Select sequence* If the trunk group direction is two-way (2W) and the far end is a link list switcher, enter LIDL or MIDL (least or most idle) if the far end is MIDL or LIDL respectively. If the trunk group direction is two-way, the far end is not a link list switcher and sequential selection does not apply, enter MIDL. If the trunk group direction is incoming (IC), sequential selection does not apply. Enter MIDL. If the trunk group is two-way, the far end is not a link list switcher, and feature package NTX244AB (Enhanced Sequential Trunk Hunting) is present, base the selection order on the order of the trunks in table TRKMEM, and enter • CWCTH or CCWCTH for clockwise or counterclockwise circular trunk hunting from the most recently released trunk in the trunk group, if the far end is CCWCTH or CWCTH respectively, or • ASEQ or DSEQ for ascending or descending sequential selection, if far end is DSEQ or ASEQ respectively. Entries outside this range are valid.

TRKGRP type TOPS (continued)

Field descriptions (Sheet 4 of 16)

Field	Subfield or refinement	Entry	Explanation and action
			Value WIDEBAND appears on the MAP display, but is used in an IBN rather that a TOPS environment. Refer to table TRKGRP type IBNTO for further information. ***Note:*** A trunk group trunk selection method cannot be changed. If a change in the selection method is required, a new trunk group must be created with the required trunk selection method. The individual trunks with the old selection sequence must be deleted from the old trunk group and then added to the new trunk group. For an existing trunk group, the selection sequence may be changed to ASEQ from DSEQ or from DSEQ to ASEQ if all the trunk members are installation busy (INB) or unequipped (UNEQ). Refer to section “General field information" in table TRKGRP for additional information concerning field SELSEQ.
	SNPA	3 digits from HNPACONT or SNPANAME	*Serving NPA* Enter the serving NPA code for the trunk group. This code is used only to expand a 7-digit calling DN to a 10-digit calling number. The entry must be previously defined in either table HNPACONT or SNPANAME as applicable. If office parameter TRK_OOS_CHK_ON in table OFCVAR is set to Y, all trunks in the group must be busy before the value of this field can be changed by data modification order (DMO).
	STS	3 digits from HNPACONT or SNPANAME	Serving translation scheme. This field is used to index the TOPS base translations and screening tables. The entry must be previously defined in either table HNPACONT or SNPANAME.

Field descriptions (Sheet 5 of 16)

Field	Subfield or refinement	Entry	Explanation and action
.	PRTNM	alphanumeric (1 to 4 characters) or NPRT	*Standard pretranslator name* If standard pretranslation is required, enter the name of the standard pretranslator defined in table STDPRTCT to which digit translation is to route after the receipt of the first digit. If pretranslation is not required, enter NPRT (no pretranslation). If office parameter TRK_OOS_CHK_ON in table OFCVAR is set to Y (yes), all trunks in the group must be busy before the value of this field can be changed by DMO.
	LCANAME	alphanumeric (1 to 4 characters) or NLCA	*Local calling area screening table name* If all incoming calls on this trunk group require the same local calling area screening, enter the name of the local calling area screening subtable. The entry must be datafilled in table LCASCRCN. Enter NLCA in this field if one of the following conditions is true: • Traffic on this trunk group is from different sources that require different local calling area screening. Field LCANAME is specified in table TOPSBC for each BILLCODE associated with this trunk group CLLI. • No local calling area screening is required. ***Note:*** If an LCANAME other than NLCA is entered in both table TRKGRP and table TOPSBC, switch CPU capacity will be wasted due to the local calling screening test being performed twice.

TRKGRP type TOPS (continued)

Field descriptions (Sheet 6 of 16)

Field	Subfield or refinement	Entry	Explanation and action
	SCRNCL	alphanumeric (1 to 32 characters)or NSCR	*Class-of-service screening table name* Enter a class of service screening subtable name if all calls incoming on this trunk group require the same class of service screening. The entry must be datafilled in table SCRNCLAS. Enter NSCR (no screening) in this field if one of the following conditions is true: • Traffic on this trunk group is from different sources that require different classes of service screening. The applicable field SCRNCL value is then specified in table TOPSBC for each field BILLCODE entry associated with the trunk group CLLI. • No class of service screening is required. ***Note:*** If a SCRNCL other than NSCR is entered in both table TRKGRP and table TOPSBC, switch CPU capability is wasted due to the local calling screening test being performed twice.
	OHNXXSCR	Y or N	*NXX screening for operator-handled calls* Enter Y (yes) if NXX code screening is required on operator handled calls. Otherwise enter N (no). ***Note:*** For trunk groups of type TOPS, field OHNXXSCR must be set to N if the value in field SIGTYPE is DANI.
	TRAFCLS	CA or SP	*Traffic usage class* Enter the traffic usage class assigned to the trunk group. Refer to section “General field information" in table TRKGRP for more information.
	STATCLAS		*Station class* Enter the station class of the trunk group. This field identifies the station type from which the traffic is coming.

Field descriptions (Sheet 7 of 16)

Field	Subfield or refinement	Entry	Explanation and action
		ALARM	Dedicated alarm: a station class for traffic from end offices indicating alarm conditions only. The TOPS position screen display includes ALM.
		APS	Attended pay station: a station class for traffic from an attended pay station.
		CAMA	Centralized automatic message accounting: a station class dedicated to 1+, direct-dialed, non-operator traffic from coin, non-coin, and hotel stations.
		CAMATRIB	Combined ONI only: a station class for traffic from noncoin, coin, and hotel station types from end offices with Operator Number Identification (ONI) only (no automatic number identification [ANI]). Station class is assumed to be noncoin until a verbal or auditory response (zip tone for coin) indicates otherwise. The TOPS position screen display includes one of the codes that apply to a noncoin station.
		COIN	Dedicated coin: a station class for traffic from coin stations only. The TOPS position screen display includes COIN (see note). ***Note:*** Coin stations are post-pay (display includes COIN PO) if the value in table TRKSGRP coin control field CCONT is NO. Otherwise coin stations are pre-pay (display includes COIN PRE).
		COMBINED	Combined: a station class for traffic from noncoin, coin (see note concerning coin stations), and hotel station types. DMS uses the TOPS or TSPS pulsing format signals (ST2P, ST3P ST, STP) and the ID digit to determine whether a TOPS position is required (for example, 1+ noncoin with ANI goes on AMA tape without operator intervention). The display on the selected TOPS position screen informs the operator about the kind of call.
		DA	Directory assistance: a station class dedicated to local 411 calls for the served NPA.

TRKGRP type TOPS (continued)

Field descriptions (Sheet 8 of 16)

Field	Subfield or refinement	Entry	Explanation and action
		DNLOOKUP	Class-of-service lookup: a station class for traffic from an end office that is unable to provide zip tones and which does not have full ANI service capability. Table SPLDNID is searched, after the operator enters the calling number, to determine the calling station type.
		HOTEL	Dedicated hotel: a station class for traffic from hotel stations only. The TOPS position screen display includes HOTEL.
		INTCPT	Dedicated intercept: a station class for traffic from end office detected intercepts only. The TOPS position screen display includes INTC.
		MOBILE	Dedicated mobile: a station class for traffic from mobile stations only. The TOPS position screen display can be specified in table TOPS.
		NONCOIN	Dedicated noncoin: a station class for traffic from noncoin stations only. The TOPS position screen display includes one of the codes that apply to a noncoin station.

TRKGRP type TOPS (continued)

Field descriptions (Sheet 9 of 16)

Field	Subfield or refinement	Entry	Explanation and action
		NCSCREEN	Non-coin screen: supports non-coin traffic from end offices (for example, some older ones) that are not capable of sending combined start signals, but are capable of supporting the full range of ANI ID digit(s). Table BELLCAT or OSSCAT is used to map the ANI ID digit(s) to an initial calling station class. For NCSCREEN, ANI screening is available for signalling types BELL, MODBELL and OSS. ANI screening is not provided for signalling types ONI, DANI, EAOSS, EAOSSIC, AIS, EAFGD, COMFGD, OPENNUM, and R2 when the station class is NCSCREEN. Table control prevents datafilling field STATCLAS with station class NCSCREEN for these signalling types. Combined start signals are not supported. They are only used to indicate either direct dialed (ST or ST2P) or operator assisted (STP or ST3P). The start signals are not used to determine between coin and non-coin station classes. NCSCREEN can be used by the service analysis system to monitor TOPS traffic.
		OIC	Office identification code: a station class that carries a combination of DA call types (for example, 411, 555-1212, intercept, etc.). If more than one type of traffic is carried on a single TOPS trunk, a special signaling protocol is used to transmit details about the call from the originating office using the MF ANI ID digit. The ID digit is definable by the operating company in table BELLCAT. For further information on these classes, refer to table TOPS to the descriptions of call origination types. Note that machine-type intercept cannot be sent over OIC trunks.

TRKGRP type TOPS (continued)

Field descriptions (Sheet 10 of 16)

Field	Subfield or refinement	Entry	Explanation and action
		RESTBIL	Restricted billing class: a station class for traffic from noncoin, coin, and hotel station types requiring selective billing for originating classes entered in table RESTBIL after being screened by table SPLDNID.
		TOLLSTA	Dedicated toll station: a station class for traffic from toll stations only. The TOPS position screen display includes TS.
		TOLLSUB	Toll subscriber: a station class for traffic from a toll subscriber.
	TIMEOUT	Y or N	*Timeout* The entry in this field specifies whether a timeout is required to detect zero minus (0-) calls when 0- is indicated by absence of digits following trunk seizure. Enter N to indicate that a timeout is not required. This applies in the following cases: • Trunk group is multifrequency (MF); the absence of digits following seizure is recognized as soon as the ST signal is received. • Trunk group is no pulsing (NP) and dedicated to 0- calls. • Trunk group does not carry 0- calls that are indicated by the absence of digits following seizure. Enter Y to indicate that a timeout is required, indicated by the absence of digits following seizure, on a DP trunk group. The length of the timeout interval is specified in field PSPDSEIZ of table TRKSGRP. The trunk group carries a mix of call types (1±, 0±, 0-). ***Note:*** Trunk group type TOPS can only have one type of pulsing (MF, DP, or NP) for all its trunk members. The incoming type of pulsing is specified in field IPULSTYP of table TRKSGRP.

Field descriptions (Sheet 11 of 16)

Field	Subfield or refinement	Entry	Explanation and action
	NPANXXRQ	Y or N	*Display originating NPANXX to operator* Enter Y if the NPANXX of the originating trunk group is displayed to the operator at call arrival. The format of the display is as follows: • ANI SUCCESS - NPA NXX XXXX of the calling number • ANI FAIL - NPANXX obtained from first entry for the trunk group in table TOPSBC • ONI - NPANXX obtained as for ANI FAIL above ***Note:*** Trunk group type TOPS can only have one type of pulsing (MF, DP, or NP) for all its trunk members. The incoming type of pulsing is specified in field IPULSTYP of table TRKSGRP.
	DISPLAY	numeric (0 to 254)	*Instructional display to operator* Enter the index into table TOPSDISP that specifies the special instructions to display to the operator on a trunk group basis.
	NBECCODE	numeric (0000 to 9999)	*Non-Bell exchange company code* Enter the non-Bell exchange company (NBEC) code. Each NBEC (where operator services are provided) is normally assigned a unique code by the operating company in the range of 1000 to 9999, although the range of the field allows for all four-digit codes. The NBEC code can be changed in table TRKGRP for those TOPS trunk groups coming from NBECs. The default NBEC code is 0000, which indicates the operating company. This default is used if the datafill in table NBECCODE is not present or if the call is ANI fail of ONI.
	CONNINFO	see subfield	*Connection information.* This field consists of subfield CONNTYPE and refinements.

TRKGRP type TOPS (continued)

Field descriptions (Sheet 12 of 16)

Field	Subfield or refinement	Entry	Explanation and action
	CONNTYPE	TYPE_A, TYPE_B, TYPE_D, CELL_ MOBILE, LOCAL_ TRANS or NONE	*Connection type* This subfield is used in AMA module 150, table 168, bytes 1-2. If CONNTYPE=NONE, module 150 is not recorded for calls on this trunk group. These entries are defined in Bellcore standards. The AMA values recorded are as follows: • 01 = TYPE_A • 02 = TYPE_B • 03 = TYPE_D • 04 = Cellular mobile • 05 = Local transport
	CARTYPE	NBEC or IEC	*Carrier type* This field points to the carrier code for AMA module 150, table 168, bytes 4-7. If CARTYPE=IEC, the carrier code is from table TOPEATRK. If CARTYPE=NBEC, the NBEC code is from table NBECODE if the calling number has an entry. Otherwise, field NBECID of table TRKGRP is used. Field CARTYPE is visible only if subfield CONNTYPE does not equal NONE. Field CARTYPE also determines ADACC screening. If CARTYPE=NBEC, the trunk is treated as an NBEC. Or, if CARTYPE=IEC, the trunk is treated as an IEC.
	SIGINFO	see subfields	*Signalling information* This field consists of subfield SIGTYPE and refinements.

Field descriptions (Sheet 13 of 16)

Field	Subfield or refinement	Entry	Explanation and action
	SIGTYPE	AIS, BELL, COMFGD, DANI, EAFGD, EAOSS, EAOSSIC, GOSS7, MODBELL, NILSIGTYPE ONI, OPENNUM, OSS, or R2	*Signalling* AIS: If field STATCLAS is set to INTCPT, enter AIS and datafill refinements BILLCD, ANISEIZ, ANIPDIAL, and TRTMTSUP. BELL: If the trunk group carries ANI and possible ONI traffic using standard Bell signaling format, enter BELL and datafill refinements BILLCD, ANISEIZ, ANIPDIAL, TRTMTSUP, STNOWAIT, and ANIREQ. COMFGD: If the trunk group uses combined equal access feature group D signaling only, or to connect cellular and interexchange carriers to TOPS for ADACC, enter COMFGD and datafill refinements BILLCD, ANISEIZ, ANIPDIAL, TRTMTSUP, ONLNRATE, COINPD, NXXVER. and OPRHOLD. ***Note:*** Parameter POST_WINK_PRE_OFFHOOK_DELAY in table TOPSPARM applies to TOPS trunks with COMFGD signaling.

TRKGRP type TOPS (continued)

Field descriptions (Sheet 14 of 16)

Field	Subfield or refinement	Entry	Explanation and action
			DANI: If the trunk group carries traffic from one directory number, enter DANI and datafill refinement LDN. ***Note:*** For trunk groups with a trunk type of TOPS, field OHNXXSCR must be set to N if the value in field SIGTYPE is DANI. If an attempt is made to datafill a TOPS trunk with SIGTYPE of DANI and OHNXXSCR set to Y, the following error message is output: OHNXXSCR MUST BE N WHEN SIGTYPE = DANI EAFGD: If the trunk group uses equal access feature group D signaled traffic only, enter EAFGD and datafill refinements BILLCD, ANISEIZ, ANIPDIAL, and TRTMTSUP. EAOSS: If the trunk group is COMBINED and calls are any combination of 0±, 0-, or 1± calls, enter EAOSS (for equal access operator services signaling) and datafill refinements BILLCD, ANISEIZ, ANIPDIAL, TRTMTSUP, ANIREQ, DCNVFROM, DCNVTO, INCVFROM, ICNVTO, and FOURWINK. EAOSSIC: To verify the CAC or PIC for two- and three-stage outpulsing calls between an EAEO and an AT, enter EAOSSIC and datafill refinements BILLCD, ANISEIZ, ANIPDIAL, and TRTMTSUP.

TRKGRP type TOPS (continued)

Field descriptions (Sheet 15 of 16)

Field	Subfield or refinement	Entry	Explanation and action
			GOSS7: For global operator signaling system #7 protocol, enter GOSS7 and datafill refinements XLASYS, XLANAME, ONITRMT, HOLDREQ, G7SETNO, and STDIGIT. GOSS7 is only valid in a global environment. GOSS7 uses open numbering, also referred to as universal translations. Universal translations does not use the following fields (but they must be datafilled): SNPA, PRTNM, LCANAME, SCRNCL, OHNXXSCR, TIMEOUT, and NPANXXRQ. MODBELL: If a trunk group uses modified Bell signaling with dial pulsing (DP) and the TOPS software can interpret the start signal in the ANI spill for the ANI failure calls carried on that trunk, enter MODBELL and datafill refinements BILLCD, ANISEIZ, ANIPDIAL, TRTMTSUP, and ANIREQ. NILSIGTYPE: If no signalling type, enter NILSIGTYPE, and no further refinements are required. ONI: If the trunk group carries ONI traffic only, enter ONI and datafill refinements BILLCD, TONEREPT, and TRWKTIME. OPENNUM: If the trunk group uses variable length calling and called digit stream collection for the open numbering plan, enter OPENNUM and datafill refinements ANISEIZ, ANIPDIAL, TRTMTSUP, and ANIREQ. Note, effective TOPS07, this value is only supported in the TOPS Global environment where TOPSPARM parameter DEFAULT_PRODUCT = GLOBAL.

TRKGRP type TOPS (continued)

Field descriptions (Sheet 16 of 16)

Field	Subfield or refinement	Entry	Explanation and action
			OSS: If the trunk group uses the operator services signaling format, enter OSS and datafill refinements BILLCD, ANISEIZ, ANIPDIAL, TRTMTSUP, and ANIREQ. R2: If the trunk group uses R2 signalling, enter R2 and datafill refinements XLASYS, XLANAME, ANIREQ, and ANIFAIL. These fields apply to incoming, outgoing, and 2-way trunks. For more information, refer to functionality R2 on TOPS, GOS00001. Note, effective TOPS07, this value is only supported in the TOPS Global environment where TOPSPARM parameter DEFAULT_PRODUCT = GLOBAL.

SIGTYPE = AIS

If the value in field SIGTYPE is AIS, datafill refinements BILLCD, ANISEIZ, ANIPDIAL, and TRTMTSUP as described below.

Field descriptions for conditional datafill (Sheet 1 of 3)

Field	Subfield or refinement	Entry	Explanation and action
	BILLCD	see subfield	Billing code. This field consists of subfield BCTYPE and refinements.
	BCTYPE	TOPSBC or ENHBC	Billing code type. This subfield indicates the TOPS billing code method for this trunk group. The values are the following: • TOPSBC - The earlier TOPS billing code method, which is the following: — For 7 to 10 digit expansion of the calling number, the SNPA is taken from table TOPSBC field ACTUALBC (first 3 digits). Also, the NXX in ACTUALBC overwrites the NXX of the 7 digit DN. — For 7 to 10 digit expansion of operator and delay calls, the SNPA is taken from table TOPSPARM, parameters OPR_SPECIFIED_SNPA and DELAY_SPECIFIED_SNPA. — For calling number verification, the NXX is checked in table TOPSBC, field BILLCODE. — For ONI and ANIF calls, the default NPA-NXX is displayed to the operator, taken from TOPBC field ACTUALBC in the first tuple for the trunk group. — For class charge, table TOPSBC field CHGCLSS is used to index table TOPSENTC. For value TOPSBC in this field, enter data in refinement NUMBC.

TRKGRP type TOPS (continued)

Field descriptions for conditional datafill (Sheet 2 of 3)

Field	Subfield or refinement	Entry	Explanation and action
			Billing code type (continued). • ENHBC - The enhanced TOPS billing code method, which is as follows: — For 7 to 10 digit expansion of the calling number, the SNPA is taken from table TRKGRP or TCLG7DIG (if trunk is present). Table TCLG7DIG does not overwrite the NXX of the calling number.0 — For 7 to 10 digit expansion of operator and delay calls, the SNPA is taken from table TOPSPARM, parameters OPR_SPECIFIED_SNPA and DELAY_SPECIFIED_SNPA. — For calling number verification, if subfield CLGVER = Y, the NXX is checked in table TCLGVER. Tthis verification is preformed after 7 to 10 digit expansion. — For ONI and ANIF calls, the NPA-NXX displayed to the operator is taken from table TRKGRP field DISPDIGS. — For class charge, value TOPS is always used to index table TOPSENTC. For value ENHBC in this field, enter data in refinements CLGVER and DISPDIGS.
	CLGVER	Y or N	Calling number verification. Enter data in this field if field BCTYPE = ENHBC. Enter Y to verify the calling NPA-NXX in table TCLGVER. Otherwise, enter N for no verification. For N, table TCLGVER is not accessed and all calling numbers are accepted.
	DISPDIGS	6 digits	Display digits. Enter data in this field if field BCTYPE = ENHBC. Enter the NPA-NXX for display to the operator for ONI and ANIF calls.

Field descriptions for conditional datafill (Sheet 3 of 3)

Field	Subfield or refinement	Entry	Explanation and action
	NUMBC	1 to 999	Number of billing codes. Enter data in this field if field BCTYPE = TOPSBC. Enter the number of billing codes (NXXs allocated to originate traffic on this trunk group) plus spares that are reserved in table TOPSBC. This field replaces field NOBILLCD. The MAP display indicates the range is 0-999; however, the system does not allow 0.
	ANISEIZ	numeric (2 to 30)	*ANI seizure timing* Enter the number of seconds that the trunk has to wait for reception of first digits of the ANI spill.
	ANIPDIAL	numeric (2 to 30)	*ANI partial dial timing* Enter the number of seconds that the trunk has to wait for reception of each ANI signal or digit but the first.
	TRTMTSUP	Y or N	*Treatment supervision* Enter Y to indicate that off-hook wink is returned for treatment cases or N to indicate on-hook is maintained.

TRKGRP type TOPS (continued)

SIGTYPE = BELL

If the value in field SIGTYPE is BELL, datafill refinements BILLCD, ANISEIZ, ANIPDIAL, TRTMTSUP, STNOWAIT, and ANIREQ as described below.

Field descriptions for conditional datafill (Sheet 1 of 3)

Field	Subfield or refinement	Entry	Explanation and action
	BILLCD	see subfield	Billing code. This field consists of subfield BCTYPE and refinements.
	BCTYPE	TOPSBC or ENHBC	Billing code type. This subfield indicates the TOPS billing code method for this trunk group. The values are the following: • TOPSBC - The earlier TOPS billing code method, which is the following: — For 7 to 10 digit expansion of the calling number, the SNPA is taken from table TOPSBC field ACTUALBC (first 3 digits). Also, the NXX in ACTUALBC overwrites the NXX of the 7 digit DN. — For 7 to 10 digit expansion of operator and delay calls, the SNPA is taken from table TOPSPARM, parameters OPR_SPECIFIED_SNPA and DELAY_SPECIFIED_SNPA. — For calling number verification, the NXX is checked in table TOPSBC, field BILLCODE. — For ONI and ANIF calls, the default NPA-NXX is displayed to the operator, taken from TOPBC field ACTUALBC in the first tuple for the trunk group. — For class charge, table TOPSBC field CHGCLSS is used to index table TOPSENTC. For value TOPSBC in this field, enter data in refinement NUMBC.

Field descriptions for conditional datafill (Sheet 2 of 3)

Field	Subfield or refinement	Entry	Explanation and action
			Billing code type (continued). • ENHBC - The enhanced TOPS billing code method, which is as follows: — For 7 to 10 digit expansion of the calling number, the SNPA is taken from table TRKGRP or TCLG7DIG (if trunk is present). Table TCLG7DIG does not overwrite the NXX of the calling number.0 — For 7 to 10 digit expansion of operator and delay calls, the SNPA is taken from table TOPSPARM, parameters OPR_SPECIFIED_SNPA and DELAY_SPECIFIED_SNPA. — For calling number verification, if subfield CLGVER = Y, the NXX is checked in table TCLGVER. Tthis verification is preformed after 7 to 10 digit expansion. — For ONI and ANIF calls, the NPA-NXX displayed to the operator is taken from table TRKGRP field DISPDIGS. — For class charge, value TOPS is always used to index table TOPSENTC. For value ENHBC in this field, enter data in refinements CLGVER and DISPDIGS.
	CLGVER	Y or N	Calling number verification. Enter data in this field if field BCTYPE = ENHBC. Enter Y to verify the calling NPA-NXX in table TCLGVER. Otherwise, enter N for no verification. For N, table TCLGVER is not accessed and all calling numbers are accepted.
	DISPDIGS	6 digits	Display digits. Enter data in this field if field BCTYPE = ENHBC. Enter the NPA-NXX for display to the operator for ONI and ANIF calls.

TRKGRP type TOPS (continued)

Field descriptions for conditional datafill (Sheet 3 of 3)

Field	Subfield or refinement	Entry	Explanation and action
	NUMBC	1 to 999	Number of billing codes. Enter data in this field if field BCTYPE = TOPSBC. Enter the number of billing codes (NXXs allocated to originate traffic on this trunk group) plus spares that are reserved in table TOPSBC. This field replaces field NOBILLCD. The MAP display indicates the range is 0-999; however, the system does not allow 0.
	ANISEIZ	numeric (2 to 30)	*ANI seizure timing* Enter the number of seconds that the trunk has to wait for reception of first digits of the ANI spill.
	ANIPDIAL	numeric (2 to 30)	*ANI partial dial timing* Enter the number of seconds that the trunk has to wait for reception of each ANI signal or digit but the first.
	TRTMTSUP	Y or N	*Treatment supervision* Enter Y to indicate that off-hook wink is returned or N to indicate on-hook is maintained.
	STNOWAIT	Y or N	*ST signal not waited for* Enter Y if the DMS does not wait for the ST signal on ONI or ANI-fail calls from a crossbar switch. Enter N if crossbar signaling is not allowed.
	ANIREQ	OFFHK or WINK	*Automatic number identification request* Enter WINK to indicate a wink is used to request the ANI spill from the end office. Enter OFFHK to indicate that an off-hook signal is returned to the end office to request the ANI spill. The default value is OFFHK.

SIGTYPE = COMFGD

If the value in field SIGTYPE is COMFGD, datafill refinements BILLCD, ANISEIZ, ANIPDIAL, TRTMTSUP, ONLNRATE, COINPD, NXXVER, and OPRHOLD as described below.

Field descriptions for conditional datafill (Sheet 1 of 4)

Field	Subfield or refinement	Entry	Explanation and action
	BILLCD	see subfield	Billing code. This field consists of subfield BCTYPE and refinements.
	BCTYPE	TOPSBC or ENHBC	Billing code type. This subfield indicates the TOPS billing code method for this trunk group. The values are the following: • TOPSBC - The earlier TOPS billing code method, which is the following: — For 7 to 10 digit expansion of the calling number, the SNPA is taken from table TOPSBC field ACTUALBC (first 3 digits). Also, the NXX in ACTUALBC overwrites the NXX of the 7 digit DN. — For 7 to 10 digit expansion of operator and delay calls, the SNPA is taken from table TOPSPARM, parameters OPR_SPECIFIED_SNPA and DELAY_SPECIFIED_SNPA. — For calling number verification, the NXX is checked in table TOPSBC, field BILLCODE. — For ONI and ANIF calls, the default NPA-NXX is displayed to the operator, taken from TOPBC field ACTUALBC in the first tuple for the trunk group. — For class charge, table TOPSBC field CHGCLSS is used to index table TOPSENTC. For value TOPSBC in this field, enter data in refinement NUMBC.

TRKGRP type TOPS (continued)

Field descriptions for conditional datafill (Sheet 2 of 4)

Field	Subfield or refinement	Entry	Explanation and action
			Billing code type (continued). • ENHBC - The enhanced TOPS billing code method, which is as follows: — For 7 to 10 digit expansion of the calling number, the SNPA is taken from table TRKGRP or TCLG7DIG (if trunk is present). Table TCLG7DIG does not overwrite the NXX of the calling number.0 — For 7 to 10 digit expansion of operator and delay calls, the SNPA is taken from table TOPSPARM, parameters OPR_SPECIFIED_SNPA and DELAY_SPECIFIED_SNPA. — For calling number verification, if subfield CLGVER = Y, the NXX is checked in table TCLGVER. Tthis verification is preformed after 7 to 10 digit expansion. — For ONI and ANIF calls, the NPA-NXX displayed to the operator is taken from table TRKGRP field DISPDIGS. — For class charge, value TOPS is always used to index table TOPSENTC. For value ENHBC in this field, enter data in refinements CLGVER and DISPDIGS.
	CLGVER	Y or N	Calling number verification. Enter data in this field if field BCTYPE = ENHBC. Enter Y to verify the calling NPA-NXX in table TCLGVER. Otherwise, enter N for no verification. For N, table TCLGVER is not accessed and all calling numbers are accepted.
	DISPDIGS	6 digits	Display digits. Enter data in this field if field BCTYPE = ENHBC. Enter the NPA-NXX for display to the operator for ONI and ANIF calls.

Field descriptions for conditional datafill (Sheet 3 of 4)

Field	Subfield or refinement	Entry	Explanation and action
	NUMBC	1 to 999	Number of billing codes. Enter data in this field if field BCTYPE = TOPSBC. Enter the number of billing codes (NXXs allocated to originate traffic on this trunk group) plus spares that are reserved in table TOPSBC. This field replaces field NOBILLCD. The MAP display indicates the range is 0-999; however, the system does not allow 0.
	ANISEIZ	numeric (2 to 30)	*ANI seizure timing* Enter the number of seconds that the trunk has to wait for reception of first digits of the ANI spill.
	ANIPDIAL	numeric (2 to 30)	*ANI partial dial timing* Enter the number of seconds that the trunk has to wait for reception of each ANI signal or digit but the first.
	TRTMTSUP	Y or N	*Treatment supervision* Enter Y to indicate that off-hook wink is returned for treatment cases or N to indicate on-hook is maintained.
	ONLNRATE	Y or N	*Online rating* Enter Y to provide online rating for calls on this trunk group. Otherwise enter N.
	COINPD	Y or N	*Coin paid* Enter Y to provide coin signaling for calls on this trunk group. Otherwise, enter N.

TRKGRP type TOPS (continued)

Field descriptions for conditional datafill (Sheet 4 of 4)

Field	Subfield or refinement	Entry	Explanation and action
	NXXVER	Y or N	*NXX verification* Enter Y to verify the calling NXX in table TOPSBC. Otherwise, enter N. When connecting cellular and interexchange carriers to TOPS for ADACC (functionality Cellular/IEC/LEC ADACC, OSDA0005), carrier DA traffic can originate from any NXX from any NPA. Therefore, TOPSBC verification should be bypassed by setting NXXVER=N. This is not enforced by table control, but is required if the trunk is to handle traffic from multiple NPAs.
	OPRHOLD	Y or N	Operator hold. This field indicates whether operator hold is used on combined FGD (COMFGD) TOPS trunks. COMFGD signalling is only supported on MF trunks with STATCLAS of COMBINED. Set OPRHOLD = Y to enable operator hold. Then, signalling ends with an offhook rather than a wink (when OPRHOLD = N). When OPRHOLD = Y, true answer is no longer propagated to the originating office since the TOPS trunk is already offhook. An additional offhook cannot be sent to indicate true answer. In most cases, the “other end" of the COMFGD trunk is an ATC trunk using EAPLAN signalling. For full use of this activity, at the originating office, the outgoing EAPLAN trunk should be datafilled with OPRHOLD = Y. This datafill is only supported in a TOPS tandem office. If OPRHOLD = N, coin traffic should not be routed over a COMFGD trunk to the TOPS office. Coin traffic needs operator hold. For more information, refer to feature BY28832 in functionality TOPS Incoming FGD Signalling, OSEA00004.

SIGTYPE = DANI

If the value in field SIGTYPE is DANI, datafill refinement LDN as described below.

Field descriptions for conditional datafill

Field	Subfield or refinement	Entry	Explanation and action
	LDN	numeric(7 digits)	*Listed directory number* Enter the seven-digit directory number for the calling number associated with the trunk group. All calls on this trunk group will originate from the same directory number. For alarms and intercept trunks, enter NXX-0000. For TOLLSTA, TOLLSUB and other dedicated trunks enter the LDN.

TRKGRP type TOPS (continued)

SIGTYPE = EAFGD

If the value in field SIGTYPE is EAFGD, datafill refinements BILLCD, ANISEIZ, ANIPDIAL, and TRTMTSUP as described below.

Field descriptions for conditional datafill (Sheet 1 of 3)

Field	Subfield or refinement	Entry	Explanation and action
	BILLCD	see subfield	Billing code. This field consists of subfield BCTYPE and refinements.
	BCTYPE	TOPSBC or ENHBC	Billing code type. This subfield indicates the TOPS billing code method for this trunk group. The values are the following: • TOPSBC - The earlier TOPS billing code method, which is the following: — For 7 to 10 digit expansion of the calling number, the SNPA is taken from table TOPSBC field ACTUALBC (first 3 digits). Also, the NXX in ACTUALBC overwrites the NXX of the 7 digit DN. — For 7 to 10 digit expansion of operator and delay calls, the SNPA is taken from table TOPSPARM, parameters OPR_SPECIFIED_SNPA and DELAY_SPECIFIED_SNPA. — For calling number verification, the NXX is checked in table TOPSBC, field BILLCODE. — For ONI and ANIF calls, the default NPA-NXX is displayed to the operator, taken from TOPBC field ACTUALBC in the first tuple for the trunk group. — For class charge, table TOPSBC field CHGCLSS is used to index table TOPSENTC. For value TOPSBC in this field, enter data in refinement NUMBC.

Field descriptions for conditional datafill (Sheet 2 of 3)

Field	Subfield or refinement	Entry	Explanation and action
			Billing code type (continued). • ENHBC - The enhanced TOPS billing code method, which is as follows: — For 7 to 10 digit expansion of the calling number, the SNPA is taken from table TRKGRP or TCLG7DIG (if trunk is present). Table TCLG7DIG does not overwrite the NXX of the calling number.0 — For 7 to 10 digit expansion of operator and delay calls, the SNPA is taken from table TOPSPARM, parameters OPR_SPECIFIED_SNPA and DELAY_SPECIFIED_SNPA. — For calling number verification, if subfield CLGVER = Y, the NXX is checked in table TCLGVER. Tthis verification is preformed after 7 to 10 digit expansion. — For ONI and ANIF calls, the NPA-NXX displayed to the operator is taken from table TRKGRP field DISPDIGS. — For class charge, value TOPS is always used to index table TOPSENTC. For value ENHBC in this field, enter data in refinements CLGVER and DISPDIGS.
	CLGVER	Y or N	Calling number verification. Enter data in this field if field BCTYPE = ENHBC. Enter Y to verify the calling NPA-NXX in table TCLGVER. Otherwise, enter N for no verification. For N, table TCLGVER is not accessed and all calling numbers are accepted.
	DISPDIGS	6 digits	Display digits. Enter data in this field if field BCTYPE = ENHBC. Enter the NPA-NXX for display to the operator for ONI and ANIF calls.

TRKGRP type TOPS (continued)

Field descriptions for conditional datafill (Sheet 3 of 3)

Field	Subfield or refinement	Entry	Explanation and action
	NUMBC	1 to 999	Number of billing codes. Enter data in this field if field BCTYPE = TOPSBC. Enter the number of billing codes (NXXs allocated to originate traffic on this trunk group) plus spares that are reserved in table TOPSBC. This field replaces field NOBILLCD. The MAP display indicates the range is 0-999; however, the system does not allow 0.
	ANISEIZ	numeric (2 to 30)	*ANI seizure timing* Enter the number of seconds that the trunk has to wait for reception of first digits of the ANI spill.
0	ANIPDIAL	numeric (2 to 30)	*ANI partial dial timing* Enter the number of seconds that the trunk has to wait for reception of each ANI signal or digit but the first.
	TRTMTSUP	Y or N	*Treatment supervision* Enter Y to indicate that off-hook wink is returned for treatment cases or N to indicate on-hook is maintained.

SIGTYPE = EAOSS

If the value in field SIGTYPE is EAOSS, datafill refinements BILLCD, ANISEIZ, ANIPDIAL, TRTMTSUP, ANIREQ, DCNVFROM, DCNVTO, INCVFROM, ICNVTO, and FOURWINK as described below.

Field descriptions for conditional datafill (Sheet 1 of 5)

Field	Subfield or refinement	Entry	Explanation and action
	BILLCD	see subfield	Billing code. This field consists of subfield BCTYPE and refinements.
	BCTYPE	TOPSBC or ENHBC	Billing code type. This subfield indicates the TOPS billing code method for this trunk group. The values are the following: • TOPSBC - The earlier TOPS billing code method, which is the following: — For 7 to 10 digit expansion of the calling number, the SNPA is taken from table TOPSBC field ACTUALBC (first 3 digits). Also, the NXX in ACTUALBC overwrites the NXX of the 7 digit DN. — For 7 to 10 digit expansion of operator and delay calls, the SNPA is taken from table TOPSPARM, parameters OPR_SPECIFIED_SNPA and DELAY_SPECIFIED_SNPA. — For calling number verification, the NXX is checked in table TOPSBC, field BILLCODE. — For ONI and ANIF calls, the default NPA-NXX is displayed to the operator, taken from TOPBC field ACTUALBC in the first tuple for the trunk group. — For class charge, table TOPSBC field CHGCLSS is used to index table TOPSENTC. For value TOPSBC in this field, enter data in refinement NUMBC.

TRKGRP type TOPS (continued)

Field descriptions for conditional datafill (Sheet 2 of 5)

Field	Subfield or refinement	Entry	Explanation and action
			Billing code type (continued). • ENHBC - The enhanced TOPS billing code method, which is as follows: — For 7 to 10 digit expansion of the calling number, the SNPA is taken from table TRKGRP or TCLG7DIG (if trunk is present). Table TCLG7DIG does not overwrite the NXX of the calling number.0 — For 7 to 10 digit expansion of operator and delay calls, the SNPA is taken from table TOPSPARM, parameters OPR_SPECIFIED_SNPA and DELAY_SPECIFIED_SNPA. — For calling number verification, if subfield CLGVER = Y, the NXX is checked in table TCLGVER. Tthis verification is preformed after 7 to 10 digit expansion. — For ONI and ANIF calls, the NPA-NXX displayed to the operator is taken from table TRKGRP field DISPDIGS. — For class charge, value TOPS is always used to index table TOPSENTC. For value ENHBC in this field, enter data in refinements CLGVER and DISPDIGS.
	CLGVER	Y or N	Calling number verification. Enter data in this field if field BCTYPE = ENHBC. Enter Y to verify the calling NPA-NXX in table TCLGVER. Otherwise, enter N for no verification. For N, table TCLGVER is not accessed and all calling numbers are accepted.
	DISPDIGS	6 digits	Display digits. Enter data in this field if field BCTYPE = ENHBC. Enter the NPA-NXX for display to the operator for ONI and ANIF calls.

Field descriptions for conditional datafill (Sheet 3 of 5)

Field	Subfield or refinement	Entry	Explanation and action
	NUMBC	1 to 999	Number of billing codes. Enter data in this field if field BCTYPE = TOPSBC. Enter the number of billing codes (NXXs allocated to originate traffic on this trunk group) plus spares that are reserved in table TOPSBC. This field replaces field NOBILLCD. The MAP display indicates the range is 0-999; however, the system does not allow 0.
	ANISEIZ	numeric (2 to 30)	*ANI seizure timing* Enter the number of seconds that the trunk has to wait for reception of first digits of the ANI spill.
	ANIPDIAL	numeric (2 to 30)	*ANI partial dial timing* Enter the number of seconds that the trunk has to wait for reception of each ANI signal or digit but the first.
	TRTMTSUP	Y or N	*Treatment supervision* Enter Y to indicate that off-hook wink is returned or N to indicate on-hook is maintained.
	ANIREQ	OFFHK or WINK	*ANI request signal format* Enter the required protocol for an ANI request. The default value is OFFHK.
Note: If a single digit is entered as a value in one of the following conversion signaling fields (DCNVFROM, DCNVTO, ICNVFROM, ICNVTO), it is implied that the entry contains a leading zero for direct comparison to the routing digits (for example, 9 implies 09, for routing digits comparison).			

TRKGRP type TOPS (continued)

Field descriptions for conditional datafill (Sheet 4 of 5)

Field	Subfield or refinement	Entry	Explanation and action
	DCNVFROM	numeric (0 to 99)	*Domestic convert from* Enter the beginning value of the domestic conversion range. This range is datafilled to indicate to TOPS that the incoming EAOSS signaling is converted before sending the signaling on to the carrier. If the call is a domestic incoming EAOSS signaled call and the routing digits fall between the values datafilled in fields DCNVFROM and DCNVTO, an indication is sent to TOPS to specify that the signaling is converted. The default value is 90.
	DCNVTO	numeric (0 to 99)	*Domestic convert to* Enter the ending value of the domestic conversion range. If the call is a domestic incoming EAOSS signaled call and the routing digits fall between the values datafilled in fields DCNVFROM and DCNVTO, an indication is sent to TOPS to specify that the signaling is converted. The default value is 90. ***Note:*** The value datafilled in field DCNVTO must be greater than or equal to the value datafilled in field DCNVFROM. If not, the following message is displayed:DCNVTO MUST BE GREATER THAN OR EQUAL TO DNCVFROM

Field descriptions for conditional datafill (Sheet 5 of 5)

Field	Subfield or refinement	Entry	Explanation and action
	ICNVFROM	numeric (0 to 99)	*International convert from* Enter the beginning value of the international conversion range. This range is datafilled to indicate to TOPS that the incoming EAOSS signaling is converted before sending the signaling on to the carrier. If the call is an international incoming EAOSS signaled call and the routing digits fall between the values datafilled in fields ICNVFROM and ICNVTO, an indication is sent to TOPS to specify that the signaling is converted. The default value is 90.
	ICNVTO	numeric (0 to 99)	*International convert to* Enter the ending value of the international conversion range. If the call is an international incoming EAOSS signaled call and the routing digits fall between the values datafilled in fields ICNVFROM and ICNVTO, an indication is sent to TOPS to specify that the signaling is converted. The default value is 94. ***Note:*** The value datafilled in field ICNVTO must be greater than or equal to the value datafilled in field ICNVFROM. If not, the following message is displayed:ICNVTO MUST BE GREATER THAN OR EQUAL TO INCVFROM
	FOURWINK	Y or N	*Four wink* Enter Y to signify that four winks are generated or regenerated by TOPS to the end office for international EAOSS calls. The first wink sent to TOPS from the carrier is regenerated back to the end office for international EAOSS calls. This allows a more accurate recording of the carrier connect time by the end office.

TRKGRP type TOPS (continued)

SIGTYPE = EAOSSIC

If the value in field SIGTYPE is EAOSS, datafill refinements BILLCD, ANISEIZ, ANIPDIAL, and TRTMTSUP as described below.

Field descriptions for conditional datafill (Sheet 1 of 3)

Field	Subfield or refinement	Entry	Explanation and action
	BILLCD	see subfield	Billing code. This field consists of subfield BCTYPE and refinements.
	BCTYPE	TOPSBC or ENHBC	Billing code type. This subfield indicates the TOPS billing code method for this trunk group. The values are the following: • TOPSBC - The earlier TOPS billing code method, which is the following: — For 7 to 10 digit expansion of the calling number, the SNPA is taken from table TOPSBC field ACTUALBC (first 3 digits). Also, the NXX in ACTUALBC overwrites the NXX of the 7 digit DN. — For 7 to 10 digit expansion of operator and delay calls, the SNPA is taken from table TOPSPARM, parameters OPR_SPECIFIED_SNPA and DELAY_SPECIFIED_SNPA. — For calling number verification, the NXX is checked in table TOPSBC, field BILLCODE. — For ONI and ANIF calls, the default NPA-NXX is displayed to the operator, taken from TOPBC field ACTUALBC in the first tuple for the trunk group. — For class charge, table TOPSBC field CHGCLSS is used to index table TOPSENTC. For value TOPSBC in this field, enter data in refinement NUMBC.

Field descriptions for conditional datafill (Sheet 2 of 3)

Field	Subfield or refinement	Entry	Explanation and action
			Billing code type (continued). • ENHBC - The enhanced TOPS billing code method, which is as follows: — For 7 to 10 digit expansion of the calling number, the SNPA is taken from table TRKGRP or TCLG7DIG (if trunk is present). Table TCLG7DIG does not overwrite the NXX of the calling number.0 — For 7 to 10 digit expansion of operator and delay calls, the SNPA is taken from table TOPSPARM, parameters OPR_SPECIFIED_SNPA and DELAY_SPECIFIED_SNPA. — For calling number verification, if subfield CLGVER = Y, the NXX is checked in table TCLGVER. Tthis verification is preformed after 7 to 10 digit expansion. — For ONI and ANIF calls, the NPA-NXX displayed to the operator is taken from table TRKGRP field DISPDIGS. — For class charge, value TOPS is always used to index table TOPSENTC. For value ENHBC in this field, enter data in refinements CLGVER and DISPDIGS.
	CLGVER	Y or N	Calling number verification. Enter data in this field if field BCTYPE = ENHBC. Enter Y to verify the calling NPA-NXX in table TCLGVER. Otherwise, enter N for no verification. For N, table TCLGVER is not accessed and all calling numbers are accepted.
	DISPDIGS	6 digits	Display digits. Enter data in this field if field BCTYPE = ENHBC. Enter the NPA-NXX for display to the operator for ONI and ANIF calls.

TRKGRP type TOPS (continued)

Field descriptions for conditional datafill (Sheet 3 of 3)

Field	Subfield or refinement	Entry	Explanation and action
	NUMBC	1 to 999	Number of billing codes. Enter data in this field if field BCTYPE = TOPSBC. Enter the number of billing codes (NXXs allocated to originate traffic on this trunk group) plus spares that are reserved in table TOPSBC. This field replaces field NOBILLCD. The MAP display indicates the range is 0-999; however, the system does not allow 0.
	ANISEIZ	numeric(2 to 30)	*ANI seizure timing* Enter the number of seconds that the trunk has to wait for reception of first digits of the ANI spill.
	ANIPDIAL	numeric(2 to 30)	*ANI partial dial timing* Enter the number of seconds that the trunk has to wait for reception of each ANI signal or digit after the first.
	TRTMTSUP	Y or N	*Treatment supervision* Enter Y to indicate that off-hook wink is returned or N to indicate on-hook is maintained.

SIGTYPE = GOSS7

If the value in field SIGTYPE is GOSS7, datafill refinements XLASYS, XLANAME, LOCLSCRN, ONITRMT, HOLDREQ, G7SETNO, and STDIGIT as described below. This SIGTYPE is valid only in a global (non-North American) environment,

Field descriptions for conditional datafill (Sheet 1 of 4)

Field	Subfield or refinement	Entry	Explanation and action
	XLAINFO	see subfield	Universal translations information. This field consists of subfield XLASYS.
	XLASYS	NIL, AC, PX, CT, FA, OFC, AM, FT, or NSC	Universal translations system. Specify the starting point within the universal translations system. These entries (systems) are defined under table ACHEAD in the data schema section of this translations guide. Datafill refinement XLANAME. Value NIL is for no system.

TRKGRP type TOPS (continued)

Field descriptions for conditional datafill (Sheet 2 of 4)

Field	Subfield or refinement	Entry	Explanation and action
	XLANAME	translator name	Translator name. This field is a refinement of XLASYS. Specify the translator name used to start translations.
	LOCLSCRN	Y or N	Local calling zone screening. This field enables local screening. The values are as follows: • Y - Use GOS Local Determination to determine if the call is local and datafill refinement LOCLZONE. For further information, refer to functionality GOS Local Determination in the Translations Guide. • N - Use the universal translations method with the CLASS option. This value is the default. For calls with no incoming trunk (Delay and system initiated calls), table TOPSPARM parameter DEFAULT_LOCLZONE enables screening and defines the initial zone name.
	LOCLZONE	name from TLCLZONE	Local zone. If field LOCLSCRN = Y, enter an initial local zone name, defined in table TLCLZONE.
	ONITRMT	see subfield	Operator number identification or treatment. This field consists of subfield ONITRMT and refinements.

TRKGRP type TOPS (continued)

Field descriptions for conditional datafill (Sheet 3 of 4)

Field	Subfield or refinement	Entry	Explanation and action
	ONITRMT	Y or N	Operator number identification or treatment. This new field indicates call routing when the calling number is not signalled. The values are as follows: • Y - Route the call to treatment and enter data in refinement TRMT. This value cannot be used for a GOSS7 outgoing (OG) trunk. Treatment avoids having an operator ask for a calling number, which may be answered incorrectly. • N - Route the call to an operator to ask the caller for the calling number. If the GOSS7 trunk is outgoing (OG), enter N. This value is the default. This field does not apply to Country Direct and inward calls, or other calls whose signaling does not include a calling or charge number. On a two-way trunk, this field applies only to incoming (IC) calls.
	TRMT	name from TMTCNTL. TREAT	Treatment. Enter data in this field if field ONITRMT = Y. Enter a treatment name defined in table TMTCNTL.TREAT for a call without a calling number, which is required for billing.
	HOLDREQ	Y or N	Request connection hold. This field indicates whether the TOPS switch may request connection hold for calls on an incoming trunk group. Connection hold keeps the connection between the operator and calling party until the TOPS switch ends the call, even if the calling party hangs up. The values are the following: • Y - request connection hold. This value cannot be used for a GOSS7 outgoing trunk. • N - do not request connection hold. If the GOSS7 trunk is outgoing only, N must be entered. This value is the default. On a two-way trunk, this field applies only to incoming calls.

TRKGRP type TOPS (continued)

Field descriptions for conditional datafill (Sheet 4 of 4)

Field	Subfield or refinement	Entry	Explanation and action
	G7SETNO	value from G7MSGSET	GOSS7 message set number. This field is an index into table G7MSGSET. The value must be previously defined in table G7MSGSET. The default is 0. If the GOSS7 trunk is incoming only, 0 must be entered. Therefore, this field applies only to outgoing and two-way trunks.
	STDIGIT	Y or N	Start signal digit. This field indicates if an ST digit should be appended to the digit stream outpulsed forward for calls completed by the operator. Therefore, transit calls are not affected. The values are Y (append digit) and N (do not append digit). The default is N. If the GOSS7 trunk is incoming only, N must be entered. This means that this field is applicable only to outgoing and two-way trunks. This field is supported only for ETSI ISUP trunks. For ANSI ISUP trunks, this field is ignored and an ST digit is not appended.

TRKGRP type TOPS (continued)

SIGTYPE = MODBELL

If the value in field SIGTYPE is MODBELL, datafill refinements BILLCD, ANISEIZ, ANIPDIAL, TRTMTSUP, and ANIREQ as described below.

Field descriptions for conditional datafill (Sheet 1 of 3)

Field	Subfield or refinement	Entry	Explanation and action
	BILLCD	see subfield	Billing code. This field consists of subfield BCTYPE and refinements.
	BCTYPE	TOPSBC or ENHBC	Billing code type. This subfield indicates the TOPS billing code method for this trunk group. The values are the following: • TOPSBC - The earlier TOPS billing code method, which is the following: — For 7 to 10 digit expansion of the calling number, the SNPA is taken from table TOPSBC field ACTUALBC (first 3 digits). Also, the NXX in ACTUALBC overwrites the NXX of the 7 digit DN. — For 7 to 10 digit expansion of operator and delay calls, the SNPA is taken from table TOPSPARM, parameters OPR_SPECIFIED_SNPA and DELAY_SPECIFIED_SNPA. — For calling number verification, the NXX is checked in table TOPSBC, field BILLCODE. — For ONI and ANIF calls, the default NPA-NXX is displayed to the operator, taken from TOPBC field ACTUALBC in the first tuple for the trunk group. — For class charge, table TOPSBC field CHGCLSS is used to index table TOPSENTC. For value TOPSBC in this field, enter data in refinement NUMBC.

Field descriptions for conditional datafill (Sheet 2 of 3)

Field	Subfield or refinement	Entry	Explanation and action
			Billing code type (continued). • ENHBC - The enhanced TOPS billing code method, which is as follows: — For 7 to 10 digit expansion of the calling number, the SNPA is taken from table TRKGRP or TCLG7DIG (if trunk is present). Table TCLG7DIG does not overwrite the NXX of the calling number.0 — For 7 to 10 digit expansion of operator and delay calls, the SNPA is taken from table TOPSPARM, parameters OPR_SPECIFIED_SNPA and DELAY_SPECIFIED_SNPA. — For calling number verification, if subfield CLGVER = Y, the NXX is checked in table TCLGVER. Tthis verification is preformed after 7 to 10 digit expansion. — For ONI and ANIF calls, the NPA-NXX displayed to the operator is taken from table TRKGRP field DISPDIGS. — For class charge, value TOPS is always used to index table TOPSENTC. For value ENHBC in this field, enter data in refinements CLGVER and DISPDIGS.
	CLGVER	Y or N	Calling number verification. Enter data in this field if field BCTYPE = ENHBC. Enter Y to verify the calling NPA-NXX in table TCLGVER. Otherwise, enter N for no verification. For N, table TCLGVER is not accessed and all calling numbers are accepted.
	DISPDIGS	6 digits	Display digits. Enter data in this field if field BCTYPE = ENHBC. Enter the NPA-NXX for display to the operator for ONI and ANIF calls.

TRKGRP type TOPS (continued)

Field descriptions for conditional datafill (Sheet 3 of 3)

Field	Subfield or refinement	Entry	Explanation and action
	NUMBC	1 to 999	Number of billing codes. Enter data in this field if field BCTYPE = TOPSBC. Enter the number of billing codes (NXXs allocated to originate traffic on this trunk group) plus spares that are reserved in table TOPSBC. This field replaces field NOBILLCD. The MAP display indicates the range is 0-999; however, the system does not allow 0.
	ANISEIZ	numeric(2 to 30)	*ANI seizure timing* Enter the number of seconds that the trunk has to wait for reception of first digits of the ANI spill.
	ANIPDIAL	numeric(2 to 30)	*ANI partial dial timing* Enter the number of seconds that the trunk has to wait for reception of each ANI signal or digit after the first.
	TRTMTSUP	Y or N	*Treatment supervision* Enter Y to indicate that off-hook wink is returned or N to indicate on-hook is maintained.
	ANIREQ	OFFHKorWINK	*ANI request* Enter WINK to indicate a wink is used to request the ANI spill from the end office. Enter OFFHK to indicate that an off-hook is returned to the end office to request the ANI spill. The default value is OFFHK.

SIGTYPE = ONI

If the value in field SIGTYPE is ONI, datafill refinements BILLCD, TONEREPT, and TRWKTIME as described below.

Field descriptions for conditional datafill (Sheet 1 of 4)

Field	Subfield or refinement	Entry	Explanation and action
	BILLCD	see subfield	Billing code. This field consists of subfield BCTYPE and refinements.
	BCTYPE	TOPSBC or ENHBC	Billing code type. This subfield indicates the TOPS billing code method for this trunk group. The values are the following: • TOPSBC - The earlier TOPS billing code method, which is the following: — For 7 to 10 digit expansion of the calling number, the SNPA is taken from table TOPSBC field ACTUALBC (first 3 digits). Also, the NXX in ACTUALBC overwrites the NXX of the 7 digit DN. — For 7 to 10 digit expansion of operator and delay calls, the SNPA is taken from table TOPSPARM, parameters OPR_SPECIFIED_SNPA and DELAY_SPECIFIED_SNPA. — For calling number verification, the NXX is checked in table TOPSBC, field BILLCODE. — For ONI and ANIF calls, the default NPA-NXX is displayed to the operator, taken from TOPBC field ACTUALBC in the first tuple for the trunk group. — For class charge, table TOPSBC field CHGCLSS is used to index table TOPSENTC. For value TOPSBC in this field, enter data in refinement NUMBC.

TRKGRP type TOPS (continued)

Field descriptions for conditional datafill (Sheet 2 of 4)

Field	Subfield or refinement	Entry	Explanation and action
			Billing code type (continued). • ENHBC - The enhanced TOPS billing code method, which is as follows: — For 7 to 10 digit expansion of the calling number, the SNPA is taken from table TRKGRP or TCLG7DIG (if trunk is present). Table TCLG7DIG does not overwrite the NXX of the calling number.0 — For 7 to 10 digit expansion of operator and delay calls, the SNPA is taken from table TOPSPARM, parameters OPR_SPECIFIED_SNPA and DELAY_SPECIFIED_SNPA. — For calling number verification, if subfield CLGVER = Y, the NXX is checked in table TCLGVER. Tthis verification is preformed after 7 to 10 digit expansion. — For ONI and ANIF calls, the NPA-NXX displayed to the operator is taken from table TRKGRP field DISPDIGS. — For class charge, value TOPS is always used to index table TOPSENTC. For value ENHBC in this field, enter data in refinements CLGVER and DISPDIGS.
	CLGVER	Y or N	Calling number verification. Enter data in this field if field BCTYPE = ENHBC. Enter Y to verify the calling NPA-NXX in table TCLGVER. Otherwise, enter N for no verification. For N, table TCLGVER is not accessed and all calling numbers are accepted.
	DISPDIGS	6 digits	Display digits. Enter data in this field if field BCTYPE = ENHBC. Enter the NPA-NXX for display to the operator for ONI and ANIF calls.

TRKGRP type TOPS (continued)

Field descriptions for conditional datafill (Sheet 3 of 4)

Field	Subfield or refinement	Entry	Explanation and action
	NUMBC	1 to 999	Number of billing codes. Enter data in this field if field BCTYPE = TOPSBC. Enter the number of billing codes (NXXs allocated to originate traffic on this trunk group) plus spares that are reserved in table TOPSBC. This field replaces field NOBILLCD. The MAP display indicates the range is 0-999; however, the system does not allow 0.
	TONEREPT	NT, TR, AT, or NA	*Tone repeat* Tone repeat is used to return a zip tone to the operator. Zip tones are associated with coin traffic only. Tone repeat enables the DMS to return answer supervision to the originating office even though the TOPS position has not yet been attached. This allows the sender to release in the originating office, which eliminates sender timeout during busy periods. If the TOPS position is eventually attached, zip tone can be provided as follows:
		NT	NT - No tone is required. Answer supervision is returned.
		TR	TR - Manual tone is repeat from the operator.
		AT	AT - Answer supervision is returned when waiting in queue and tone repeat signal is returned when presenting the call.
		NA	NA - (Nil_Action) Indicates that when a call is presented to a TOPS operator after being in the call waiting queue, the zip tone is not repeated. Answer supervision is not returned.

TRKGRP type TOPS (continued)

Field descriptions for conditional datafill (Sheet 4 of 4)

Field	Subfield or refinement	Entry	Explanation and action
			The last three entries apply to COMBINED DP ONI trunk groups only, except for the NA entry. The NA tone repeat can also be used with directory assistance (DA) trunk groups, as specified by the value DA in field STATCLASS. Otherwise, enter NT.
	TRWKTIME	numeric (10 to 500)	*Trunk wink time* Enter a numeric value to specify the trunk wink duration in milliseconds. The value of this field specifies the duration of the tone repeat request wink that is sent from the TOPS switch to the end office to request a repeat of the zip tones.

SIGTYPE = OPENNUM

Some fields in the TOPS environment do not apply in an open numbering plan environment. The following list contains the required datafill for the open numbering plan environment.

Field name	Required value
DIR	IC, 2W
LCANAME	NLCA
NPANXXRQ	N
OHNXXSCR	N
SCRNCL	NSCR
STATCLAS	APS, COIN, COMBINED, DNLOOKUP, HOTEL INTCPT, MOBILE, RESTBIL
TIMEOUT	N

If the value in field SIGTYPE is OPENNUM, datafill refinements ANISEIZ, ANIPDIAL, TRTMTSUP, ANIREQ, and LOCLSCRN as described below.

Effective TOPS07, OPENNUM is only supported in the TOPS Global environment where TOPSPARM parameter DEFAULT_PRODUCT = GLOBAL.

Field descriptions for conditional datafill

Field	Subfield or refinement	Entry	Explanation and action
	ANISEIZ	numeric (2 to 30)	*ANI seizure timing* Enter the number of seconds that the trunk has to wait for reception of first digits of the ANI spill.
	ANIPDIAL	numeric (2 to 30)	*ANI partial dial timing* Enter the number of seconds that the trunk has to wait for reception of each ANI signal or digit but the first.
	TRTMTSUP	Y or N	*Treatment supervision* Enter Y to indicate off-hook supervision is returned or enter N to indicate on-hook is maintained.
	ANIREQ	OFFHK or WINK	*ANI request* Enter WINK to indicate a wink is used to request the ANI spill from the end office. Enter OFFHK to indicate that an off-hook is returned to the end office to request the ANI spill.
	LOCLSCRN	Y or N	Local calling zone screening. This field enables local screening. The values are as follows: • Y - Use GOS Local Determination to determine if the call is local and datafill refinement LOCLZONE. For further information, refer to functionality GOS Local Determination, GOS00001, in the Translations Guide. • N - Use the universal translations method with the CLASS option. This value is the default. For calls with no incoming trunk (Delay and system initiated calls), table TOPSPARM parameter DEFAULT_LOCLZONE enables screening and defines the initial zone name.
	LOCLZONE	name from TLCLZONE	Local zone. If field LOCLSCRN = Y, enter an initial local zone name, defined in table TLCLZONE.

TRKGRP type TOPS (continued)

SIGTYPE = OSS

If the value in field SIGTYPE is OSS, datafill refinements BILLCD, ANISEIZ, ANIPDIAL, TRTMTSUP, and ANIREQ as described below.

Field descriptions for conditional datafill (Sheet 1 of 3)

Field	Subfield or refinement	Entry	Explanation and action
	BILLCD	see subfield	Billing code. This field consists of subfield BCTYPE and refinements.
	BCTYPE	TOPSBC or ENHBC	Billing code type. This subfield indicates the TOPS billing code method for this trunk group. The values are the following: • TOPSBC - The earlier TOPS billing code method, which is the following: — For 7 to 10 digit expansion of the calling number, the SNPA is taken from table TOPSBC field ACTUALBC (first 3 digits). Also, the NXX in ACTUALBC overwrites the NXX of the 7 digit DN. — For 7 to 10 digit expansion of operator and delay calls, the SNPA is taken from table TOPSPARM, parameters OPR_SPECIFIED_SNPA and DELAY_SPECIFIED_SNPA. — For calling number verification, the NXX is checked in table TOPSBC, field BILLCODE. — For ONI and ANIF calls, the default NPA-NXX is displayed to the operator, taken from TOPBC field ACTUALBC in the first tuple for the trunk group. — For class charge, table TOPSBC field CHGCLSS is used to index table TOPSENTC. For value TOPSBC in this field, enter data in refinement NUMBC.

Field descriptions for conditional datafill (Sheet 2 of 3)

Field	Subfield or refinement	Entry	Explanation and action
			Billing code type (continued). • ENHBC - The enhanced TOPS billing code method, which is as follows: — For 7 to 10 digit expansion of the calling number, the SNPA is taken from table TRKGRP or TCLG7DIG (if trunk is present). Table TCLG7DIG does not overwrite the NXX of the calling number.0 — For 7 to 10 digit expansion of operator and delay calls, the SNPA is taken from table TOPSPARM, parameters OPR_SPECIFIED_SNPA and DELAY_SPECIFIED_SNPA. — For calling number verification, if subfield CLGVER = Y, the NXX is checked in table TCLGVER. Tthis verification is preformed after 7 to 10 digit expansion. — For ONI and ANIF calls, the NPA-NXX displayed to the operator is taken from table TRKGRP field DISPDIGS. — For class charge, value TOPS is always used to index table TOPSENTC. For value ENHBC in this field, enter data in refinements CLGVER and DISPDIGS.
	CLGVER	Y or N	Calling number verification. Enter data in this field if field BCTYPE = ENHBC. Enter Y to verify the calling NPA-NXX in table TCLGVER. Otherwise, enter N for no verification. For N, table TCLGVER is not accessed and all calling numbers are accepted.
	DISPDIGS	6 digits	Display digits. Enter data in this field if field BCTYPE = ENHBC. Enter the NPA-NXX for display to the operator for ONI and ANIF calls.

TRKGRP type TOPS (continued)

Field descriptions for conditional datafill (Sheet 3 of 3)

Field	Subfield or refinement	Entry	Explanation and action
	NUMBC	1 to 999	Number of billing codes. Enter data in this field if field BCTYPE = TOPSBC. Enter the number of billing codes (NXXs allocated to originate traffic on this trunk group) plus spares that are reserved in table TOPSBC. This field replaces field NOBILLCD. The MAP display indicates the range is 0-999; however, the system does not allow 0.
	ANISEIZ	numeric (2 to 30)	*ANI seizure timing* Enter the number of seconds that the trunk has to wait for reception of first digits of the ANI spill.
	ANIPDIAL	numeric (2 to 30)	*ANI partial dial timing* Enter the number of seconds that the trunk has to wait for reception of each ANI signal or digit but the first.
	TRTMTSUP	Y or N	*Treatment supervision* Enter Y to indicate that off-hook wink is returned or N to indicate on-hook is maintained.
	ANIREQ	OFFHK or WINK	*ANI request* Enter WINK to indicate that a wink is used to request the ANI spill from the end office. Enter OFFHK to indicate that an off-hook signal is returned to the end office to request the ANI spill. The default value is OFFHK.

SIGTYPE = R2

If the value in field SIGTYPE is R2, datafill refinements XLASYS, LOCLSCRN, and ANIREQ as described below:

Effective TOPS07, R2 is only supported in the TOPS Global environment where TOPSPARM parameter DEFAULT_PRODUCT = GLOBAL.

Field descriptions for conditional datafill (Sheet 1 of 2)

Field	Subfield or refinement	Entry	Explanation and action
	XLAINFO	see subfield	Universal translations information. This field consists of subfield XLASYS.
	XLASYS	NIL, AC, PX, CT, FA, OFC, AM, FT, or NSC	Translations System. Specifies the starting point within the universal translations system. For more information, refer to the description of the universal translations tables under table ACHEAD. The entries specify the applicable head table, for example AC points to table ACHEAD. Datafill refinement XLANAME.
	XLANAME	translator name	Translator Name. This name is used to index into the applicable head table pointed to in field XLASYS. For example, if XLASYS=AC, then the head table is ACHEAD. If XLASYS=NIL, field XLANAME does not appear.
	LOCLSCRN	Y or N	Local calling zone screening. This field enables local screening. The values are as follows: • Y - Use GOS Local Determination to determine if the call is local and datafill refinement LOCLZONE. For further information, refer to functionality GOS Local Determination, GOS00001, in the Translations Guide. • N - Use the universal translations method with the CLASS option. This value is the default. For calls with no incoming trunk (Delay and system initiated calls), table TOPSPARM parameter DEFAULT_LOCLZONE enables screening and defines the initial zone name.
	LOCLZONE	name from TLCLZONE	Local zone. If field LOCLSCRN = Y, enter an initial local zone name, defined in table TLCLZONE.
	ANIAREA	see subfield	Automatic number Identification area. This field consists of subfield ANIREQ.

TRKGRP type TOPS (continued)

Field descriptions for conditional datafill (Sheet 2 of 2)

Field	Subfield or refinement	Entry	Explanation and action
	ANIREQ	Y or N	ANI required. This field specifies if the DMS switch should request ANI from the preceding exchange. If ANIREQ=Y, then datafill refinement field ANIFAIL. If ANIREQ=N, ANIFAIL does not appear. If the trunk is outgoing, then ANIFAIL must be set to N. This is enforced by table control.
	ANIFAIL	R2OPER or R2TRMT	ANI Failure. This field applies to incoming and 2-way trunks. It specifies handling of an ANI failure. This field is a refinement of ANIREQ and only appears when ANIREQ=Y. Enter R2OPER for handling by an operator; then datafill refinement OPER. Or, enter R2TRMT to send the call to treatment; then datafill refinement TRMT. Field ANIFAIL is used for tandem calls (that is, calls not destined for an operator) where ANI has been requested but not received.
	OPER	ANIF or ONI	Operator. If field ANIFAIL=R2OPER, datafill this field. This field indicates how an ANI fail call will be presented to the operator: as an ANIF call or an ONI call.
	TRMT	treatment name	Treatment. If field ANIFAIL=R2TRMT, datafill this field with a treatment name. This field indicates to discontinue the call and apply the datafilled treatment. If the treatment name is in table TRTMTACT, then the previous office is notified to provide the treatment. Otherwise, the treatment is applied locally.

For all SIGTYPE values

For all tuples, datafill fields BYPASUTR, ISDNAREA, and OPTIONS as described below.

Field descriptions for conditional datafill (Sheet 1 of 2)

Field	Subfield or refinement	Entry	Explanation and action
BYPASUTR		Y or N	*Bypass universal tone receiver* Enter Y to bypass the universal tone receiver (UTR) for automatic number identification (ANI) purposes. The default value is N.
ISDNAREA		see subfield	*ISDN area* This field consists of subfield ISDNOPTS and a refinement.
	ISDNOPTS	Y or N	*ISDN Option* To specify the bearer-capability-name option, enter Y and datafill refinement BCNAME. If no options apply, enter N.
BCNAME		alphanumeric (1 to 16 characters)	*Bearer capability name* If the entry in field ISDNOPTS is Y, enter the bearer capability to be used by this trunk group. Refer to table BCDEF for the current list of available bearer capabilities.
OPTIONS		see subfield	*Options* This field consists of subfield OPTION and refinements.

TRKGRP type TOPS (continued)

Field descriptions for conditional datafill (Sheet 2 of 2)

Field	Subfield or refinement	Entry	Explanation and action
	OPTION	LNP	New value LNP (local number portability) can be datafilled. This option allows datafill of the location routing number (LRN) against the originating trunk group for use in the AMA module 720 record. If table TOPSTOPT field LNPCLGAM = Y and the calling number is in table PORTNUMS, the calling LRN is required for the AMA record. This number is obtained by an LNP query; however, a query can be avoided if this LNP option is datafilled (unless the operator requests to connect back to the number or requests LNP information). The following restrictions apply to the LNP option: • It can be datafilled only for incoming and two-way trunk groups. • The LRN must be entered and must contain ten digits. • Only one LNP option is allowed for each trunk group. • Valid GRPTYPs are BELL, COMFGD, DANI, EAFGD, EAOSS, EAOSSIC, MODBELL, ONI, and OSS.
	LRN	10-digit directory number	Location routing number. If field OPTION = LNP, datafill a 10-digit directory number that identifies the adjacent end office and is used in recording AMA module 720 of the calling number. Exactly 10 digits must be datafilled.

Datafill example

The following example shows sample datafill for table TRKGRP type TOPS.

1. TOPS trunk group OTWAON0342C1 has the following characteristics:
   - incoming
   - most idle select sequence
   - in serving NPA 613
   - no local area screening
   - the trunk group has a standard pretranslator SPRT
   - screening class is OTWA
   - NXX screening is required on operator-handled calls
   - traffic class is RC
   - trunk group carries traffic from a mix on noncoin, coin, and hotel station types
   - the 0- traffic is indicated by seizure of trunk and timing out with no digits received
   - display of the NPANXX of originator to the operator is required
   - instructional display to the operator is required
   - instructional display to the operator is required
   - memory is allocated for 20 billing codes
   - the trunk group is ANI with Bell signaling format
   - the ANI seizure timing is 10 seconds and the ANI partial dial timing is 10 seconds
   - treatment supervision is on-hook
2. TOPS trunk group OTWAON7281C2 has characteristics similar to number 1 except
   - the trunk group has a standard pretranslator PRT1
   - the trunk group carries traffic from hotel station types only
   - the trunk group is ONI (ANI seizure, ANI partial dial, and treatment supervision fields do not apply)
   - for coin zip tone the DMS should return answer supervision when call is to wait in queue, and send tone repeat signal to end office when the operator answers

TRKGRP type TOPS (continued)

3. TOPS trunk group TOPAOSMF has characteristics similar to number 1 except
   - the trunk group serving NPA is 919
   - the trunk group has a standard pretranslator MFNL
   - the local area screening subtable entry is SUPR
   - the SCRNCL entry is NSCR
   - NXX screening is not required on operator handled calls
   - the trunk group can handle COMBINED station types and route calls to AOSS positions
   - a time out is not required to detect zero minus calls if 0- is indicated by the absence of digits following trunk seizure
   - no display of originating NPANXX to operator is required
4. TOPS trunk group ICTOPS has characteristics similar to number 1 except
   - the trunk group serving NPA is 214
   - the trunk group has a standard pretranslator TXLA
   - field SCRNCL is NSCR
   - NXX screening is not required on operator handled calls
   - time out is not required to detect zero minus calls if 0- is indicated by the absence of digits following trunk seizure
   - no display of originating NPANXX to operator is required
5. TOPS trunk group TEAOSSICI has characteristics similar to number 1 except
   - the trunk group serving NPA is 619
   - the trunk group has a standard pretranslator EAOS
   - field SCRNCL is NSCR
   - field DCNVFROM is 9
   - field DCNVTO is 9
   - field ICNVFROM is 9
   - field ICNVTO is 9
   - field FOURWINK is N
6. TOPS trunk group TCOMFGDIC1 shows field CONNTYPE set to other than NONE, therefore field CARTYPE is visible. Also, field

SIGTYPE=COMFGD to connect cellular and interexchange carriers to TOPS for ADACC. Therefore, field NXXVER=N.

MAP display example for table TRKGRP type TOPS

```
OTWAONO342C1          TOPS 0 AA NCRT IC MIDL 613 613 SPRT NLCA OTWA Y RC
  COMBINED Y Y 0 0000 NONE BELL TOPSBC 20 10 10 N Y WINK N BCNAME VOICE $
OTWAON7281C2          TOPS 0 AB NCRT IC MIDL 613 613 PRT1 NLCA OTWA Y RC
  HOTEL Y Y 0 0000 NONE ONI TOPSBC 20 AT N BCNAME 56KDATA $
TOPAOSMF             TOPS 31 NPRT NCRT IC MIDL 919 919 MFNL SUPR NSCR N RC
  COMBINED N N 0 0000 NONE BELL TOPSBC 10 5 5 N Y OFFHK Y BCNAME 56KDATA$
ICTOPS              TOPS 31 NPDGP NCRT IC MIDL 214 214 TXLA NCLA NSCR N RC
  COMBINED N N 0 0000 NONE OPENNUM 20 2 2 N OFFHK N N $
TEAOSSICI           TOPS 0 TLD NCRT IC MIDL 619 619 EAOS NLCA NSCR Y SP
  COMBINED N Y 0 0000 NONE EAOSS TOPSBC 50 10 10 Y OFFHK 9 9 9 0 N N $
TCOMFGDIC1          TOPS 0 TLD NCRT IC MIDL 629 629 PTOP NLCA NSCR Y SP
  COMBINED N Y 0 0000 CELL_MOBILE IEC COMFGD TOPSBC 0 10 10 Y N Y N N N $
TOSSIC              TOPS 0 TLD NCRT IC MIDL 619 619 PTOP NLCA NSCR Y SP
  NCSCREEN N Y  0 0000 NONE OSS TOPSBC 16 10 10 Y OFFHK N N
```

Error messages for table TRKGRP

The following error messages apply to table TRKGRP.

Error messages for table TRKGRP (Sheet 1 of 2)

Error message	Explanation and action
`LNP OPTION NOT ALLOWED FOR THIS SIGNALLING TYPE`	A TOPS trunk group with the LNP option must be datafilled with one of the following signalling type: BELL, COOMFGD, DANI, EAFGD, EAOSS, EAOSSIC, MODBELL, ONI, or OSS.
`LRN MUST BE 10 DIGITS.`	This error message is displayed for either of the following requirements: • The LRN parameter must be exactly 10 digits in length. • The LNP option must have the LRN parameter datafilled.
`MULTIPLE LNP OPTIONS NOT ALLOWED.`	Only one LNP option is allowed per trunk group.
`LRN USED ONLY FOR IC OR 2W TRUNKS.`	The LNP option can only be datafilled for incoming or 2-way TOPS trunk groups.

TRKGRP type TOPS (continued)

Error messages for table TRKGRP (Sheet 2 of 2)

Error message	Explanation and action
ONITRMT MUST BE N FOR OG TRUNKS.	If the GOSS7 trunk is outgoing only, N must be entered for field ONITRMT. In other words, treatment is only applicable for incoming (IC) and two-way (2W) trunk groups. If the user attempts to datafill ONITRMT as Y for an OG trunk, this error message is given.
HOLDREQ MUST BE N FOR OG TRUNKS.	If the GOSS7 trunk is outgoing only, N must be datafilled for field HOLDREQ. In other words, connection hold is only applicable for incoming (IC) and two-way (2W) trunk groups. If the user attempts to enter Y in HOLDREQ for an OG trunk, this error message is given.
G7SETNO MUST BE 0 FOR IC TRUNKS. STDIGIT MUST BE N FOR IC TRUNKS.	If the GOSS7 trunk is incoming only, 0 must be entered in field G7SETNO and N in field STDIGIT. In other words, G7SETNO and STDIGIT are only applicable for outgoing and two-way trunk groups. If the user attempts to enter G7SETNO with a value greater than 0 or STDIGIT as Y for an incoming trunk, this error message is given.
FIELD G7SETNO NOT DATAFILLED IN TABLE G7MSGSET PROCESSING ERRORUNEXPECTED ERROR CONDITION	The set number must be entered in table G7MSGSET before field G7SETNO can be changed. If an attempt is made to add or change the set number before it is entered in table G7MSGSET, this error message is displayed. Note, this requirement only applies when entering a new set number and does not affect the default datafill.
MUST FIRST DELETE TUPLE FROM TABLE TOPCATRK	In a TOPS global load, a TOPS trunk can not be deleted from table TRKGRP if it is still used in table TOPCATRK. If there is an attempt to delete such a tuple, this error message is given and the deletion is blocked.

Table history

TOPS14

Field SIGTYPE value AMR5 is deleted by feature 59015901 in functionality EOL for TOPS14, OSB00101.

Refinements LOCLSCRN and LOCLZONE are added to SIGTYPs GOSS7, OPENNUM, and R2 by feature 59015886 in functionality GOS Local Determination, GOS00001.

Added note about parameter POST_WINK_PRE_OFFHOOK_DELAY to table 1 subfield SIGTYPE. Table TRKGRP type TOPS has been updated for the TOPS011 release of this document. This update was made in response to a Problem Resolution System (PRS) request for the NA008 timeframe.

TOPS11

An error message is added for datafill dependency with table TOPCATRK by feature AF7576 in functionality Global Competitive Access II, GOS00007.

The field DISPLAY range is increased from {0 to 31} to {0 to 254} by feature AF7833 in functionality Table TOPSDISP Expansion, OSB00001.

TOPS10

Fields ONITRMT, HOLDREQ, G7SETNO, and STDIGIT are added by features AF7434 and AF7435 in functionality GOS ETSI-ISUP Signalling, GOS00005.

Field SNPA is only used for expanding a 7-digit calling DN to 10 digits. Field STS is added. Field NOBILLCD is deleted. Field BILLCD is added. These changes are made by feature AF7498 in functionality TOPS BC/STS/SNPA, OSB000001.

TOPS09

Field STATCLAS value APS is added by feature AF7161 in functionality Attendant Pay Station, OSB00001.

Added note about parameter POST_WINK_PRE_OFFHOOK_DELAY to table 1 subfield SIGTYPE. Table TRKGRP type TOPS has been updated for the TOPS011 release of this document. This update was made in response to a Problem Resolution System (PRS) request for the NA008 timeframe.

TOPS08.1

Field SIGTYPE value GOSS7 is added by feature AF6815 in functionality GOSS7 Signaling, GOS00004.

TOPS07

Field OPTION with value LNP added by feature AF6550 in functionality TOPS LNP, OSEA0008.

TRKGRP type TOPS (end)

Value NCSCREEN is added to field STATCLAS by feature AF6369 in functionality DNSCRN Enhancements, OSB00001.

Notes added to SIGTYPEs R2 and OPENNUM that they are only supported in the TOPS Global environment according to feature AF6428 in functionality Interface Signaling, OSB00001.

TOPS06

Field CLGID name is changed to SIGTYPE. Also, value MOPS is deleted from field SIGTYPE. These changes are from feature AN1807 in functionality TOPS06 Robustness, OSB00001.

Field OPRHOLD is added to the refinements of SIGTYP = COMFGD by PRSDOC BY28832 in functionality TOPS Incoming FGD Signalling, OSEA00004.

TOPS04

The range of field BILLCD is increased from 1-63 to 0-999 per feature AN1379 in functionality TOPS Robustness, OSB00001.

Value R2 is added to field CLGID per feature AN1228 in functionality R2 on TOPS, GOS00001.

TOPS03

Feature AN0262 in Cellular/IEC/LEC ADACC, OSDA0005:

- Added fields CONNTYPE and CARTYPE.
- Can set field SIGTYPE=COMFGD to connect cellular and interexchange carriers to TOPS for ADACC. Then, set field NXXVER=N.

BCS36

Added field TRWKTIME to refinements that apply if field SIGTYPE is set to value ONI.

BCS35

The following changes were made:

- added note regarding translation of PVN calls
- added five fields to TOPS EAOSS
- added note regarding N entry in field OHNXXSCR

TRKGRP type TTL2

Terminating 102 Test Line Trunk Group Type

The carrier milliwatt test termination trunk groups (type TTL2) are used in switches configured for milliwatt supply and balance termination testing. Decibel level and supervision combinations that are used are shown in table . “Decibel leveles and supervision combinations”.

Decibel level and supervision combinations

Level	Card code	Supervision
0 dB	1X00AA1X00AB	100 balance102 toll102 local102 steady (DMS-250 only)
- 10 dB	1X00AF	100 balance102 toll102 local102 steady (DMS-250 only)
- 15 dB	1X00AH	100 balance102 toll102 local102 steady (DMS-250 only)
- 20 dB	1X00AE1X00AG	100 balance102 toll102 local102 steady (DMS-250 only)

Note 1: Cards NT1X00AA and NT1X00AB emit a milliwatt source of 1004 Hz at a 0-dB level. Their function is the same. The NT1X00AB card is an enhanced version of the NT1X00AA card.

Note 2: If using PMTYPE DTM in table TRKMEM, the NT1X80 (enhanced digital recorded announcement machine) card provides all the above milliwatt tones according to the datafill in field MWDBLEVEL. For example, if MWDBLEVEL is datafilled as 1X100AB, then the milliwatt source of 1004 Hz at a 0 dB level comes from the NT1X80 card. Similarly, if this field is datafilled as 1X00AH, then the NT1X80 provides the -15 dB tone.

For related information, refer to TRKGRP type MAINT.

TRKGRP type TTL2 (continued)

Datafill

The following table lists the datafill for table TRKGRP type TTL2.

Field descriptions (Sheet 1 of 2)

Field	Subfield or refinement	Entry	Explanation and action
GRPKEY		see subfield	*Group key* This field consists of subfield CLLI.
	CLLI	alphanumeric (1 to 16 characters)	*Common language location identifier* Enter the common language location identifier (CLLI) code assigned to the trunk group in table CLLI.
GRPINFO		see subfields	*Variable group data* This field consists of subfields GRPTYP, TRAFSNO, PADGRP, NCCLS, MWSPRVSN, and MWDBLVL.Refer to section “General field information" in table TRKGRP for information on an alternate structure for this field that results from the datafill of table CUSTFLDS.
	GRPTYP	TTL2	*Group type* Enter TTL2 to specify the terminating 102 test line trunk group type.
	TRAFSNO	numeric (0 to 127)	*Traffic separation number* Enter the incoming and outgoing traffic separation number assigned to the trunk group. If a traffic separation number is not required, enter 0 (zero). For switches with software package NTX085AA (Traffic Separation Peg Count), enter a value from 1 to the value of office parameter TFAN_OUT_MAX_NUMBER in table OFCENG. For switches without software package NTX085AA, enter a value from 1 to 15. Incoming and outgoing traffic separation numbers 1 to 9 should be reserved for generic traffic separation numbers. For more information, refer to table TFANINT.

Field descriptions (Sheet 2 of 2)

Field	Subfield or refinement	Entry	Explanation and action
	PADGRP	alphanumeric (1 to 5 characters)	*Pad group* Enter the name of the pad group assigned to the trunk group in table PADDATA. For more information, refer to table PADDATA.
	NCCLS	NCBN NCID NCIM NCIT NCLT NCOF NCON NCOT NCRT NCTC or NOSC	*Operational measurements no-circuit class* Enter the operational measurements (OM) no-circuit class (NCCLS) to indicate which OM register is incremented if treatment GNCT (generalized no circuit) occurs. If the trunk group direction is incoming, this field is not required. Enter NCRT (no circuit). For more information, refer to table TRKGRP and the *Operational Measurements Reference Manual*.
	MWSPRVSN	BMW LMW TMW or SMW	• *Milliwatt supervision*Enter one of the following milliwatt supervision types: • BMW for 100 balance • LMW for 102 local • SMW for 102 steady • TMW for 102 toll
	MWDBLEVL	1X00AA 1X00AB 1X00AE 1X00AF 1X00AG 1X00AHor1X 00KA	• *Milliwatt decibel level*Specify the required decibel level by entering one of the following card codes: • 1X00AB (enhanced version of 1X00AA) • 1X00AA for 0 dB level • 1X00AF for -10 dB level • 1X00AH for -15 dB level • 1X00AG for -20 dB level • 1X00AE for -20 dB level (ROH tone international) • 1X00KA for 950 Hz tone at 0 dB in compliance with the China specifications

TRKGRP type TTL2 (end)

Datafill example

The following example shows sample datafill for table TRKGRP type TTL2.

MAP display example for table TRKGRP type TTL2

```
GRPKEY              GRPINFO
_____________________________________________________
TERM102T            TTL2 0 TLD NCOT TMW 1X00AB
TERM102L            TTL2 0 TLD NCOT LMW 1X00AB
TERM100Q            TTL2 0 TLD NCOT BMW 1X00AB
```

TRKGRP (T105 trunk group type)

Table name

105 Test Line Trunk Group TRKGRP (T105 trunk group type).

Functional description

A switch with a Terminating 105 Test Line may use the trunk group type T105 if the office includes the ROTL package.

In offices without the ROTL package, the Intertoll trunk group type IT is instead of trunk group type T105 for the Terminating 105 Test Line.

The operating company uses the Trunk Group table 105 Test Line to record input data for the 105 Test Lines.

Field descriptions

The following table describes field names, subfield names, and valid data ranges for table TRKGRP (T105 trunk group type).

(Sheet 1 of 3)

Field	Subfield or refinement	Entry	Explanation and action
GRPKEY		CLLI	GROUP KEY.
	CLLI	alphanumeric	COMMON LANGUAGE LOCATION IDENTIFIER. Enter the code assigned to the trunk group in the CLLI table.
GRPTYP		T105	GROUP TYPE. Enter the 105 Test Line trunk group type, T105.
TRAFSNO		0-127	TRAFFIC SEPARATION NUMBER. Enter the outgoing traffic separation number assigned to the trunk group. If not required, enter 0 (zero). If the switch has software package NTX085AA, enter 1 to value of parameter TFAN_OUT_MAX_NUMBER in table OFCENG. For a switch without software package NTX085AA, enter 1 to 15. Reserve incoming and outgoing traffic separation numbers 1-9 for generic traffic separation numbers. Refer to table TFANINT for more information.

TRKGRP (T105 trunk group type) (continued)

(Sheet 2 of 3)

Field	Subfield or refinement	Entry	Explanation and action
PADGRP		alphanumeric	PAD GROUP. Enter the name of the pad group assigned to the trunk group in table PADDATA.
NCCLS		NCRT, NCTC, NCLT, NOSC, NCBN, NCID, NCOT, NCIT, NCIM, NCON, NCOF	NO CIRCUIT CLASS. The initial value for this trunk group type is NCOT: No Circuit Other Trunk.
GRPINFO		DIR, TRAFCLS, SELSEQ, CONNGNPA, PRTNM, SCRNCL, SNPA, TERMTC, TOLLCOMP, CCWKVLD	VARIABLE GROUP DATA.
	DIR	OG	DIRECTION. Enter the direction of traffic flow, outgoing (OG).
	TRAFCLS	alphabetic	TRAFFIC USAGE CLASS. Enter the traffic usage class assigned to the trunk group.
	SELSEQ	MIDL, LIDL, ASEQ, DSEQ	SELECT SEQUENCE. If the trunk group is outgoing and sequential selection (package NTX244AA) is present, the selection order is based on the order of trunk members in table TRKMEM. Enter ASEQ for Ascending sequential selection or enter DSEQ for descending sequential selection based on the order of trunk members in table TRKMEM. If sequential selection does not apply, enter MIDL to satisfy table editor.
	CONNGNPA	numeric	CONNECTING NPA. Enter the 3-digit NPA code of the switch where the outpulsed digits are translated.

(Sheet 3 of 3)

Field	Subfield or refinement	Entry	Explanation and action
	PRTNM	NPRT	STANDARD PRETRANSLATOR TABLE NAME. Standard pretranslation not required on outgoing trunk groups, enter NPRT to satisfy table editor.
	SCRNCL	NSCR	CLASS OF SERVICE SCREENING TABLE NAME. Class of service screening is not required on outgoing trunk groups; enter NSCR to satisfy table editor. ***Note:*** For an existing trunk group SELSEQ may be changed to ASEQ from DSEQ (or vice versa) if all the members are INB (installation busy) or unequipped. Transition from ASEQ or DSEQ to either MIDL or LIDL (or versa) may be made upon defining a new group.
SNPA		numeric	SERVING NPA. Enter the 3-digit serving NPA code to which the trunk group belongs.
TERMTC		numeric	TERMINATING TOLL CENTER. If the switch where the outpulsed digits are translated is assigned a terminating toll center code, enter the terminating toll center code. If there is no terminating toll center code, enter 000.
TOLLCOMP		N or Y	TOLL COMPLETING. Enter Y (yes) if trunk group is connected to an end office (toll completing). Enter N (no) if connected to a toll (intertoll) switch.
CCWKVLD		Y or N	CARRIER CONNECT WINK. This field is not required for GRPTYP=T105. Enter N to satisfy the table editor.

Datafill example

The following example shows sample datafill for table TRKGRP (T105 trunk group type).

The following conditions apply to the sample datafill:

- The trunk group type is T105.
- The Outgoing Traffic Separation Number 27 is assigned to the trunk group.

TRKGRP (T105 trunk group type) (end)

- TLD is the name of the pad group assigned to the trunk group.
- NCOT is the no circuit class.
- The direction is outgoing (OG).
- The traffic class is miscellaneous (MI).
- The select sequence is not required, set to MIDL to satisfy table editor.
- The connecting NPA is 613.
- Pretranslation and class of service screening not required for outgoing trunk groups, set to NPRT and NSCR respectively to satisfy table editor.
- The trunk group is assigned to serving NPA 214.
- The terminating toll center code is 000.
- Trunk group is connected to an end office.

```
GRPKEY  GRPTYP  TRAFSNO PADGRP  NCCLS
GRPINFO                    SNPA TERMTC TOLLCOMP CCWKVLD
-------------------------------------------------------
TERM105 T105        27     TLD   NCOT
OG MI MIDL 972  NPRT NSCR   214     000        Y       N
```

TRKGRP (T250 trunk group type)

Table name

TRKGRP (T250 trunk group type) table

Functional description

A DMS switch office uses the T250 trunk group type for transmission tests.

Field descriptions

The following table describes field names, subfield names, and valid data ranges for table TRKGRP (T250 trunk group type).

(Sheet 1 of 4)

Field	Subfield or refinement	Entry	Explanation and action
GRPKEY		Valid CLLI datafilled in table CLLI	GROUP KEY. Enter the CLLI name used to identify the T250 trunk group type.
GRPTYP		T250	GROUP TYPE. Enter the trunk group type T250.
TRAFSNO		0 to 127	TRAFFIC SEPARATION NUMBER. Select entry as follows: If the switch has the optional traffic separation software, enter the outgoing traffic separation number (between 1 and 127) assigned to intersection. If traffic separation is not required, enter zero. If the switch has the software package that includes the Traffic Separation Peg Count feature package, the range of values for the outgoing traffic separation numbers are dependent upon parameter TFAN_OUT_MAX_NUMBER in the OFCENG table. For a switch without the Traffic Separation Peg Count feature package, the range of values for the traffic separation numbers is 0 to 15.

TRKGRP (T250 trunk group type) (continued)

(Sheet 2 of 4)

Field	Subfield or refinement	Entry	Explanation and action
			Northern Telecom (Nortel) recommends that outgoing traffic separation number 1 through 9 be reserved for generic traffic separation numbers. Refer to table TFANINT for more information regarding traffic separation numbers.
PADGRP		Valid pad group datafilled in table PADDATA	PAD GROUP. Enter the pad group name if pad groups are defined in table PADDATA. Enter NPDGP (fixed loss plan) if no pad group is required.
NCCLS			NO CIRCUIT CLASS. Upon exhausting the route list, No Circuit On-net Trunk (NCON) defines the No Circuit Class OM (in group OFZ2) to peg when a group is the last element in the route list. Enter one of the following types:
		NCRT	Enter NCRT for no circuit.
		NCTC	Enter NCTC for no circuit toll completing trunk.
		NCLT	Enter NCLT for no circuit local tandem trunk.
		NOSC	Enter NOSC for no circuit service circuit trunk.
		NCBN	Enter NCBN for no circuit business network trunk.
		NCID	Enter NCID for no circuit inward dial.
		NCOT	Enter NCOT for no circuit other trunk.
		NCIT	Enter NCIT for no circuit intertoll trunk.
		NCIM	Enter NCIM for no circuit intermachine trunk.
		NCON	Enter NCON for no circuit on-network trunk.
		NCOF	Enter NCOF for no circuit off-network trunk.
GRPINFO		see refinements	GROUP INFORMATION. Datafill the T250 trunk group type refinements.

TRKGRP (T250 trunk group type) (continued)

(Sheet 3 of 4)

Field	Subfield or refinement	Entry	Explanation and action
	DIR	IC, OG, 2W	DIRECTION. Enter IC (incoming), OG (outgoing), or 2W (two-way) to define the direction of traffic flow.
	TRAFCLS	NIL, LINE, INTERCEPT, REPAIR, XX, IR, CA, DD, IA, IE, IT, LW, MN, MT, OA, RC, SP, TC, TE, TG, TM, TO, TS, TT, TW, AL, AN, CB, CD, CP, CS, DA, DS, IN, MA, MB, NT, OF, OW, PS, RR, RS, SC, SO, TA, TI, TK, TP, VC, VR, WE, MI, ON, BL, IM, OT, DL, DB, ID	TRAFFIC CLASS. Enter NIL (the default) for the traffic usage class where the trunk group is assigned.
	SELSEQ		SELECT SEQUENCE. Enter one of the following: MIDL, LIDL, ASEQ, DSEQ, CWCTH, CCWCTH, or WIDEBAND.
		MIDL	Enter MIDL (most idle) for a 2-way trunk group with a far-end link switch with least idle select sequence, or far-end is not a link list switch, or trunk group direction is incoming or outgoing.
		LIDL	Enter LIDL (least idle) for a 2-way trunk group with a far-end link list switch with most idle select sequence.
		ASEQ	Enter ASEQ (ascending sequence) to use a trunk group member immediately following the last trunk member chosen.

TRKGRP (T250 trunk group type) (continued)

(Sheet 4 of 4)

Field	Subfield or refinement	Entry	Explanation and action
		DSEQ	Enter DSEQ (descending sequence) to select a trunk group member immediately preceding a trunk group member in use is the next trunk member chosen.
		CWCTH	Enter CWCTH (clockwise circular trunk hunting) to start a clockwise, circular search of the route list starting at the most recently released (MRR) trunk. The MRR reference point changes constantly. The search selects the first idle trunk.
		CCWCTH	Enter CCWCTH (counterclockwise circular trunk hunting) to start a counterclockwise, circular search of the route list starting at the MRR trunk. The search selects the first idle trunk.
		WIDEBAND	Enter WIDEBAND to allow the agent to handle wideband calls. Only new trunk groups may specify wideband.
	COS	0 to 119	CLASS OF SERVICE. Enter the class of service code used in screening calls.
	OHQTERM	Y or N	TERMINATING OFFHOOK QUEUING. Enter Y to allow off-hook queuing for terminating calls on this trunk group.
	CONNGNPA	3 characters	CONNECTING NPA.
	DIGITFMT	BELL, A250, MOPS, UK250, UK250X, CELLEA	DIGIT FORMAT.
	OFFCANI	7 digits (0 to 9, B to F, N)	

Datafill example

The following example shows sample datafill for table TRKGRP (T250 trunk group type).

TRKGRP (T250 trunk group type) (end)

```
GRPKEY GRPTYP TRAFSNO PADGRP NCCLS GRPINFO
_____________________________________________

T2501 T250 0 NPDGP NCIT OG NIL MIDL 0 Y 214 BELL 6112211
T2502 T250 0 NPDGP NCIT OG NIL MIDL 0 Y 214 BELL 6112211
T250TRK T250 0 NPDGP NCIT OG NIL MIDL 0 N NIL A250
```

TRKMEM

Table name

Trunk Member Table

Functional description

Table TRKMEM lists the data for each trunk specified in tables TRKGRP and TRKSGRP.

Table TRKMEM does not include members of intertoll trunk groups that have common channel interoffice signaling (CCIS) and members of CCITT7 trunk groups in DMS-300 gateway switches.

For members of intertoll trunk groups with CCIS, see table C7TRKMEM. For members of CCITT7 trunk groups in DMS-300 switches, see tables N7TRKMEM and NO7TKMEM. For members of Global Trunks, see table TRKBCHNL.

Spectrum Peripheral Module (SPM) is datafilled into the PMTYPE field of table TRKMEM.

TRKMEM records the following data for each trunk group member and for each analog or digital trunk, including the spare trunks:

- the code assigned to the trunk group in table CLLI
- the external trunk number assigned by the operating company
- the number of the trunk subgroup
- the equipment number

To change a trunk member from a working trunk group to a spare, delete the member from the working trunk group in table TRKMEM, then add the member to the spare trunk group in table TRKMEM.

> ***Note:*** If the switch has remote operation, the digital carrier module (DCM) assignments in table LMINV cannot be used for assignment to trunk groups.

Assign Common Channel Signaling (CCS7) links with a linkset type (field LSTYPE value ALINK in table C7LKSET) and an allocation scheme (field ALLOC value STBASIC or STPOOL in table C7LINK) to different digital trunk controllers (DTC) in table TRKMEM to provide for redundancy. Failure to do this leads to CCS7 outage if the DTC goes out of service.

Trunk groups DTU, LTU, MTU, TTT, and TTU

Each member of the trunk groups with a common language location identifier (CLLI) of DTU, LTU, MTU, TTT or TTU consists of two trunk circuits that are always located in adjacent slots in the trunk or maintenance trunk module. For product engineering code DTU4X23AA both circuits must be specified in the trunk member table. For the following PECs, only the physical location of the circuit is required in the trunk member table:

- TTT2X96AA
- TTU2X47AA
- LTU2X11AA
- MTU4X97AA
- DTU4X23AA

The line test units for the host switch and its associated remote location are all listed under the fixed pseudo-CLLI code LTU.

Datafill an LTU or MTU in table TRKMEM before adding them to table MTAHORIZ. If the LTU or MTU is deleted from table TRKMEM, the corresponding tuple in table MTAHORIZ is marked as deleted, but it is automatically restored if the LTU or MTU is reentered in table TRKMEM.

The following table indicates how the datafill in table TRKMEM corresponds with the time slots.

Datafill and time slots

Trunk	Time slot	Trunk	Time slot
1	1	16	17
2	2	17	18
3	3	18	19
4	4	19	20
5	5	20	21
6	6	21	22
7	7	22	23
8	8	23	24
9	9	24	25

TRKMEM (continued)

Datafill and time slots

Trunk	Time slot	Trunk	Time slot
10	10	25	26
11	11	26	27
12	12	27	28
13	13	28	29
14	14	29	30
15	15	30	31

Note 1: Time slot 16 cannot be datafilled because it is reserved for signaling. Only a maximum of 30 trunks can be datafilled in a particular carrier. If time slot 16 is activated, a maximum of 31 trunks can be datafilled. To activate time slot 16, the following conditions must be met:

- Table LTCINV must be datafilled for optional card NT6X28.
- Table LTCPSINV carriers must be CCS. Channel 16 cannot be datafilled on a CAS or digital private network signaling system (DPNSS) carrier.

Note 2: If offices are equipped with time slot flexibility for PCM30 carriers, the maximum number of non-signaling trunks that can be added to a PDTC is 480. Since datafill checks are not made to prevent operating company personnel from datafilling more than 480 non-signaling trunks, care must be exercised when adding new trunk circuits to a PDTC. If a PDTC is equipped with more than 480 trunks, PM180 switch error messages will result. In such a case, the following message is an indication that the capacity of the non-signaling trunks in the PDTC has been exceeded:

```
NO DB AVAIL
```

Note 3: All trunks with a signaling type of a DPNSS in table TRKSGRP must have their associated signaling links and inter-peripheral message links datafilled before they can be added to table TRKMEM.

Note 4: For trunk groups using the auto-identified outward dialing (AIOD) trunk feature, a tuple is automatically added to or deleted from table AIODTKN for each TRKMEM tuple added or deleted. The external trunk number of the trunk member is used as the AIOD token for table AIODTKN. The external trunk number must be unique over all trunks and lines using the same AIOD group for AIOD servicing.

X.75 trunk groups

For an X.75 trunk member to be datafilled in table TRKMEM, the following conditions must be satisfied:

- The trunk member must be datafilled first in table X75INFO.
- The DS0 channel must be datafilled in table SPECCONN against an XSG channel.

X.25 trunk groups

For an X.25 trunk member to be datafilled in table TRKMEM, the DS0 channel must be datafilled in table SPECCONN against an XSG channel.

Restricting access to table TRKMEM

Access to table TRKMEM can be restricted by datafilling table CUSTPROT. For United Kingdom customers, access to table TRKMEM must be restricted by datafilling table CUSTPROT to prevent the operating company from moving physical trunks into a different trunk group.

Datafill sequence and implications

The following tables must be datafilled before table TRKMEM:

- CLLI
- TRKGRP
- TRKSGRP
- RCCINV
- RCCPSINV
- X75INFO (for an X.75 trunk member)
- SPECCONN (for an X.75 or X.25 trunk member)
- DS0 links on a PCM30 digital trunk controller (PDTC) must first be datafilled in table LTCPSINV before digital jack trunks can be datafilled
- RCCINV (Synchronous Optical Network (SONET) remote cluster controllers (SRCC) must be datafilled first in table RCCINV)
- DS1 must be defined on its P-side in table RCCPSINV
- For PMTYPE of DTM, tables TMINV and TRSGRP must be datafilled before this table. Tables DRAMS and EDRAMINV must also be datafilled.
- When the office is configured with SPMs that have integrated services digital network (ISDN) user part (ISUP) or per trunk signaling (PTS) trunks, datafill table TRKMEM after table MNCKTPAK.

TRKMEM (continued)

Table OAVLMAP must be datafilled after table TRKMEM. Deletions in table TRKMEM are not allowed if table OAVLMAP has a reference to the tuple being deleted.

When an ISUP or a PTS trunk is added to an SPM, the following dependencies apply:

- AB-bit resources must be datafilled in table MNCKTPAK before a PTS trunk is added in TRKMEM.
- At least one MF resource must be datafilled in table MNCKTPAK before a PTS trunk with an incoming pulse type of MF is added to table TRKMEM (on a given SPM node). The incoming pulse type is datafilled in the associated trunk subgroup (table TRKSGRP).
- At least one dual-tone multifrequency (DTMF) resource must be datafilled in table MNCKTPAK before a PTS trunk with an incoming pulse type of DT is added to table TRKMEM (on a given SPM node).
- If the PM type of the TRKMEM tuple = SPM, the incoming pulse type (IPULSTYP) field in the associated table TRKSGRP tuple cannot be datafilled as NP (nil_pulse_type).
- An ISUP trunk must be datafilled in table TRKMEM before it can be datafilled in table C7TRKMEM.

Table size

0 to 16 000 000 tuples

Note: The SPM tuples in the TRKMEM table use a refinement of the MEM_VAR_AREA, which is part of the TRUNK_MEMBER_DATA_TUPLE area. Therefore, no reformats are needed for dump and restore.

TRKMEM (continued)

Datafill

The following table lists datafill for table TRKMEM.

Field descriptions

Field	Subfield	Entry	Explanation and action
CLLI		alphanumeric (1 to 16 characters)	*Common language location identifier* Enter the common language location identifier (CLLI) code that is assigned to the trunk group to which the trunk is a member. This CLLI code is assigned in table CLLI.
EXTRKNM		numeric (0 to 9999)	*External trunk number* Enter the external trunk number that is assigned to the trunk. For members of trunk groups using the AIOD option, the external trunk number must be unique over all trunks and lines using the same AIOD group.
SGRP		numeric (0 to 1)	*Subgroup number* Enter the subgroup number to which the trunk is assigned.
MEMVAR		see subfield	*Variable data for members* This field consists of subfield PMTYPE and refinements.

TRKMEM (continued)

Field descriptions

Field	Subfield	Entry	Explanation and action
	PMTYPE	ADTC AIM ALGC ARCC ATM DCA DCM DTC DTCI DTC GWC ICP IDT IDTC ILTC ISM LGC LTC MMA MTM OAU PDTC PLGC PTM RCC RCC2 RCO2 RMM RMSC RSM SMA SMA2 SPM SMU SRCC STM TAN T8A TM2	*Peripheral module type* Enter the peripheral module (PM) type on which the trunk is mounted and datafill the refinements associated with this entry value. Each refinement entry must be separated from the next by a blank space. If the CLLI code is for a trunk group of type TPS101, it must be assigned to a maintenance trunk module (MTM) or packaged trunk module (PTM). If the value of field PMTYPE is ADTC, ALGC, ARCC, DCA, IDTC, ILTC, PDTC, PLGC, datafill subfields DEQNO, DEQCKTNO, and DEQCKTTS. If the value of field PMTYPE is AIM, ATM, DTM, ISM, MMA, MTM, OAU, PTM, RMM, RSM, STM, TAN, T8A, TM2, TM4, TM8, or TMA, datafill subfields TMNO and TMCKTNO. If the value of field PMTYPE is DCM, datafill subfields DCMNO, DCMCKTNO, and DCMCKTTS. If the value of field PMTYPE is DTC, datafill subfields DTCNO, DTCCKTNO, and DTCCKTTS. If the value of field PMTYPE is DTCI, datafill subfields DTCINO, DTCICKTNO, and DTCICKTTS.

TRKMEM (continued)

Field descriptions

Field	Subfield	Entry	Explanation and action
		TM4 TM8 TMA or TMS	If the value of field PMTYPE is ICP, datafill subfields ICPNO, ICPCKTNO, and ICPCKTTS. If the value of field PMTYPE is IDT, datafill subfields IDTNO and SHELFSLT. If the value of field PMTYPE is GWC, datafill subfields GWCNO, GWCNODENO, and GWCTRMNO for CS 2000 only. If the value of field PMTYPE is LGC, datafill subfields LGCNO, LGCCKTNO, and LGCCKTTS. If the value of field PMTYPE is LTC, datafill subfields LTCNO, LTCCKTNO, and LTCCKTTS. If the value of field PMTYPE is RCC, datafill subfields RCCNO, RCCCKTNO, and RCCCKTTS. If the value of field PMTYPE is RCC2, datafill subfields RCC2NO, RCC2CKTNO, and RCC2CKTTS. If the value of field PMTYPE is RCO2, datafill subfields RCO2NO, RCO2CKTNO, and RCO2CKTTS. If the value of field PMTYPE is RMSC, datafill subfields RMSCNO, RMCCKTNO, and RMCCKTTS. If the value of field PMTYPE is RMSC, datafill subfields RMSCNO, RMCCKTNO, and RMCCKTTS. If the value of field PMTYPE is SMA, datafill subfields SMANO, SMACKTNO, and SMACKTTS. If the value of field PMTYPE is SMA2, datafill subfields SMA2NO, SMA2CKTNO, and SMA2CKTTS. If the value of field PMTYPE is SMU, datafill subfields SMUNO, SMUCKTNO, and SMUCKTTS.

TRKMEM (continued)

Field descriptions

Field	Subfield	Entry	Explanation and action
			If the value of field PMTYPE is SPM, datafill subfields SPMNO, SPMCKTNO, and SPMCKTTS. If the value of field PMTYPE is SRCC, datafill subfields SRCCNO, SRCCCKTNO, and SRCCCKTTS. If the value of field PMTYPE is TMS, datafill subfields TMSNO, TMSCKTNO, and TMSCKTTS. ***Note:*** PRA type trunks can be datafilled on an ISDN Austrian digital trunk controller (ADTC). These trunks can be datafilled on ports 1 to 31. All members must have an interface identifier specified in table LTCPSINV before they can be added. An ISDN capable ADTC shelf differs from the standard ADTC because it has an ISP card NTBX01AA and a universal time switch NT6X44EA card present. The shelf PEC is 6X02NA, the frame type is LTEI. Time switch cards AX73 and AX79 can also be used. For offices with PTMs, datafill the value MTM. PTMs are manufacturer discontinued. If the peripheral module is PDTC, digital jack trunks can be datafilled if optional package NTXK50AA (TTP-digital jack ended trunks) is in the load. Digital jack trunks can only be datafilled on time slot 1. The PDTC must be datafilled in table LTCINV and the specified circuit must be datafilled as a DS0 link in table LTCPSINV.

TRKMEM (continued)

Field descriptions

Field	Subfield	Entry	Explanation and action
			If the peripheral module is PDTC, PRA type trunks can be datafilled on ports 0 through 15 and on circuits 1 through 31. Time slot 16 can be datafilled for IDTCs with carriers of signaling type CCS. If an attempt is made to datafill time slot 16 with carriers of type CAS or DPNSS, an error message is output. For NFA trunk member, the type of peripheral module (PM) is restricted to either DTC or LTC. These PMs must be equipped with universal tone receiver (UTR). The RCO2 is a remote unit part of the CPM (Common Peripheral Module) family, used in the DMS-100 family for international applications. It is the international version of the RCC2. The RCO2 has the same architecture as the RCC2 and is based on two shelves (introduced for the Domestic RCC2 program in BCS33). RCO2 supports up to 16 PCM30 on the C-side (mapping towards the LGCO) and up to 46 PCM30 on the P-side including 24 PCM30 on the extension shelf. RCO2 supports several types of lines, trunks, and certain small remotes on its P-side, as listed below: • line concentrating module (LCM) • extended line concentrating module (LCME) • community dial office (CDO) trunks • PBX trunks • remote unit (TBD) RCO2 supports up to 16 PCM30s on the C-side (mapping towards the LGCO) and up to 46 PCM30s on the P-side, including 24 PCM30s on the extension shelf.

TRKMEM (continued)

PMTYPE = ADTC, ALGC, ARCC, DCA, IDTC, ILTC, PDTC, or PLGC

If the value of field PMTYPE is ADTC, ALGC, ARCC, DCA, IDTC, ILTC, PDTC, or PLGC, datafill subfields DEQNO, DEQCKTNO, and DEQCKTTS as described below.

Field descriptions for conditional datafill

Field	Subfield	Entry	Explanation and action
	DEQNO	numeric (0 to 511)	*Digital equipment number* Enter the number of the digital equipment module to which the trunk group member is assigned.
	DEQCKTNO	numeric (0 to 19)	*Digital equipment circuit number* Enter the number of the digital equipment module circuit card to which the trunk group member is assigned.
	DEQCKTTS	numeric (1 to 31)	*Digital equipment circuit time slot* Enter the number of the digital equipment circuit card time slot to which the trunk group member is assigned. If the flexible time slot feature is not turned on, the range of valid entries is 1 to 30. Datafill NT6X28 as an optional card in table LTCINV to turn on the flexible time slot feature.

TRKMEM (continued)

PMTYPE = AIM, ATM, ISM, DTM, MMA, MTM, OAU, PTM, RMM, RSM, STM, TAN, T8A, TM2, TM4, TM8, or TMA

If the value of field PMTYPE is AIM, ATM, ISM, DTM, MMA, MTM, OAU, PTM, RMM, RSM, STM, TAN, T8A, TM2, TM4, TM8, or TMA, datafill subfields TMNO and TMCKTNO as described below.

Field descriptions for conditional datafill

Field	Subfield	Entry	Explanation and action
	TMNO	numeric (0 to 2047)	*Trunk module number* Enter the number assigned to the trunk module on which the trunk group member is assigned.
	TMCKTNO	numeric (0 to 29)	*Trunk module circuit number* Enter the number of the trunk module circuit to which the trunk group member is assigned. The value for each subfield must be separated by a blank space.
			or
		numeric (1 to 15 and 17 to 29)	See note added to table STN.
			or
		numeric (7 to 10) 11 12 13 to 16 17 or 18 19 20 or 21 22 23 24 25 26 to 28	(AIM type TM only) If trunk emulation is provided for NT2X75AA/BA, enter 7 to 10. If trunk emulation is provided for NT1X54AA or NT2X72AA/AB/AC/BA and FX48AA is datafilled for AIM in table TMINV, enter 11. ***Note:*** Only one emulation type can be used at a time for NT2X72xx, NT2X81xx and NT2X90xx If trunk emulation is provided for Montalk and FX48AA is datafilled for AIM in table TMINV, enter 12.

TRKMEM (continued)

Field descriptions for conditional datafill

Field	Subfield	Entry	Explanation and action
			If trunk emulation is provided for NT5X30AA/BA, NT2X95AA, NT2X82AA or Montalk and FX48AA is datafilled for AIM in table TMINV, enter 13 to 16. If trunk emulation is provided for NT2X82AA, NT2X95AA or Montalk and FX48AA is datafilled for AIM in table TMINV, enter 17 or 18. If trunk emulation is provided for NT5X30AA/BA and FX48AA is datafilled for AIM in table TMINV, enter 19. If trunk emulation is provided for NT2X71AA and FX48AA is datafilled for AIM in table TMINV, enter 20 or 21. If trunk emulation is provided for NT2X81AA/AB/BA, NT2X90AD or Montalk and FX48AA is datafilled for AIM in table TMINV, enter 22. ***Note:*** Only one emulation type can be used at a time for NT2X72xx, NT2X81xx and NT2X90xx If trunk emulation is provided for NT1X54AA, NT2X72AA/AB/AC/BA, enter 23. ***Note:*** Emulation of NT2X72xx on circuit 23 and NT2X81xx on circuit 25 may not be used at the same time If trunk emulation is provided for NT5X30AA/BA, enter 24.

TRKMEM (continued)

Field descriptions for conditional datafill

Field	Subfield	Entry	Explanation and action
			If trunk emulation is provided for NT2X81AA/AB/BA, NT2X90AD or Montalk, enter 25. ***Note:*** Emulation of NT2X72xx on circuit 23 and NT2X81xx on circuit 25 may not be used at the same time If trunk emulation is provided for NT2X90AD or Montalk, enter 26 to 28.
		numeric (4 to 24, 25 to 27, 28)	(AIM based RMM type TM only) If trunk emulation is provided by a pass-through to the RMM shelf, enter 4 to 24. ***Note:*** Non-AIM circuit packs can be provisioned in these circuits and used if the RMM is not AIM based If trunk emulation is provided for NT2X90AD or Montalk, enter 25 to 27. If trunk emulation is provided for Montalk, enter 28.

PMTYPE = DCM

If the value of field PMTYPE is DCM, datafill subfields DCMNO, DCMCKTNO, and DCMCKTTS as described below.

Field descriptions for conditional datafill

Field	Subfield	Entry	Explanation and action
	DCMNO	numeric (0 to 511)	*Digital carrier module number* Enter number of the digital carrier module (DCM) to which the trunk group member is assigned.

TRKMEM (continued)

Field descriptions for conditional datafill

Field	Subfield	Entry	Explanation and action
	DCMCKTNO	numeric (0 to 4)	*Digital carrier module circuit number* Enter the number of the DCM circuit card to which the trunk group member is assigned.
	DCMCKTTS	numeric (1 to 24)	*Digital carrier module circuit time slot* Enter the number of the DCM circuit card DS1 time slot to which the trunk group member is assigned.

PMTYPE = DTC

If the value of field PMTYPE is DTC, datafill subfields DTCNO, DTCCKTNO, and DTCCKTTS as described below.

Field descriptions for conditional datafill

Field	Subfield	Entry	Explanation and action
	DTCNO	numeric (0 to 511)	*Digital trunk controller number* Enter the number of the digital trunk controller (DTC) module to which the trunk group member is assigned.
	DTCCKTNO	numeric (0 to 19)	*Digital trunk controller circuit number* Enter the number of the DTC circuit card to which the trunk group member is assigned.
	DTCCKTTS	numeric (1 to 24)	*Digital trunk controller circuit time slot* Enter the number of the circuit card DS0 time slot to which the trunk group member is assigned.

PMTYPE = DTCI

If the value of field PMTYPE is DTCI, datafill subfields DTCINO, DTCICKTNO, and DTCICKTTS as described below.

Field descriptions for conditional datafill

Field	Subfield	Entry	Explanation and action
	DTCINO	numeric (0 to 511)	*ISDN digital trunk controller number* Enter the number of the ISDN DTC (DTCI) module to which the trunk group member is assigned.
	DTCICKTNO	numeric (0 to 19)	*ISDN digital trunk controller circuit number* Enter the number of the DTCI DS1 span to which the trunk group member is assigned.
	DTCICKTTS	numeric (1 to 24)	*ISDN digital trunk controller circuit time slot* Enter the number of the circuit card DS0 time slot to which the trunk group member is assigned.

PMTYPE = GWC

If the value of field PMTYPE is GWC, datafill subfields GWCNO, GWCNODENO, and GWCTRMNO as described below. The peripheral module type of GWC applies to CS 2000 only.

Field descriptions for conditional datafill

Field	Subfield	Entry	Explanation and action
	GWCNO	numeric (0 to 255)	*Gateway control number* Enter the number of the Gateway control number (GWC) for the assignment of the trunk group number.
	GWCNODENO	numeric (0 to 4095)	*Gateway control node number* Enter the number of the GWC node number for the assignment of the trunk group member.
	GWCTRMNO	numeric (1 to 3999)	*Gateway control terminal number* Enter the number of the GWC terminal number for the assignment of the trunk group member.

TRKMEM (continued)

PMTYPE = ICP

If the value of field PMTYPE is ICP, datafill subfields ICPNO, ICPCKTNO, and ICPCKTTS as described below.

Field descriptions for conditional datafill

Field	Subfield	Entry	Explanation and action
	ICPNO	numeric (0 to 511)	*Integrated cellular peripheral number* Enter the number of the integrated cellular peripheral (ICP) to which the trunk group member is assigned.
	ICPCKTNO	numeric (0 to 19)	*Integrated cellular peripheral circuit number* Enter the number of the ICP circuit card to which the trunk group member is assigned.
	ICPCKTTS	numeric (1 to 31)	*Integrated cellular peripheral circuit time slot* Enter the number of the ICP circuit card time slot to which the trunk group member is assigned.

PMTYPE = IDT

If the value of field PMTYPE is IDT, datafill subfields IDTNO and SHELFSLT as described below.

Field descriptions for conditional datafill

Field	Subfield	Entry	Explanation and action
	IDTNO	numeric (0 to 255)	*Integrated digital terminal number* Enter the number of the integrated digital terminal (IDT) to which the trunk group member is assigned.
	SHELFSLT	see subfields	*Integrated digital terminal shelf and slot* This subfield consists of refinements SHELF and SLOT.

Field descriptions for conditional datafill

Field	Subfield	Entry	Explanation and action
	SHELF	numeric (1 to 31)	*Integrated digital terminal shelf number* Enter the number of the IDT shelf to which the trunk group member is assigned.
	SLOT	numeric (1 to 99)	*Integrated digital terminal slot number* Enter the number of the IDT slot number to which the trunk group is assigned.

PMTYPE = LGC

If the value of field PMTYPE is LGC, datafill subfields LGCNO, LGCCKTNO, and LGCCKTTS as described below.

Field descriptions for conditional datafill

Field	Subfield	Entry	Explanation and action
	LGCNO	numeric (0 to 511)	*Line group controller number* Enter the number of the line group controller (LGC) to which the trunk group member is assigned.
	LGCCKTNO	numeric (0 to 19)	*Line group controller circuit number* Enter the number of the LGC circuit card to which the trunk group member is assigned.
	LGCCKTTS	numeric (1 to 24)	*Line group controller circuit time slot* Enter the number of the LGC circuit card time slot to which the trunk group member is assigned.

TRKMEM (continued)

PMTYPE = LTC

If the value of field PMTYPE is LTC, datafill subfields LTCNO, LTCCKTNO, and LTCCKTTS as described below.

Field descriptions for conditional datafill

Field	Subfield	Entry	Explanation and action
	LTCNO	numeric (0 to 511)	*Line trunk controller number* Enter the number of the line trunk controller (LTC) module to which the trunk group member is assigned.
	LTCCKTNO	numeric (0 to 19)	*Line trunk controller circuit number* Enter the number of the LTC circuit card to which trunk group member is assigned.
	LTCCKTTS	numeric (1 to 24)	*Line trunk controller circuit time slot* Enter the number of the LTC circuit card DS0 time slot to which the trunk group member is assigned.

PMTYPE = RCC

If the value of field PMTYPE is RCC, datafill subfields RCCNO, RCCCKTNO, and RCCCKTTS as described below.

Field descriptions for conditional datafill

Field	Subfield	Entry	Explanation and action
	RCCNO	numeric (0 to 511)	*Remote cluster controller equipment number* Enter the number of the remote cluster controller (RCC) equipment to which the trunk group member is assigned.

Field descriptions for conditional datafill

Field	Subfield	Entry	Explanation and action
	RCCCKTNO	numeric (0 to 19)	*Remote cluster controller equipment circuit number* Enter the number of the RCC equipment circuit card to which the trunk group member is assigned.
	RCCCKTTS	numeric (1 to 24)	*Remote cluster controller equipment circuit time slot* Enter the number of the RCC equipment circuit card time slot to which the trunk group member is assigned.

PMTYPE = RCC2

If the value of field PMTYPE is RCC2, datafill subfields RCC2NO, RCC2CKTNO, and RCC2CKTTS as described below.

Field descriptions for conditional datafill

Field	Subfield	Entry	Explanation and action
	RCC2NO	numeric (0 to 511)	*Compact remote cluster controller equipment number* Enter the number of the compact RCC (RCC2) equipment to which the trunk group member is assigned.
	RCC2CKTNO	numeric (0 to 47)	*Compact remote cluster controller equipment circuit number* Enter the number of the RCC2 equipment circuit card to which the trunk group member is assigned.
	RCC2CKTTS	numeric (1 to 24)	*Compact remote cluster controller equipment circuit time slot* Enter the number of the RCC2 equipment circuit card time slot to which the trunk group member is assigned.

TRKMEM (continued)

PMTYPE = RC02

If the value of field PMTYPE is RCO2, datafill subfields RCO2NO, RCO2CKTNO, and RCO2CKTTS as described below.

Field descriptions for conditional datafill

Field	Subfield	Entry	Explanation and action
	RCO2NO	numeric (0 to 511)	*Offshore remote cluster controller equipment number* Enter the number of the offshore RCC (RCCO) equipment to which the trunk group member is assigned.
	RCO2CKTNO	numeric (0 to 47)	*Offshore remote cluster controller equipment circuit number* Enter the number of the RCCO equipment circuit card to which the trunk group member is assigned.
	RCO2CKTTS	numeric (1 to 31)	*Offshore remote cluster controller equipment circuit time slot* Enter the number of the RCCO equipment circuit card time slot to which the trunk group member is assigned.

PMTYPE = RMSC

If the value of field PMTYPE is RMSC, datafill subfields RMSCNO, RMCCKTNO, and RMCCKTTS as described below.

Field descriptions for conditional datafill

Field	Subfield	Entry	Explanation and action
	RMSCNO	numeric (0 to 511)	*Remote mobile switching center number* Enter the number of the remote mobile switching center (RMSC) module to which the trunk group member is assigned.

Field descriptions for conditional datafill

Field	Subfield	Entry	Explanation and action
	RMCCKTNO	numeric (0 to 19)	*Remote mobile switching center circuit number* Enter the number of the RMSC module circuit card to which the trunk group member is assigned.
	RMCCKTTS	numeric (1 to 31)	*Remote mobile switching center circuit time slot* Enter the number of the RMSC module circuit card time slot to which the trunk group member is assigned.

PMTYPE = SMA

If the value of field PMTYPE is SMA, datafill subfields SMANO, SMACKTNO, and SMACKTTS as described below.

Field descriptions for conditional datafill

Field	Subfield	Entry	Explanation and action
	SMANO	numeric (0 to 511)	*Subscriber carrier module-100s access mobile switching center number* Enter the number of the subscriber carrier module-100S access (SMA) mobile switching center module to which the trunk group member is assigned.
	SMACKTNO	numeric (0 to 19)	*Subscriber carrier module-100s access mobile switching center circuit number* Enter the number of the subscriber module access (SMA) mobile switching center module circuit card to which the trunk group member is assigned.
	SMACKTTS	numeric (1 to 24)	*Subscriber carrier module-100s access mobile switching center circuit time slot* Enter the number of the SMA mobile switching center module circuit card time slot to which the trunk group member is assigned.

TRKMEM (continued)

PMTYPE = SMA2

If the value of field PMTYPE is SMA2, datafill subfields SMA2NO, SMA2CKTNO, and SMA2CKTTS as described below.

Field descriptions for conditional datafill

Field	Subfield	Entry	Explanation and action
	SMA2NO	numeric (0 to 511)	*Expanded subscriber carrier module-100s access mobile switching center number* Enter the number of the expanded subscriber carrier module-100S access (SMA2) mobile switching center module to which the trunk group member is assigned.
	SMA2CKTNO	numeric (0 to 47)	*Expanded subscriber carrier module-100s access mobile switching center circuit number* Enter the number of the expanded subscriber module access (SMA2) mobile switching center module circuit card to which the trunk group member is assigned.
	SMA2CKTTS	numeric (1 to 24)	*Expanded subscriber carrier module-100s access mobile switching center circuit time slot* Enter the number of the SMA2 mobile switching center module circuit card time slot to which the trunk group member is assigned.

PMTYPE = SMU

If the value of field PMTYPE is SMU, datafill subfields SMUNO, SMUCKTNO, and SMUCKTTS as described below.

Field descriptions for conditional datafill

Field	Subfield	Entry	Explanation and action
	SMUNO	numeric (0 to 511)	*Subscriber carrier module-100 urban number* Enter the number of the subscriber carrier module-100 urban (SMU) to which the trunk group member is assigned.
	SMUCKTNO	numeric (0 to 19)	*Subscriber carrier module-100 urban circuit number* Enter the number of the SMU circuit card to which the trunk group member is assigned.
	SMUCKTTS	numeric (1 to 24)	*Subscriber carrier module-100 urban circuit time slot* Enter the number of the SMU circuit card time slot to which the trunk group member is assigned.

PMTYPE = SPM

If the value in field PMTYPE is SPM, datafill subfields SPMNO, SPMCKTNO, and SPMCKTTS as described below.

Field descriptions for conditional datafill

Field	Subfield	Entry	Explanation and action
	SPMNO	numeric (0 to 63)	*SPM number* Enter the number of the SPM to which the trunk group member is assigned.

TRKMEM (continued)

Field descriptions for conditional datafill

Field	Subfield	Entry	Explanation and action
	SPMCKTNO	numeric (0 to 181)	*SPM circuit number* Enter the number of the circuit card to which the trunk group member is assigned. The maximum number of circuits in an SPM is 84.
	SPMCKTTS	numeric (1 to 31)	*SPM circuit time slot* Enter the number of the PCM30 time slot to which the trunk group member is assigned. Enter the number (in the range 1 to 24) of the DS1 time slot to which the trunk group member is assigned. The DMS-100 MMP switch generates an error message if you attempt to enter data for a DS1 carrier with a time slot greater than 24.

PMTYPE = SRCC

If the value of field PMTYPE is SRCC, datafill subfields SRCCNO, SRCCCKTNO, and SRCCCKTTS as described below.

Field descriptions for conditional datafill

Field	Subfield	Entry	Explanation and action
	SRCCNO	numeric (0 to 511)	*SONET remote cluster controller number* Enter the number of the SONET remote cluster controller (SRCC) to which the trunk group member is assigned.
	SRCCCKTNO	numeric (0 to 47)	*SONET remote cluster controller circuit number* Enter the number of the SRCC circuit card to which the trunk group member is assigned.
	SRCCCKTTS	numeric (1 to 24)	*SONET remote cluster controller circuit time slot* Enter the number of the SRCC circuit card time slot to which the trunk group member is assigned.

PMTYPE = TMS

If the value of field PMTYPE is TMS, datafill subfields TMSNO, TMSCKTNO, and TMSCKTTS as described below.

Field descriptions for conditional datafill

Field	Subfield	Entry	Explanation and action
	TMSNO	numeric (0 to 255)	*TMS number* Enter the number of the Traffic Operator Position System (TOPS) message switch (TMS) to which the trunk group member is assigned.
	TMSCKTNO	numeric (0 to 19)	*TMS circuit number* Enter the number of the TMS circuit card to which the trunk group member is assigned.
	TMSCKTTS	numeric (1 to 31)	*TMS circuit time slot* Enter the number of the TMS circuit card time slot to which the trunk group member is assigned.

Datafill example

Six examples of datafill for table TRKMEM are shown below.

The first example is for a local/toll switch and consists of two digital trunks and one analog trunk.

MAP display example for table TRKMEM

```
CLLI            EXTRKNM     SGRP    MEMVAR
_____________________________________________________

OTWAON1002T0    303         0       DCM 1 1 5 $
CCIS4A            0         0       DTC 3 0 4 $
OTWAON0872AO     47         0       TM8 12 5 1 $
SRCCTRK           0         0       SRCC 0 0 1 $
```

The second example is for a gateway switch and consists of four members of trunk group with CLLI of BEL01CANMTL and four members of trunk group with CLLI of NAS01BAH.

TRKMEM (continued)

MAP display example for table TRKMEM

```
CLLI            EXTRKNM     SGRP    MEMVAR
_____________________________________________________

BEL01CANMTL     101         0       DCM 0 0 1 $
BEL01CANMTL     102         0       DCM 0 1 7 $
BEL01CANMTL     103         0       DCM 1 1 17 $
BEL01CANMTL     104         0       DCM 1 2 11 $
NAS01BAH          2         0       T8A 7 12 $
NAS01BAH          3         0       T8A 13 12 $
NAS01BAH          4         0       T8A 15 12 $
NAS01BAH          5         0       T8A 18 12 $
```

The third example shows datafill for loads including an analog jack and a digital jack. This example also shows datafill for when a PRA type trunk can be datafilled on the PDTC.

MAP display example for table TRKMEM

```
CLLI            EXTRKNM     SGRP    MEMVAR
_____________________________________________________

JACK            0           0       MTM 10 10 $
JACK            1           1       PDTC 4 0 1 $
PCM30TG1        0           0       PDTC 1 1 0 $
```

The fourth example is for a DMS-100 ISDN office with ISDN PRI and X25/X75 packet trunks.

MAP display example for table TRKMEM

```
CLLI            EXTRKNM     SGRP    MEMVAR
_____________________________________________________

PRAISDN         1           0       DTCI 0 0 1 $
X75PKT          1           0       DTC  0 0 0 $
X25PKT          1           0       DTCI 0 0 2 $
```

The fifth example shows datafill when an SPM is provisioned. The last line shows a trunk group member assigned to PCM30 time slot 25.

TRKMEM (continued)

MAP display example for table TRKMEM

```
CLLI            EXTRKNM     SGRP    MEMVAR
_____________________________________________

SPM13OG         0           0       SPM 40 5 1
SPM13OG         1           0       SPM 40 5 2
SPM13OG         2           0       SPM 40 5 3
SPM13OG         22          0       SPM 40 5 23
SPM13OG         23          0       SPM 40 5 24
SPM13IC         0           0       SPM 40 4 1
SPM13IC         1           0       SPM 40 4 2
SPM13IC         2           0       SPM 40 4 3
SPM13IC         3           0       SPM 40 4 4
SPM13IC         4           0       SPM 40 4 5
SPM13IC         5           0       SPM 40 4 6
SPM13IC         6           0       SPM 40 4 7
TLINK           1           0       SPM  2 6 24
TLINK           2           0       SPM  3 6 24
SPMCRS0OG2      0           0       SPM  3 9 25
```

The ‘TLINK’ lines show the transmission link provisioning for STM-1 channelized access. TLINK 1 is provisioned on SPM 2, circuit 6, time slot 24. TLINK 2 is provisioned on SPM 3, circuit 6, time slot 24.

Note: The name ‘TLINK’ must be already defined in table CLLI. See table MNHSCARR for the datafill sequence required to provision the channelized access path from an STM-1 carrier to the LIU7.

The last line of the datafill example shows a trunk group member assigned to PCM30 time slot 25.

The last example is for table TRKMEM when the PMTYPE is GWC. The PMTYPE of GWC is for CS 2000 only.

MAP display example for table TRKMEM

```
CLLI            EXTRKNM     SGRP    MEMVAR
_____________________________________________

CVXPRI          1           0       GWC 8 52 1$
```

TRKMEM (continued)

Supplementary information

This section explains the error messages that can occur if you enter data incorrectly in table TRKMEM.

Error message table

Error message	Explanation and action
`Delete the AINPRI entry before deleting TRKMEM.`	An attempt was made to delete a tuple that is being referenced by table AINPRI.
`DATA IN ASSOCIATED TABLES NOT DELETED YET`	An attempt was made to enter data out of sequence. A tuple in table TRKMEM can be deleted, added, or changed only if the tuple is empty or has been deleted from table C7TRKMEM.
`Failed to get AB bit resource. Increase count of AB bit resources for DSPs on this SPM in table MNCKTPAK.`	An AB-bit resource is not available for the SPM DS1 carrier to be used by the given PTS trunk.
`ERROR: The IPULSTYP field = nil_pulse_type in table TRKSGRP. Trunks datafilled on an SPM node cannot have a nil incoming pulse type.`	An attempt was made to enter data for an SPM PTS trunk and the associated incoming pulse type (IPULSTYP) field in table TRKSGRP = NP (nil_pulse_type).
`ERROR: This trunk has an associated IPULSTYP = MF in table TRKSGRP, but there are no MF resources provisioned in table MNCKTPAK.`	An attempt was made to enter data for a PTS trunk whose associated incoming pulse type = MF, but there are no MF resources provisioned in table MNCKTPAK.
`ERROR: This trunk has an associated IPULSTYP = DT in table TRKSGRP, but there are no DTMF resources provisioned in table MNCKTPAK.`	An attempt was made to enter data for a PTS trunk whose associated incoming pulse type = DT, but there are no DTMF resources provisioned in table MNCKTPAK.
`ERROR: Carrier does not support the time slot specified.`	An attempt was made to enter data for a DS1 carrier with a time slot greater than 24 (time slots 25 to 31 are for PCM30 carriers only).

Error message table

Error message	Explanation and action
`Table TRKOPTS DYNAMIC option is assigned. Manual operations are not allowed in Table TRKMEM.`	No tuples of a dynamic trunk group can be manually added, changed, or removed from table TRKMEM. Trunk groups are defined as dynamic in table TRKOPTS by field OPTION = DYNAMIC. In order to make changes to trunk members of a dynamic trunk group, use the application-specific method, such as table IPINV for the TOPS OC application. The TOPS OC application automatically allocates 48 dynamic trunk members in table TRKMEM when an IP gateway node is defined in table IPINV.
`ERROR: MG4000 does not support this GRPTYP in Table TRKGRP.`	An attempt was made to provision an unsupported trunk type on a Multi-service Gateway 4000 (MG 4000) node. Refer to *Multi-service Gateway 4000 Customer Information Guide* the list of supported trunk types.

Error messages specific to PRI with Semipermanent Packet

Use the following information for an explanation of the error messages associated with table TRKMEM.

Reason: While tables CLLI, TRKGRP, and TRKSGRP datafill, table SPECCONN does not datafill. When table TRKMEM datafills, table TRKMEM searches for a DS0 connection on table SPECCONN. If the DS0 connection is not present on table SPECCONN, the following error message displays.

```
DS-0 must be nailed up in SPECCONN for X25 PRA.
```

Action: Datafill table SPECCONN before table TRKMEM.

Reason: All the tables datafill for PRI with Semipermanent Packet LTID. An error message displays when operating company personnel try to change the DS0, which maps to a PRI with Semipermanent Packet LTID.

```
Delete the LTMAP entry first.
```

TRKMEM (continued)

Action: Delete the tuple in table LTMAP. Then try to change the tuple in table TRKMEM for the corresponding DS0.

Error messages specific to the PRI-PRI Over Multiple XPMs feature

Error messages appear under the following conditions:

If the CLLI is not mapped in table LTMAP and the protocol variant is other than NTNI:

- adding a distributed B-channel displays a warning message as follows:

```
Warning: Members spanning different PMs are supported only
for NTNI protocol variant
```

- changing a normal/distributed B-channel to distributed B-channel displays a warning message as follows:

```
Warning: Members spanning different PMs are supported only
for NTNI protocol variant
```

If the CLLI is mapped in table LTMAP and the protocol variant is other than NTNI:

- adding a distributed B-channel is rejected and the switch displays the following error message

```
ERROR: Members spanning different PMs are supported only for
NTNI protocol variant
```

- changing a normal/distributed B-channel to distributed B-channel is rejected and the switch displays the following error message:

```
ERROR: Members spanning different PMs are supported only for
NTNI protocol variant
```

If the protocol variant is NTNI, adding a distributed B-channel in the 17th distributed XPM as an interface, the switch displays the following error message

```
ERROR: Distributed PRI interface can span only 16 XPMs
```

Error messages specific to the SPM DS-1 Assignment SOC Control feature

If the The upper limit of provisioned carriers with either PRI or ISUP/PTS is reached, the following error message is displayed:

```
ERROR: This office has reached its upper limit of carriers
provisioned with PRI (ISUP/PTS) trunks in SOC option id SPMS0017
(SPMS0016)
```

Table history

NA017

CSR Q00272460 adds the warning message to the table that signify that the SOC functionality provides the hard usage control for provisioned SPM DS1P carriers assigned with either ISUP/PTS trunks or PRI trunks.

SN02

Feature 59023579 provided an error message for datafilling an unsupported trunk type on an MG 4000.

SNH01

Added the PMTYPE of GWC with the subfields and map display example for CS 2000 only.

MMP13

Added an example to illustrate the datafill required for STM-1 channelized access.

NA013

Added requirement to datafill ISUP trunks in table TRKMEM before datafilling them in table C7TRKMEM for the Succession Network VToA (Voice Trunking over ATM) application release 01.

Added error message about dynamic trunks.

MMP12

Changed the range of subfield SPMCKTTS from 1 to 24 to 1 to 31.

NA012

Added error messages for the PRI-PRI Over Multiple XPMs feature.

NA011

Added notes to the supplementary information about the error messages that display for the PRI with Semipermanent Packet feature. This information includes the reason the error messages displays and the corrective action.

CSP08

SPM system datafill was introduced to table TRKMEM.

NA010

Added note to the supplementary information about error message that the system generates when operating company personnel attempt to delete a tuple that table AINPRI is using.

TRKMEM (end)

NA008

Removed references to BITS from table 13. Table TRKMEM has been updated for the NA011 release of this document. This update was made in response to a Problem Resolution Solution (PRS) request for the NA008 timeframe.

CSP06

The following changes have been made:

- AIM added to subfield PMTYPE
- Restrictions added to field TMCKTNO for AIM type TM and AIM based RMM type TM
- Added table OAVLMAP to “Datafill sequence” section according to feature AN1589 in functionality Operator Services AIN, ENSV00014.

CSP04

The following changes were made to table LTCINV:

- added note stating that table TRKMEM interacts with table SYLNKINV and verifies that RCC2 DS1 links 0 or 8 are not defined as building integrated timing supply (BITS) links before defining the links as trunks
- removed references to PRCC, RCCI, HSI, HSIE, and IAC PM types that are no longer supported

The following changes have been made

- Note on PMTYPE DTM added to datafill sequence section.
- DTM added to subfield PMTYPE and entry to subfield TMCKTNO.

BCS26

Added note concerning the maximum number of non-signaling trunks that can be added to a PDTC.

TRKMTCE

Table name

Trunk Maintenance Table

Functional description

Table TRKMTCE is part of a maintenance feature that provides a MAP oriented approach to the maintenance of trunks as an alternative to the existing logs system. This table provides trunk maintenance capability through two main functions: thresholding and alarm generation on trunk troubles, and buffering of trunk trouble information.

The generation of alarms is caused by trunk troubles identified in software that reach or exceed operating company defined thresholds. A failure count is incremented on all software failure paths, which is measured against the defined levels to determine which, if any, alarm should be generated. The operating company datafills table TRKMTCE for minor, major, and critical alarms as percentages of the datafilled value in field ATMPCNT (the number of call attempts). The datafilled value in field ATMPCNT represents the number of call attempts that must take place on a trunk group before the failure count for that trunk is decremented by one. In other words, the trunk group is given a credit of one for every N (the value in field ATMPCNT) attempts that take place over that trunk group. This credit is provided by decrementing the failure count on that trunk group by one if it is non-zero.

Alarm generation is implemented by a thresholding process running once every 30 seconds. The purpose of the thresholding process is to establish when the failure count of a trunk group reaches or exceeds the defined alarm thresholds. The thresholding process generates the appropriate alarm based on the current trouble count and the alarm threshold levels datafilled for that trunk group. There are three different sources from which trouble reports can be generated: manual action, system initiated maintenance processes, and call processing. The algorithm is slightly different for each of these trouble report sources. The thresholding process performs its function for call processing troubles according to the following algorithm:

1. Compare adjusted failure count to maintenance and call processing critical alarm threshold levels. If the count is greater than or equal to critical, go to 5.
2. Compare adjusted failure count to maintenance and call processing major alarm threshold levels. If the count is greater than or equal to major, go to 5.
3. Compare adjusted failure count to maintenance and call processing minor alarm threshold levels. If the count is greater than or equal to minor, go to 5.

4. Get the next trunk group counter (that is, no alarm condition). Go to 1.
5. If a higher priority alarm is currently activated, go to 1. If an alarm of the same priority is currently activated, refresh the wake-up. Go to 1. If no alarm is currently activated, generate the appropriate alarm level with a 15-minute wake-up. Go to 1.

Call attempts are pegged in the same place as the corresponding operational measurements (OM). This attempt count is only necessary for trouble reports generated by call processing, and is used to adjust the failure count to more accurately represent the failure level on each trunk group.

The alarm threshold levels represent a percentage of the value in field ATMPCNT (call attempts). The values are translated to an absolute trouble count, dependent on the datafilled value in field ATMPCNT, before being compared to the adjusted failure count. For example, if the value in field ATMPCNT is 100 and the value in field CPMAJALM is 20, the absolute trouble count is 20 for the major alarm threshold.

Thresholding on troubles reported by maintenance processes is slightly different in that attempt counters are not maintained. The alarm thresholds in table TRKMTCE represent absolute values of maintenance reported troubles. The failure count is incremented by the buffering procedure and the alarms are generated by the thresholding process. There is no adjustment of the failure count according to the attempts. In addition, the failure count is not incremented on reports that indicate that a trunk has passed a test.

No thresholding is performed on trouble reports generated due to manual action. These reports do not increment a failure count or attempt count, but are buffered in the maintenance upper buffers.

On generation of an alarm, a 15 minute wake-up is initiated during which the alarm level cannot decrease except when manually cleared. If a higher priority alarm is generated, it is set with a refreshed 15-minute wake-up.

The buffering capability places trunk trouble information in buffers for each trunk group, and trunks are identified by their member number within the buffer. The operating company has the capability to allocate buffers for each trunk group in the office.

For each trunk group, two groups of buffers exist to identify the members with the problem. One group is for problems reported by maintenance processes, and the other group is for problems reported by call processing. Each group consists of a pair of buffers. One of these is a trouble buffer that can contain up to ten entries representing the ten worst members of the group (this buffer

TRKMTCE (continued)

is referred to as the upper buffer for the remainder of this description). The other buffer can contain up to five entries and is used to screen out members with only one occurrence of a problem (this buffer is referred to as the lower buffer).

Store for the two groups of buffers can be allocated selectively by table control for table TRKMTCE. Both maintenance and call processing buffers can be allocated, only one of the two, or neither, as required. If a group of buffers is required, the store for the upper and lower buffers is allocated in the manner described below.

One buffer has ten entries, and contains the ten most recent, worst members of the trunk group. This means that the trunk group members that have the highest failure count (greater than one) and had these failures most recently are found in this buffer. The other buffer has five entries, and is used to screen out members with less than two troubles. Two fields in table TRKMTCE are used to allocate or deallocate the buffers. Field CPBUFRQD allocates the call processing buffers, and MTBUFRQD allocates the maintenance buffers. Both these fields take the values Y or N. Buffers cannot be deallocated while a continuous buffer display is in progress at the TRKSTRBL level at any MAP.

The upper buffer structure contains the following information:

- identification of the group member (trunk member number)
- time of the last trouble (yr/mon/day/hr/min/sec)
- count of the troubles on that member (integer)
- index to a table of trouble descriptions

The lower buffer structure contains the following information:

- identification of the group member (trunk member number)
- time of the last trouble (yr/mon/day/hr/min/sec)

Only the contents of the upper buffers are accessible through the TTP and TRKSTRBL levels of the MAP. MAP level TRKSTRBL is placed below the TRKS level, parallel to the STAT level.

When a trouble occurs on a trunk group member (for which a log report is generated) during call processing, maintenance processing, or manual action, a buffering procedure is called to update the trouble buffers associated with that member. This procedure searches the upper buffer of the group for an instance of the member with the problem. If the member is found in the upper buffer, the last trouble time and the trouble index fields of the entry is updated. In addition, the trouble count field of the entry is incremented by one.

If the member is not found in the upper buffer, the procedure searches the lower buffer for the group member. If the member is found, the entry in the lower buffer is moved into the upper buffer. The entry being moved fills an empty spot in the ten-entry buffer if one is available, or overwrites the oldest entry. If the group member is not found in the lower buffer, it is placed there by filling an empty spot or overwriting the oldest entry. Note that trouble information generated from manual action is placed directly in the upper buffer of the required trunk group and no entries are screened out by the lower buffer.

The following tables show examples of a trunk experiencing two troubles and the resulting buffer entries.

First trouble, upper buffer

Entry	ID	Count	Time stamp
0			
			.
			.
			.
9			

First trouble, lower buffer

Entry	ID	Time stamp
0	3	1984/05/09 04:33:21
		.
		.
		.
4		

Second trouble, upper buffer (Sheet 1 of 2)

Entry	ID	Count	Time stamp
0			1984/05/09 04:34:19
			.

TRKMTCE (continued)

Second trouble, upper buffer (Sheet 2 of 2)

.
.
9

Second trouble, lower buffer

Entry	ID	Time stamp
0	3	
		.
		.
		.
4		

Table TRKMTCE divides troubles found on trunks into three categories: troubles generated by call processing, troubles generated by maintenance processes, and trouble information generated by manual action. The trouble information generated by call processing and maintenance processes is buffered and subject to alarm generation. Separate alarm level definition and buffering is available to the operating company for these two types of trunk troubles. Trouble information generated as a result of manual action is placed directly in the maintenance upper buffer and has no effect on alarm generation.

A list of all the text descriptions that can be seen in a buffer entry when it is displayed at the TRKSTRBL level is shown below.

- VACANT CODE ANNOUNCEMENT
- NO CIRCUIT AVAILABLE
- MISDIRECTED CAMA ANNOUNCEMENT
- UNAUTHORIZED CODE ANNOUNCEMENT
- EMERGENCY ANNOUNCEMENT
- INWATS OUTSIDE LEGAL ZONE
- PERMANENT SIGNAL
- PARTIAL DIAL
- EXTRA PULSE
- FALSE START

- MUTILATED PULSE
- MUTILATED DIGIT
- INVALID ST DIGIT RECEIVED
- ANI OFFICE FAILURE
- ANI NUMBER FAILURE
- ANI TIME OUT
- NO START DIAL
- INTEGRITY FAILURE
- INTEGRITY LOST
- FALSE KP
- REVERSED TRUNK
- UNEXPECTED STOP DIAL
- EXPECTED STOP TIME OUT
- CAMA POSITION FAULT
- CAMA POSITION TROUBLE
- ANNOUNCEMENT MATCH TROUBLE
- TRUNK RESET FAILED
- TRUNK RESET
- HIT DETECTED
- PRE ROUTE ABANDON
- NO5 SIGNALING VIOLATION
- DIG RCVR NOISE HIGH
- DIG RCVR NOISE MARGINAL
- NO INTERDIGIT PAUSE
- LARGE TWIST
- MORE THAN TWO FREQS
- FLUCTUATION ON MF RECEIVER
- RINGING FAILED
- COIN COLLECT FAIL
- COIN RETURN FAIL
- ANI TEST FAILED

TRKMTCE (continued)

- COIN PRESENT TEST FAILED
- CP IOMSG LOST
- BAD CP IOMSG
- ANI FAILED, ONI SUCCEEDED
- INVALID ANI REQUEST
- BAD KEYSET
- LINE CARD FAULT
- DU SYNC LOST
- GROUND LOOP FAIL
- ABANDON ON RP INC TRUNK
- OVERALL RP TIMEOUT
- INVALID RP DIGIT
- UNDETERMINED RP ERROR
- EXCESS DIGITS
- DP PERMANENT SIGNAL
- MF PERMANENT SIGNAL
- DGT PERMANENT SIGNAL
- DP RECEPTION TROUBLE
- MF RECEPTION TROUBLE
- DGT RECEPTION TROUBLE
- ANI RECEPTION TROUBLE
- ONI RECEPTION TROUBLE
- LOCKOUT ON
- LOCKOUT OFF
- OUTPULSING TROUBLE
- ROUTING TROUBLE
- BIPOLAR VIOLATION

Table TRKMTCE is part of an optional feature available to the operating companies. If this feature is present, the trunk logs that it replaces are automatically suppressed. These logs are still available to the operating company and can be produced by selectively removing suppression of the required logs.

The following logs are suppressed when this feature is present:

- TRK110 : lockout on report
- TRK111 : outpulsing trouble report
- TRK112 : lockout off report
- TRK113 : trunk integrity trouble report
- TRK114 : DP reception trouble report
- TRK115 : DP permanent signal report
- TRK116 : MF reception trouble report
- TRK117 : MF permanent signal report
- TRK118 : ANI trouble reception report
- TRK119 : ANI trouble reception report
- TRK120 : ONI trouble report
- TRK121 : outpulsing trouble report
- TRK122 : integrity trouble report
- TRK123 : PP CC communication trouble report
- TRK162 : DTMF trunk trouble report
- TRK182 : DGT reception trouble report
- TRK183 : DGT permanent signal report

The suppression of these logs is accomplished by datafilling table LOGCLASS for the logs listed above. Field SUPPRESS in table LOGCLASS is used to suppress the log. The log class for these logs defaults to 31, so operating companies purchasing this feature should check their present datafill for table LOGCLASS. These logs can be resumed by setting field SUPPRESS back to N (no).

Datafill sequence and implications

There is no requirement to datafill other tables prior to table TRKMTCE.

Table size

0 to 8191 tuples

Table size is allocated by table DATASIZE. The size of the table must be large enough to contain all the common language location identifiers (CLLI) in table CLLIMTCE, and cannot be greater than the maximum number of trunk groups that can be datafilled in table TRKGRP.

TRKMTCE (continued)

Datafill

The following table lists datafill for table TRKMTCE.

Field descriptions (Sheet 1 of 2)

Field	Subfield or refinement	Entry	Explanation and action
CLLI		alphanumeric (1 to 16 characters)	*Common language location identifier* Enter the common language location identifier (CLLI) code that is assigned to the trunk group in table CLLI.
CPMINALM		numeric (0 to 101)	*Call processing troubles minor alarm* Enter the percentage of failures, based on the call attempt value, that must be reached before a minor alarm is activated. If no alarm is required, enter 101. The default value is 101. Entries outside this range are invalid.
CPMAJALM		numeric (0 to 101)	*Call processing troubles major alarm* Enter the percentage of failures, based on the call attempt value, that must be reached before a major alarm is activated. If no alarm is required, enter 101. The default value is 101. Entries outside this range are invalid.
CPCRTALM		numeric (0 to 101)	*Call processing troubles critical alarm* Enter the percentage of failures, based on the call attempt value, that must be reached before a major alarm is activated. If no alarm is required, enter 101. The default value is 101. Entries outside this range are invalid.
CPBUFRQD		Y or N	*Call processing trouble buffer required* Enter Y (yes) if a call processing trouble buffer is required. Otherwise, enter N (no).
ATMPCNT		numeric (1 to 32767)	*Attempts counter* Enter the number of attempts that must occur before decrementing the failure count by one. The default value is 100.

Field descriptions (Sheet 2 of 2)

Field	Subfield or refinement	Entry	Explanation and action
MTMINALM		numeric (0 to 32767)	*Maintenance troubles minor alarm* Enter the number of maintenance reported troubles that must be reached or exceeded before the minor alarm is activated. The default value is 0 (zero).
MTMAJALM		numeric (0 to 32767)	*Maintenance troubles major alarm* Enter the number of maintenance reported troubles that must be reached or exceeded before the major alarm is activated. The default value is 0 (zero).
MTCRTALM		numeric (0 to 32767)	*Maintenance troubles critical alarm* Enter the number of maintenance reported troubles that must be reached or exceeded before the critical alarm is activated. The default value is 0 (zero).
MTBUFRQD		Y or N	*Maintenance trouble buffer required* Enter Y if a maintenance trouble buffer is required. Otherwise, enter N.

Datafill example

The following example shows sample datafill for table TRKMTCE.

MAP display example for table TRKMTCE

```
CLLI        CPMINALM CPMAJALM CPCRTALM CPBUFRQD
 ATMPCNT MTMINALM MTMAJALM MTCRTALM MTBUFRQD
_____________________________________________________

TRKGRP1     10       20       30        Y
 100     11       21       35       Y
```

TRKNAME

Table name

Trunk Group ADNUM to CLLI Mapping Table

Functional description

Table TRKNAME is common to all DMS-100 software, and is a *read-only* table. Fields ADNUM and CLLI in table TRKNUM match the same fields in table CLLI with the same values. The DMS switch modifies field ADNUM in table TRKNAME when field ADNUM in table CLLI is modified. The changes to ADNUM in table CLLI are reflected in table TRKNAME.

The operating company associates an administrative number (ADNUM) with each DMS-100 family trunk group common language location identifier (CLLI). The datafill in table CLLI enables this association between a specific trunk group CLLI and a fixed administration number (ADNUM). The ADNUM is unique and remains fixed throughout the life of the trunk group, regardless of the number of dump and restores performed on the DMS. The following downstream processors use the ADNUM to identify the CLLI:

- AMA (Automatic Message Accounting)
- CAROT (Centralized Automatic Reporting On Trunks [used by ROTL])
- EADAS/DC (Engineering and Administrative Data Acquisition System for Data Collection)
- EADAS/NM (Engineering and Administrative Data Acquisition System for Network Management)
- SES (Service Evaluation System)
- SMDR (Station Message Detail Recording)

In the case of AMA, table TRKNAME is also used to determine the value to be recorded in field TRKGRP of AMA records. This field is included in AMA records with structure codes equal to 047xx, 00734, or both. Structure code 047xx is used for inter-LATA (local access and transport area) carrier/international carrier (IC/INC) event information. Structure code 00734 is used for inter-LATA calls transferred to an IC/INC operator service system.

Datafill sequence and implications

Table CLLI must be datafilled before table TRKNAME.

Table size

0 to 8192 tuples

Table TRKNAME is always equal in size to table CLLI. The size of both tables is controlled by the entry for table CLLI in table DATASIZE.

Datafill

The following table lists datafill for table TRKNAME.

Field descriptions

Field	Subfield or refinement	Entry	Explanation and action
ADNUM		numeric (0 to 8191)	*Administrative number* This field contains the administrative value defined in field ADNUM of table CLLI.
CLLI		alphanumeric (1 to 16 characters)	*CLLI character name* This field contains the name of the common language location identifiers (CLLI) defined in field CLLI of table CLLI.

Datafill example

An example of datafill for table TRKNAME is shown below. This example shows how the datafill in table CLLI is reflected in table TRKNAME. The CLLI in this example is OTWAON0202AT. The assigned field ADNUM value corresponding to this CLLI is 51.

MAP display example for table CLLI

```
CLLI            ADNUM       TRKSIZE     ADMININF
_____________________________________________________

OTWAON0202AT    51          10          xx
```

MAP display example for table TRKNAME

```
ADNUM           CLLI
_____________________________________________________

51              OTWAON0202AT
```

TRKOPTS

Table name

Trunk Options

Functional description

Use table TRKOPTS to provision options on trunk groups.

Datafill sequence and meaning

Datafill the following tables before table TRKOPTS:

- CLLI
- ANNS
- TRKGRP
- TRKSGRP
- LSPINFO

Note: To use the LSPAO option, enter the name of the local service provider in table LSPINFO.

Table size

0 to 131 072 tuples

Datafill

Table TRKOPTS has two major fields: OPTKEY and OPTINFO. The datafill for the two fields is described separately below. For both OPTKEY datafill and OPTINFO datafill, options are listed in alphabetical order. Datafill examples are provided in the OPTINFO datafill section.

Note: A trunk group is defined as a BICC trunk group when the group is datafilled in table TRKOPTS with ISUPPLUS signaling.

TRKOPTS (continued)

OPTKEY datafill

The following table lists the OPTKEY datafill for table TRKOPTS.

Field descriptions

Field	Subfield	Entry	Explanation and action
OPTKEY		see subfields	Option key. This field consists of subfields CLLI and OPTION.
	CLLI	1 to 16 alphanumeric characters	Common language location identifier. This subfield indicates the CLLI code of the trunk group to which the option is assigned.
	OPTION		Subfield OPTION specifies the name of the option assigned to the CLLI specified in subfield CLLI.
		BCMAP BLOCKLNP BWRLSIND CFWOPT CGETSNOTQ CGETSRESP CGETSTQ CITYCODE CNAMINGN CPT	Enter BCMAP to set the connection type (bearer capability) for outgoing setup messages over BTUP, DASS2, and ETSI ISUP. The BCMAP option only applies to BTUP, DASS2, and ETSI ISUP trunk groups. Refer to OPTION=BCMAP for additional information.
		CSSCRN DCF DFLTPI DLYFWDXMT DYNAMIC	Enter BLOCKLNP to block calls where the previous switch did not perform a necessary LNP query. Activate option BLOCKLNP in table LNPOPTS before you add option BLOCKLNP in table TRKOPTS. When you datafill table TRKOPTS first, the switch does not use the BLOCKLNP information in table TRKOPTS. Refer to table OPTION=BLOCKLNP for additional information.
		FWRLSIND HPCTQ HPCNOTQ ICDS ICMOG INTL LDA	Enter BWRLSIND for the release indication to be applied to the incoming CAS trunk with a backward release. For Italy CAS, this indication is a congestion tone. This option is only valid on FDCP trunks. Refer to OPTION=BWRLSIND for additional information.

TRKOPTS (continued)

Field descriptions

Field	Subfield	Entry	Explanation and action
		LMG LSPAO LSPFE MCID MWI NATL_CPC NETOPTS OFFNET _CARRID OGMOG OSNC PRESEL RCI REQCLI RINGBACK RRID SLOWREL TELETAXE TELETAXE _NOSIG TRTORLS TXICD	Enter CFWOPT to make the system substitute the original calling number with the DN that activates the Call Forward feature. Refer to OPTION=CFWOPT for additional information.
			Enter CGETSNOTQ to turn off Carrier GETS[a] queuing for selected trunks groups when using office-wide queuing. Note that if the CGETSTQ option is datafilled on the given trunk group, the CGETSNOTQ will not be allowed to be datafilled on that same trunk group. Note also that this option is datafilled for terminating (OG or 2W) trunk groups only. Enter CGETSRESP to activate or deactivate the sending to the previous office of responses (ACM, or Call Proceeding and Progress messages) - when a Carrier GETS call is queued, but no announcement is provisioned. This option provides the trunk group level control. Enter CGETSTQ to activate Carrier GETS Trunk Queuing

TRKOPTS (continued)

Field descriptions

Field	Subfield	Entry	Explanation and action
			Enter the two-digit CITYCODE to prefix the outgoing calling-number for Brazilian calls with a subscriber incoming nature-of-address (NOA). Refer to OPTION=CITYCODE for additional information. Enter CNAMINGN to allow the switch to send the calling party name in the GN parameter of ISUP IAM. Refer to OPTION=CNAMINGN for additional information. Enter CPT to assign the Call Progress Tone feature to the trunk CLLI specified in subfield CLLI. Refer to OPTION=CPT for additional information. Enter CSSCRN to assign Carrier Selection screening to the trunk CLLI specified in subfield CLLI. Refer to OPTION=CSSCRN for additional information and subfields. Enter DCF to permit the trunk to reject call-forwarded calls. This option applies to calls that have been forwarded to a PRI line. Refer to OPTION=DCF for additional information. Enter DFLTPI to specify a default presentation indicator for an incoming CAS-PBX trunk. Enter DLYFWDXMT to select option Delay Forward Transmission. Option DLYFWDXMT blocks the forward speech path of an outgoing or two-way trunk until answer supervision is received or a specified time-out value is exceeded. Refer to OPTION=DLYFWDXMT for additional information. Enter DYNAMIC to specify a dynamic trunking application. Refer to OPTION=DYNAMIC for additional information.

TRKOPTS (continued)

Field descriptions

Field	Subfield	Entry	Explanation and action
			Enter FWRLSIND for the release indication to be applied to the outgoing CAS trunk with a forward release. For Italy CAS, this indication is a congestion tone. This option is only valid on FDCP FST trunks. Refer to OPTION=FWRLSIND for additional information. Enter HPCTQ to enable GETS HPC trunk queuing, or enter HPCNOTQ to deny HPC trunk queuing on specific egress trunk groups when the HPC egress queuing feature is enabled on an office-wide basis through office parameter HPC_EGRESS_QUEUING. See the note marked “Attention” under OPTION=HPCTQ or HPCNOTQ and the additional information. Enter ICDS for the Inter-network Call Diversion feature. Refer to OPTION=ICDS for additional information. Enter ICMOG to request metering for an incoming trunk agent. Then enter data in the OPTINFO field. Enter INTL to indicate that the CLLI is for international calls. Enter LDA to define the trunk as a dedicated toll trunk. All calls over this trunk are treated as toll calls. This option is limited to incoming IBN toll trunks. Refer to OPTION=LDC for additional information. Enter LMG to assign a logical meter group (LMG) for PRI trunk group billing. Then enter data in the OPTINFO field. Enter LSPAO to indicate that the traffic on a trunk is dedicated to a specific local service provider account owner and context. Context refers to the leasing arrangement between the account owner and switch owner. Refer to OPTION=LSPAO for additional information.

TRKOPTS (continued)

Field descriptions

Field	Subfield	Entry	Explanation and action
			Enter LSPFE to identify the switch owner on the far end of the trunk. Provision LSPFE when the far-end switch has a different switch owner (SO) value from the switch you are provisioning. A different SO indicates that the switch is from another network. Refer to OPTION=LSPFE for additional information. Enter MCID to register an outgoing access trunk for Malicious Call Identification procedures. This option allows a terminating user to request a log of the CLI for received calls from the network. This option is currently supported for FDCP trunks. Refer to OPTION=MCID for additional information. Enter MWI to register specified PRI trunks for Message Waiting Indication as controlling and/or receiving users. Refer to OPTION=MWI for additional information. Enter NATL_CPC to use Saudi national CPC values on a Saudi trunk. If the OPTION subfield is not datafilled, NIL is displayed. Saudi trunks use international values if NIL is displayed. Refer to OPTION=NATL_CPC for additional information. Enter NETOPTS to assign the network options. Operating company personnel can enter all options on a trunk group. A trunk group can have a maximum of four suboptions. The same tuple cannot have the same suboption more than one time. Refer to OPTION=NETOPTS for additional information. Enter OFFNET_CARRID to assign the Carrier ID of the connected Network. Refer to OPTION=OFFNET_CARRID for additional information. Enter OGMOG to request metering for an outgoing trunk agent. Then enter data in the OPTINFO field.

Field descriptions

Field	Subfield	Entry	Explanation and action
			Enter OSNC to allow OSNC type calls. Refer to OPTION=OSNC for additional information. Enter PRESEL to assign the Preselected Carrier ID to the trunk CLLI specified in subfield CLLI. Refer to OPTION=PRESEL for additional information. Enter RCI to specify the NO_RCI/ALTRTE option for incoming, outgoing, and two-way UK ISUP trunks. Enter REQCLI to trigger a calling line identity (CLI) request on the R2 trunk. Option REQCLI is available for the following outgoing trunk types: IBN two way, outgoing, and primary rate access (PRA) trunks. Enter RINGBACK for the ringing tone to be fed upstream (incoming trunk), by the DMS-100 switch upon receipt of a progress message from an outgoing trunk. This option is only valid on FDCP trunks. Refer to OPTION=RINGBACK for additional information. Enter SLOWREL for trunks that take more than 1.5 s to release. This is the time between the sending of CLF and receipt of RLG. This option is only valid on IBN two-way (IBNT2) and IBN outgoing (IBNTO), FDCP protocol, FST trunks. Refer to OPTION=SLOWREL for additional information. Enter TELETAXE to identify that the trunk can support backward charging information in ITX messages (available on French Telephony User Part (FTUP) trunks). This activity sends charging information during the call to the calling subscriber's switch that performs the billing. This allows the service provider to control the billing of the call. Enter TELETAXE_NOSIG to block backward charging information.

TRKOPTS (continued)

Field descriptions

Field	Subfield	Entry	Explanation and action
			Enter TRTORLS for backward release signal FRLS to be sent to the incoming CAS trunk after treatment time-out. This option is only valid on FDCP trunks. Refer to OPTION=TRTORLS for additional information. Enter TXICD for the Transmit Inhibit Call Diversion feature. Refer to OPTION=TXICD for additional information.

a.The Government Emergency Telecommunications Service (GETS) allows authorized users (from federal, state, and local government, for example) to originate a call with higher probability of completion during periods of national emergency.

OPTINFO datafill

The tables that follow contain the OPTINFO datafill for each option listed under OPTKEY.

OPTION=BCMAP

If the option entry in the key is BCMAP, datafill subfield OPTION and refinements as described in the following table.

Field descriptions OPTION=BCMAP

Field	Subfield	Entry	Explanation and action
OPTINFO	OPTION	BCMAP	Enter BCMAP to set the connection type for outgoing setup messages over BTUP, DASS2, and ETSI ISUP trunks. This option consists of subfields ACCESS_ISDN, ACCESS_NO_ISDN, and ALL.
	ACCESS_ISDN, ACCESS_NON_ISDN, ALL	FORCE_ALL or MAP_VOICE	Enter ACCESS_ISDN to specify that the option applies to ISDN calls incoming over ETSI ISUP, PRI, or BRI. Enter ACCESS_NO_ISDN to specify that the option applies to calls not specified by the ACCESS_ISDN option. • Enter ALL to specify that the option applies to all calls over the trunk.

TRKOPTS (continued)

Field descriptions OPTION=BCMAP

Field	Subfield	Entry	Explanation and action
			If FORCE_ALL has the value: • SPEECH, all outbound calls have a TMR of SPEECH regardless of the received TMR • 3_1KHZ, all outbound calls have a TMR of 3.1KHZ AUDIO regardless of the received TMR If MAP_VOICE has the value: • SPEECH, all outbound calls have a TMR of 3_1KHZ AUDIO if the received TMR has the value SPEECH • 3_1KHZ, all outbound calls have a TMR of SPEECH if the received TMR has the value 3_1KHZ AUDIO

Datafill example

The following example shows sample datafill for table TRKOPTS.

MAP display example for table TRKOPTS, option BCMAP

```
          OPTKEY                    OPTINFO
_____________________________________________________________

KNGA 1020EIBWE BCMAP BCMAP ACCESS_NON_ISDN FORCE_ALL SPEECH
KNGA 1021EIWBE BCMAP BCMAP ALL        MAP_VOICE 3.1KHZ
```

TRKOPTS (continued)

OPTION=BLOCKLNP

If the option entry in the key is BLOCKLNP, datafill subfield OPTION and refinements as described in the following table.

Field descriptions OPTION=BLOCKLNP

Field	Subfield	Entry	Explanation and action
OPTINFO	OPTION	BLOCKLNP	Enter BLOCKLNP to send the call to treatment or default routing. This option consists of subfield BLOCK_CHOICE. ***Note:*** The following ISUP trunk types support BLOCKLNP: T1, IT, T2, and ATC.
	BLOCK_ CHOICE	TREAT or DFLTRT	Enter BLOCK_CHOICE to specify where to send the call. The subfield consists of entries TREAT and DFLTRT. ***Note:*** The operating company decides the type of block for each trunk group. Enter TREAT to send the call to treatment. Enter DFLTRT to send the call to default routing.

Datafill example

The following example shows sample datafill for table TRKOPTS.

MAP display example for table TRKOPTS, option BLOCKLNP

```
        OPTKEY                  OPTINFO
_______________________________________________
ISUPITIC   BLOCKLNP            BLOCKLNP   TREAT
```

OPTION=BWRLSIND

If the option entry in the key is BWRLSIND, datafill subfield OPTION as described in the following table.

Field descriptions OPTION=BWRLSIND

Field	Subfield	Entry	Explanation and action
OPTINFO	OPTION	BWRLSIND	Enter BWRLSIND for a congestion tone with clear back (CLB) release indication to be applied to the outgoing CAS trunk.

Datafill example

The following example shows sample datafill for table TRKOPTS.

MAP display example for table TRKOPTS, option BWRLSIND

```
        OPTKEY                    OPTINFO
_______________________________________________
CAS1    BWRLSIND                  BWRLSIND
```

OPTION=CFWOPT

If the option entry in the key is CFWOPT, datafill subfield OPTION as described in the following table.

Field descriptions OPTION=CFWOPT

Field	Subfield	Entry	Explanation and action
OPTINFO	OPTION	CFWOPT	Enter CFWOPT to make the system substitute the original calling number with the DN that activates the Call Forward feature.

Note: See Supplementary information for CFWOPT-specific error messages.

Datafill example

The following example shows sample datafill for table TRKOPTS.

TRKOPTS (continued)

MAP display example for table TRKOPTS, option CFWOPT

```
          OPTKEY                OPTINFO
_____________________________________________
OGR216A      CFWOPT                CFWOPT
```

OPTION=CGETSNOTQ

If the option entry in the key is CGETSNOTQ, datafill subfield OPTION as described in the following table.

Field descriptions OPTION=CGETSNOTQ

Field	Subfield	Entry	Explanation and action
OPTINFO	OPTION	CGETSNOTQ	CGETSNOTQ allows Carrier GETS queuing to be turned off for selected trunks groups when using office-wide queuing. Note that if the CGETSTQ option is datafilled on the given trunk group, the CGETSNOTQ will not be allowed to be datafilled on that same trunk group. Note also that this option is datafilled for terminating (OG or 2W) trunk groups only.

Datafill example

The following example shows sample datafill for table TRKOPTS.

MAP display example for table TRKOPTS, option CGETSNOTQ

```
                OPTKEY                        OPTINFO
_____________________________________________________
EAN811C6DR01    CGETSNOTQ                    CGETSNOTQ
```

OPTION=CGETSRESP

If the option entry in the key is CGETSRESP, datafill subfield OPTION, and refinement SENDRESP, as described below.

Field descriptions OPTION=CGETSRESP

Field	Subfield	Entry	Explanation and action
OPTINFO	OPTION	CGETSRESP	This option is used to define response operation for a queued CGETS call. It provides trunk group level control, and applies to incoming (IC) and two-way trunks only. Datafill refinement SENDRESP as described below.
	SENDRESP	Y or N	Y is used to activate the sending to the previous office of responses (ACM, or Call Proceeding and Progress messages) - when a Carrier GETS call is queued, but no announcement is provisioned. N is used to deactivate this operation. Refer to section “Option CGETSRESP and office parameter interactions”, below.

Datafill example

The following example shows sample datafill for table TRKOPTS.

MAP display example for table TRKOPTS, option CGETSRESP

```
                OPTKEY                          OPTINFO
_____________________________________________________________

EAN822C5DR02    CGETSRESP                    CGETSRESP Y
```

Option CGETSRESP and office parameter interactions Whether ACM or Call Proceeding and Progress messages are sent depends on the interaction between CGETSRESP and the office parameter

TRKOPTS (continued)

CGETS_RESP_WHEN_NO_ANNC_QUEUING. In the table below, the office parameter is referred to as OPARM.

Option CGETSRESP and OPARM interactions

OPARM = N		OPARM = Y	
CGETSRESP = N	**CGETSRESP = Y**	**CGETSRESP = N**	**CGETSRESP = Y**
Do not send ACM or Call Proceeding and Progress message to the previous office	Send ACM or Call Proceeding and Progress message only for calls queued on the specific trunk group with the CGETSRESP option; otherwise, don't send.	Send ACM or Call Proceeding and Progress message for all calls except those on trunk groups that have the CGETSRESP option datafilled to not send.	Send ACM or Call Proceeding and Progress message for all calls that queue with no announcement. In this case, there is no need to datafill the CGETSRESP option in table TRKGRP.
Note: The datafill described above is ignored when a Carrier GETS call is queued with an announcement.			

OPTION=CGETSTQ

If the option entry in the key is CGETSTQ, datafill subfield OPTION, and refinements, as described below.

Field descriptions OPTION=CGETSTQ

Field	Subfield	Entry	Explanation and action
OPTINFO	OPTION	CGETSTQ	The Government Emergency Telecommunications Service (GETS) allows authorized users to originate a call with higher probability of completion during periods of national emergency. CGETSTQ option activates Carrier GETS Trunk Queuing. CGETSTQ operation is specified through refinements TIMEOUT, MAXCALLS and ANN.
	TIMEOUT	1 - 90 (seconds)	This field specifies how long a call can sit in queue waiting for a trunk group member to become idle.
	MAXCALLS	1 - 256	This field specifies the maximum number of calls that can be queued against a given trunk group.
	ANN	Y or N	This field specifies whether or not an announcement is to be played to the calling party while waiting in the queue.

Field descriptions OPTION=CGETSTQ

Field	Subfield	Entry	Explanation and action
		If entry Y	Refinement ANNC and entry of CLLI specifies the CLLI of the announcement that is to be played to the calling party while in queue.
		If entry N	No announcement is played to the calling party while in queue. Note that in this case sending back ACM or Call Proceeding/Progress will depend on office parameter CGETS_RESP_WHEN_NO_ANNC_QUEUING and/or TRKOPTS option CGETSRESP.

Datafill example

The following example shows sample datafill for table TRKOPTS.

MAP display example for table TRKOPTS, option CGETSTQ

```
                OPTKEY                          OPTINFO
_____________________________________________________________

     EAN835C7DR06     CGETSTQ         CGETSTQ 20 100 Y TONE1
    EAN822C5DR02     CGETSTQ         CGETSTQ 20  90 N
```

OPTION=CITYCODE

If the option entry in the key is CITYCODE, datafill subfield OPTION as described below.

Field descriptions OPTION=CITYCODE

Field	Subfield	Entry	Explanation and action
OPTINFO	OPTION	CITYCODE	Enter CITYCODE to prefix the outgoing calling number for Brazilian calls with a subscriber incoming nature-of-address (NOA).
		00 to 99	Enter two-digit datafill for Brazilian variants only.

Datafill example

The following example shows sample datafill for table TRKOPTS.

TRKOPTS (continued)

MAP display example for table TRKOPTS, option CITYCODE

```
          OPTKEY                    OPTINFO
_____________________________________________________

> BZISUPIE102D CITYCODE CITYCODE 55
```

OPTION=CNAMINGN

If the option entry in the key is CNAMINGN, datafill subfield OPTION as described below.

Field descriptions OPTION=CNAMINGN

Field	Subfield	Entry	Explanation and action
OPTINFO	OPTION	CNAMINGN	Enter CNAMINGN to allow the switch to send the calling name in the GN parameter of ISUP IAM.

Note: See Supplementary information for CNA-specific error messages.

OPTION=CPT

If the option entry in the key is CPT, datafill subfield OPTION as described in the following table.

Field descriptions OPTION=CPT

Field	Subfield	Entry	Explanation and action
OPTINFO	OPTION	CPT	Enter CPT to activate the Call Progress Tone feature. Datafill subfields ON_TONE, ON_TIME, OFF_TIME, and PATTERN.
	ON_TONE	AUDRING_TONE, DIAL_TONE, HI, LO	On tone. This subfield specifies the type of tone that the user receives when the CPT feature is active. • Enter AUDRING_TONE to apply the same tone that the switch uses for audible ringback. • Enter DIAL_TONE to apply the same tone that the switch uses for normal dial tone. • Enter HI to apply the HI tone defined in the market-specific tone set. • Enter LO to apply the LO tone defined in the market-specific tone set.
	ON_TIME	1 to 100	ON_TIME. This subfield specifies the time, in 10 ms units, that the system applies one pulse of the CPT. Enter a value between 1 and 100.
	OFF_TIME	1 to 100	OFF_TIME. This subfield specifies the time, in 10 ms units, between CPT pulses. Enter a value between 1 and 100.
	PATTERN	up to 8 digits of 0's and 1's	PATTERN. This subfield specifies the bit pattern that represents the tone characteristics. 1's indicate the time the system applies the value in subfield ON_TIME. 0's indicate how long the system applies the value in subfield OFF_TIME.

Note: See Supplementary information for CPT-specific error messages.

Datafill example

The following example shows sample datafill for table TRKOPTS.

TRKOPTS (continued)

MAP display example for table TRKOPTS, option CPT

```
        OPTKEY                  OPTINFO
_______________________________________________
OGR216A      CPT            CPT LO 5 5 0101
```

OPTION=CSSCRN

If the option entry in the key is CSSCRN, datafill subfield OPTION as described in the following table.

Field descriptions OPTION=CSSCRN

Field	Subfield	Entry	Explanation and action
OPTINFO	OPTION	CSSCRN	Enter CSSCRN to assign Carrier Selection screening to the trunk CLLI specified in subfield CLLI.
	SCRNTYPE	WHITELIST or BLACKLIST	SCRNTYPE specifies the screening method to be used. Enter WHITELIST to enable whitelist screening (the call is allowed to continue if the CLI lookup in table DNSCRN is successful). Enter BLACKLIST to enable blacklist screening (the call is blocked if the CLI lookup in table DNSCRN is successful).
	ATTRCHK	N, CS, or CIC	ATTRCHK specifies the type of attribute check in table DNSCRN. Enter N to specify no attribute checking applies. In this instance, only the CLI needs to exist in DNSCRN for the screening to apply. Enter CS to ensure the CS attribute in table DNSCRN exists before CLI screening applies. Enter CIC to ensure the Carrier Identification Code (CIC) received in the CSP (or provided with field trunk option PRESEL) matches a CIC in table DNSCRN with the CS attribute.

Field descriptions OPTION=CSSCRN

Field	Subfield	Entry	Explanation and action
	MATCH	PARTIAL or EXACT	MATCH specifies the lookup method in table DNSCRN. Enter PARTIAL to enable partial CLI matching. Only the starting digits of a CLI need to match an entry in table DNSCRN. Enter EXACT to enable exact CLI matching. A CLI has to match an entry in table DNSCRN exactly.
	TRIGGER	CSP or ALL	TRIGGER determines when CSP screening occurs. Enter CSP to screen calls only when a CSP is received. Enter ALL to screen all calls. This can be overridden when a CSP is received.

OPTION=DCF

The DCF option applies to incoming calls that have been forwarded to PRI. The option operates within a node or network-wide for incoming ANSI ISUP or ETSI ISUP calls that terminate on the DMS switch.

Calls can be forwarded from IBN lines, P-phone lines, V5.2 POTS lines, CAS MUX lines, or BRI lines. The DCF option can apply to PRI.

Calls received from ISUP variants that cannot send a redirection indicator cannot be denied. This restriction pertains to ETSI ISUP V1 and BTUP (IUP) protocols.

Calls received by the PRI feature “PRI Partial Reroute” are not intercepted by the DCF option.

If the option entry in the key is DCF, datafill subfield OPTION as described in the following table.

Field descriptions OPTION=DCF

Field	Subfield	Entry	Explanation and action
OPTINFO	OPTION	DCF	Enter DCF if the trunk is to reject call-forwarded calls. Calls that are rejected receive Denied Termination treatment.

Datafill example

The following example shows sample datafill for table TRKOPTS.

TRKOPTS (continued)

MAP display example for table TRKOPTS, option DCF

```
          OPTKEY                OPTINFO
_____________________________________________
TG1R35AA      DCF                 DCF
```

OPTION=DLYFWDXMT

If the option entry in the key is DLYFWDXMT, datafill subfield OPTION as described in the following table.

Field descriptions OPTION=DLYFWDXMT

Field	Subfield	Entry	Explanation and action
OPTINFO	OPTION	DLYFWDXMT	Enter DLYFWDXMT to activate delay of forward transmission.
	TIMEOUT	0,1, 2, 3, 4, or 5	TIMEOUT specifies the maximum time the system will wait for an answer supervision signal before the call is taken down. Entering a timeout value of 0 will prevent the starting of the timeout timer. The forward speech path will be blocked until an answer supervision signal is received or until one of the parties goes onhook. Time is in minutes.

Datafill example

The following example shows sample datafill for table TRKOPTS.

TRKOPTS (continued)

MAP display example for table TRKOPTS, option DLYFWDXMT

```
            OPTKEY                  OPTINFO
_____________________________________________________
PX_MONTREAL    DLYFWDXMT              DLYFWDXMT 1

WARNING: This option will block the forward speech path
until an answer message is returned from the far–end
trunk. If no answer message is received, the forward
speech path is never established.

TUPLE TO BE CHANGED:
PX_MONTREAL DLYFWDXMT DLYFWDXMT 1
ENTER Y TO CONFIRM, N TO REJECT OR E TO EDIT
Y
TUPLE CHANGED
JOURNAL FILE INACTIVE
```

Note: This feature is only supported on trunk types PX, P2, PO, IBN2, IBN0, and PRA. All trunk members must terminate to a LTC or DTC. The exec line-up datafilled in table LTCINV must be DTCEX, DTCFX, FXODTC. For SPM, the exec line-up datafilled in table MNNODE must be SPMEX, SPMFX, FXOSPM.

TRKOPTS (continued)

OPTION=DYNAMIC

If the option entry in the key is DYNAMIC, datafill subfield OPTION as described in the following table.

Field descriptions OPTION=DYNAMIC

Field	Subfield	Entry	Explanation and action
OPTINFO	OPTION	DYNAMIC	The OPTION subfield indicates the name of the option. The DYNAMIC option is used by the TOPS IP feature for dynamic trunks.
	SIGNALING	ISUP, ISUPPLUS, or SIPT See subfields	The method used by the switch to signal to the voice packetizing gateway. ISUP has no subfields SIPT consists of a vector of 3 sub-fields: • DEST_MGCNAME • TPROFILE • ALT_HOST_MGCNAME ISUPPLUS consists of the sub-field CAPABILITY_SET.
	DEST_ MGCNAME	Up to 16 characters	Enter the Media Gateway Controller (MGC) name from table MGCINV.
	TPROFILE	Up to 16 characters	Enter the telephony profile name from table TELEPROF.
	ALT_HOST_ MGCNAME	Up to 16 characters	Enter an alternative Media Gateway Controller (MGC) name.
	CAPABILITY_ SET	1 or 2	For ISUPPLUS, this represents the BICC capability set (CS). If the other switch (other side of the DPT trunk) is unable to support CS2 then datafill CAPABILITY_SET as 1. If the other switch can support CS2 then datafill CAPABILITY_SET as 2.
	SIGNALING_ NETWORK	IP, SS7, or STRK	The network used for call control signaling.
	BEARER_ NETWORK	IP, ATM, or STRK	The network used for the bearer (the voice).
	APPLICATION	OC, POS, DPT, RAS, SIPBCPT, or STRK	The dynamic trunking application name.

Note: See Supplementary information for DYNAMIC-specific error messages.

Datafill examples The following examples show sample datafill for table TRKOPTS.

MAP display example for table TRKOPTS, option DYNAMIC with ISUP signaling

```
                OPTKEY
                                                                  OPTINFO
-------------------------------------------------------------------------
     OFC1VL     DYNAMIC
                                  DYNAMIC ISUP  IP  IP   OC
```

An example of TRKOPTS tuples, with BICC CS1 and BICC CS2, are shown below. BICC1 is a BICC trunk group with CS1 and BICC2 is a BICC trunk group with CS2.

MAP display example for table TRKOPTS, option DYNAMIC with ISUPPLUS (BICC) signaling

```
                OPTKEY
                                                                  OPTINFO
-------------------------------------------------------------------------
     BICC1      DYNAMIC
                                  DYNAMIC ISUPPLUS  SS7  ATM     DPT 1
     BICC2      DYNAMIC
                                  DYNAMIC ISUPPLUS  SS7  ATM     DPT 2
```

OPTION=FWRLSIND

If the option entry in the key is FWRLSIND, datafill subfield OPTION as described in the following table.

Field descriptions OPTION=FWRLSIND

Field	Subfield	Entry	Explanation and action
OPTINFO	OPTION	FWRLSIND	Enter FWRLSIND for a congestion tone with clear forward (CLF) release indication to be applied to the outgoing CAS trunk.

Datafill example

The following example shows sample datafill for table TRKOPTS.

TRKOPTS (continued)

MAP display example for table TRKOPTS, option FWRLSIND

```
        OPTKEY                    OPTINFO
_____________________________________________________
CAS1    FWRLSIND                  FWRLSIND
```

OPTION=HPCTQ or HPCNOTQ

If the option entry in the key is HPCTQ or HPCNOTQ, datafill subfield OPTION as described in the following table.

Attention: The use of HPC Network Capabilities is restricted in the United States and U.S. Territories (Puerto Rico and U.S. Virgin Islands) to National Security/Emergency Preparedness (NS/EP) users authorized by the Office of the Manager, National Communication System (OMNCS). Operating company deployment of these HPC Network Capabilities must be coordinated with the OMNCS at the following address:

Office of the Manager
National Communications System
Attn: GETS Program Office
701 South Courthouse Rd.
Arlington, VA 22204-219
email: gets@ncs.gov

Field descriptions OPTION=HPCTQ or HPCNOTQ

Field	Subfield	Entry	Explanation and action
OPTINFO	OPTION	HPCTQ or HPCNOTQ	The OPTION subfield indicates the name of the option. The HPCTQ option is used to enable HPC trunk queuing. The HPCNOTQ option is used to deny HPC trunk queuing on specific egress trunk groups when the HPC egress queuing feature is enabled on an office-wide basis through office parameter HPC_EGRESS_QUEUING. ***Note:*** The HPCNOTQ option can only be assigned to egress trunk group types P2, PX, or PRA. When an attempt is made to assigned the HPCNOTQ option to a trunk group other than P2, PX, or PRA, an error message is displayed.
	TIMEOUT	1 to 90 seconds	The TIMEOUT subfield indicates the maximum duration a call will be held in the queue.
	MAXCALLS	1 to 256	The MAXCALLS subfield indicates the maximum number of calls that can be queued on the trunk group.

Field descriptions OPTION=HPCTQ or HPCNOTQ

Field	Subfield	Entry	Explanation and action
	PLAYANN	Y or N	PLAYANN is the Play Announcement subfield. Y = play announcement when a call is in the queue. N = do not play announcement when calls are in the queue.
	ANNC	1 to 16 alphanumeric characters	ANNC is the CLLI code of the announcement played when PLAYANN=Y.

Note: See Supplementary information for HPCTQ-specific and HPCNOTQ-specific error messages.

Datafill example

The following example shows sample datafill for table TRKOPTS.

MAP display example for table TRKOPTS, option GETS HPC

```
          OPTKEY                    OPTINFO
_____________________________________________________

ISUP_MTL     HPCTQ            HPCTQ 5 100 Y ANNC1
ISUP_MTL2    HPCTQ              HPCTQ 5 100 N
ISUP_001     PRESEL           PRESEL   33    Y
ISUP_002     OFFNET_CARRID      OFFNET_CARRID   22
PRATRKGP     HPCNOTQ          HPCNOTQ
```

OPTION=ICDS

If the option entry in the key is ICDS, datafill subfield OPTION as described in the following table.

Field descriptions OPTION=ICDS

Field	Subfield	Entry	Explanation and action
OPTINFO	OPTION	ICDS	Enter ICDS and datafill on all outgoing point of interconnect (POI) trunks. Add this option to all incoming I-ISUP and AISUP POI trunks. Option ICDS is valid for outgoing calls on ATUP, AISUP, and I-ISUP trunks to inhibit call diversion. Option ICDS identifies a trunk as a POI trunk.

Note: See Supplementary information for ICDS-specific error messages.

TRKOPTS (continued)

Datafill example

The following example shows sample datafill for table TRKOPTS.

MAP display example for table TRKOPTS, option ICDS

```
        OPTKEY                    OPTINFO
_____________________________________________________
NWMSC      ICDS                    ICDS
```

OPTION=ICMOG or OGMOG

If the option entry in the key is ICMOG or OGMOG, datafill subfield OPTION as described in the following table.

Field descriptions OPTION=ICMOG or OGMOG

Field	Subfield	Entry	Explanation and action
OPTINFO	OPTION	ICMOG	If OPTKEY = ICMOG, enter ICMOG to specify the MOGID on an incoming trunk. Then enter data in the MOGID field.
OPTINFO	OPTION	OGMOG	If OPTKEY = OGMOG, enter OGMOG to specify the MOGID on an outgoing trunk. Then enter data in the MOGID field.
OPTINFO	OPTION	MOGID	Alphanumeric (maximum 16 characters) Metered Originator Group Identifier. Enter the required value. ***Note:*** The MOGID is defined in table MTRMOGS.

Note: The options ICMOG/OGMOG and LMG cannot be provisioned on the same trunk.

Datafill example The following example shows sample datafill for table TRKOPTS.

MAP display example for table TRKOPTS, options ICMOG and OGMOG

```
        OPTKEY                    OPTINFO
_____________________________________________________
ICPRIBA   ICMOG                    ICMOG   MOG2
OCPRIBA   OGMOG                      OGMOG   MOG1
```

OPTION=LDA

If the option entry in the key is LDA, datafill subfield OPTION as described in the following table.

Field descriptions OPTION=LDA

Field	Subfield	Entry	Explanation and action
OPTINFO	OPTION	LDA	LDA (Long Distance Alerting) defines the trunk as a dedicated toll trunk. With LDA active, the switch alerts the subscriber to incoming toll calls by distinctive ringing or distinctive call waiting tones. This option is limited to incoming IBN toll trunks.

Datafill example

The following example shows datafill for defining trunk IC_MAL_R2 as a dedicated toll trunk.

MAP display example for table TRKOPTS, option LDA

```
        OPTKEY                    OPTINFO
_______________________________________________
IC_MAL_R2      LDA      LDA
```

OPTION=LMG

If the option entry in the key is LMG, datafill subfield OPTION as described in the following table.

Field descriptions OPTION=LMG

Field	Subfield	Entry	Explanation and action
OPTINFO	OPTION	LMG	Enter LMG to specify a logical meter group. Then enter data in the LMG_NO field. ***Note:*** The options ICMOG/OGMOG and LMG cannot be provisioned on the same trunk.
	LMG_NO		LMG number. Enter the required numeric value (maximum 12 digits)

Datafill example

The following example shows datafill for option LMG.

TRKOPTS (continued)

MAP display example for table TRKOPTS, option LMG

```
        OPTKEY              OPTINFO
_______________________________________________
TURKPRI01 LMG                 LMG 4711
TURKISUPV2A LMG                 LMG 47121314
```

OPTION=LSPAO

If the option entry in the key is LSPAO, datafill subfield OPTION as described in the following table.

CAUTION

Possibility of incorrect billing records

Once you datafill the LSPAO option, the switch considers all calls that traverse the datafilled trunk group as originating from a DN with that LSPAO option. The LSPAO option identifies the local service provider (LSP) account owner. Provision the LSPAO option only on trunk groups that you intend to dedicate to the traffic from a specific LSP and context. Otherwise, this data can result in incorrect billing records.

Field descriptions OPTION=LSPAO

Field	Subfield	Entry	Explanation and action
OPTINFO	OPTION	LSPAO	Enter LSPAO to provision information about the local service provider account owner. See the preceding cautionary box. The switch uses this information to generate billing records.
	PROVIDER	16 character alphanumeric	Enter a local service provider name already provisioned in table LSPINFO.
	CONTEXT	R, U, or N	Enter R for resold, U for unbundled, or N for native. Context refers to the leasing arrangement between the account owner and switch owner.

Datafill example

The following example shows sample datafill for table TRKOPTS.

MAP display example for table TRKOPTS, option LSPAO

```
OPTKEY      OPTINFO
-------------------------------------------------
LSPAO       LSPAO LECNAME1 R
```

OPTION=LSPFE

If the option entry in the key is LSPFE, enter data in the OPTION subfield as described in the table that follows.

Field descriptions OPTION=LSPFE

Field	Subfield	Entry	Explanation and action
OPTINFO	OPTION	LSPFE	Enter LSPFE to indicate the name of the switch owner on the far end of the trunk. Provision LSPFE when the far-end owner of the switch has a different SO value from the provisioned switch.
	PROVIDER	16 character alphanumeric	Enter a local service provider name already provisioned in table LSPINFO.
	SIGNAL_CONTROL	Y or N	Enter a Y to signal LSPFE forward as the LSPSO where LSPFE represents the switch owner of the originating subscriber. The switch uses this information in the Initial Address Message (IAM) when the LSPSO information is not available. Enter an N to prevent the switch from signaling the LSPFE parameter forward as the LSPSO.

Datafill example

The following example shows sample datafill for table TRKOPTS.

MAP display example for table TRKOPTS, option LSPFE

```
OPTKEY      OPTINFO
-------------------------------------------------
LSPFE       LSPFE CLEC1 Y
```

TRKOPTS (continued)

OPTION=MCID

If the option entry in the key is MCID, datafill subfield OPTION as described in the following table.

Field descriptions OPTION=MCID

Field	Subfield	Entry	Explanation and action
OPTINFO	OPTION	MCID	Enter MCID for malicious call identification to allow a terminating user to request a log of the CLI for received calls from the network.

Note: See Supplementary information for MCID-specific error messages.

Datafill example

The following example shows sample datafill for table TRKOPTS.

MAP display example for table TRKOPTS, option MCID

```
        OPTKEY                  OPTINFO
_______________________________________________
CAS1    MCID                    MCID
```

OPTION=MWI

If the option entry in the key is MWI, datafill subfield OPTION as described in the following table.

Field descriptions OPTION=MWI

Field	Subfield	Entry	Explanation and action
OPTINFO	OPTION	MWI	Enter MWI option to register specified PRI trunks for Message Waiting Indication as controlling and/or receiving users.

Datafill example

The following example shows sample datafill for table TRKOPTS. In the example the MWI is provisioned against the common language location identifiers (CLLI) STEP05PRIN, STEP06PRIN, and STEP07PRIN.

MAP display example for table TRKOPTS, option MWI

```
      OPTKEY              OPTINFO
_____________________________________________________
STEP05PRIN   MWI          MWI control
STEP06PRIN   MWI          MWI receive
STEP05PRIN   MWI          MWI control_and_receive
```

OPTION=NATL_CPC

If the option entry is NATL_CPC, enter data in the subfield OPTION as described in the following table.

Field descriptions OPTION=NATL_CPC

Field	Subfield	Entry	Explanation and action
OPTINFO	OPTION	NATL _CPC	Enter NATL_CPC to use Saudi national CPC values on Saudi trunks. If the CLI is not present in the original setup messaging CLF, assign a different MCID option to the terminating line. The new MCID option starts the INF/INR mapping of the CLI between SAUDI ISUP and the line.

Datafill example

The following example shows sample datafill for the TRKOPTS table.

MAP display example for table TRKOPTS, option NATL_CPC

```
        OPTKEY                OPTINFO
_____________________________________________________
CAS1     NATL_CPC                NATL_CPC
```

TRKOPTS (continued)

OPTION=NETOPTS

If the entry in the key is NETOPTS, enter data in the OPTION subfield as described in the following table.

Field descriptions OPTION=NETOPTS

Field	Subfield	Entry	Explanation and action
OPTINFO	OPTION	NETOPTS	Enter NETOPTS to assign the network options for each trunk. Operating company personnel can enter data for all options on a trunk group. A trunk group can have a maximum of four subgroups. A tuple cannot have the same suboption more than one time.
	INTLOPCLI	maximum of 11 digits	Enter a ten-digit calling line identity (CLI). The DMS-100 switch uses this CLI for outgoing calls on I-ISUP or Ie-ISUP trunks on which operating company personnel entered data. The DMS-100 switch uses this CLI when a CLI is not available in the incoming ISUP initial address message (IAM) and the calling party category (CPC) in the IAM has a value of 'Operator'.
	INTLSUBCLI	maximum of 11 digits	Enter a ten-digit CLI. The DMS-100 switch uses this CLI for outgoing calls on I-ISUP or Ie-ISUP trunks on which operating company personnel entered data. The DMS-100 switch uses this CLI when a CLI is not available in the incoming ISUP IAM and the IAM does not have a value of 'Operator'. For example, the CPC can have a value of 'Subscriber'.
	FORCEINTL	NETOPTS_NIL_OPT_AREA	Enter data for this option to allow national calls to behave as international calls. These calls must terminate to I-ISUP or Ie-ISUP trunks for which operating company personnel have entered data for this option.
	MAXCDPN	0 to 30	Enter data for this option to provide a count of a maximum of 30 digits. The DMS-100 switch uses this value to determine the maximum number of digits to use for the called party number (CDPN) parameter. The DMS-100 switch uses the CDPN parameter for outgoing calls on the I-ISUP or Ie-ISUP trunk which has datafill for this option.

Field descriptions OPTION=NETOPTS

Field	Subfield	Entry	Explanation and action
	POINONNIIF	POINONNIIF	Enter data for the POINONNIIF option to allow the non-NIIF parameters, messages and procedures over the POI trunk. This data controls the generation of unsupported parameters in Address Complete Message (ACM), Call Progress Message (CPG), and Answer Message (ANM) during Call Forward.
	MOLIREQD	MOLIREQD	Enter data for the MOLIREQD option to activate the mechanism of carrying mobile location information on Ie-ISUP.

Note: See Supplementary information for NETOPTS-specific error messages.

Datafill example

The following example shows sample datafill for table TRKOPTS.

MAP display example for table TRKOPTS, option NETOPTS

```
OPTKEY                    OPTINFO
_____________________________________________________

PUBL214IIBWE NETOPTS NETOPTS (INTLOPCLI 2349898)
(FORCEINTL)$
```

TRKOPTS (continued)

OPTION=OFFNET_CARRID

If the option entry in the key is OFFNET_CARRID, datafill subfield OPTION as described in the following table.

Field descriptions OPTION=OFFNET_CARRID

Field	Subfield	Entry	Explanation and action
OPTINFO	OPTION	OFFNET_CARRID	Enter OFFNET_CARRID to assign the Carrier ID of the connected network.
	CARRID	10 to 99, 000 to 099, or 1000 to 9999	CARRID is carrier identification, the two-, three-, or four-digit number representing the operating company. ***Note:*** Values 10 to 99, and 000 to 099 are assigned for the German market.

MAP display examples for table TRKOPTS, option OFFNET_CARRID

```
OPTKEY                    OPTINFO
_____________________________________________________

RUA14ISUPV2LP OFFNET_CARRID   OFFNET_CARRID 88
RUA14ISUPV2LP OFFNET_CARRID   OFFNET_CARRID 099
```

```
OPTKEY                    OPTINFO
_____________________________________________________

AUSTRK03 OFFNET_CARRID    OFFNET_CARRID 1440
AUSTRK04 OFFNET_CARRID    OFFNET_CARRID 1475
```

OPTION=OSNC

If the option entry in the key is OSNC, datafill subfield OPTION as described in the following table.

Field descriptions OPTION=OSNC

Field	Subfield	Entry	Explanation and action
OPTINFO	OPTION	OSNC	Enter OSNC to allow OSNC type calls on the outgoing or two-way ISUP Access to Carrier or ISUP Intertoll trunks.

Datafill example

The following example shows sample datafill for table TRKOPTS.

MAP display example for table TRKOPTS, option OSNC

```
 OPTKEY                        OPTINFO
_____________________________________________________

ISUP2WITEA  OSNC                  OSNC
```

OPTION=PRESEL

If the option entry in the key is PRESEL, datafill subfield OPTION as described in the following table.

Field descriptions OPTION=PRESEL

Field	Subfield	Entry	Explanation and action
OPTINFO	OPTION	PRESEL	Enter PRESEL to assign the Preselected Carrier ID to the trunk CLLI specified in subfield CLLI.

TRKOPTS (continued)

Field descriptions OPTION=PRESEL

Field	Subfield	Entry	Explanation and action
	CARRID	up to a six-digit hexadecimal number for calltype subscriptions	CARRID is a six-digit hexadecimal number representing a calltype subscription as datafilled in table CPSNAME. Up to eight calltype subscriptions are supported. ***Note:*** Values 10 to 99, and 000 to 099 are assigned for the German market.
	OVERRIDE	Y or N	Y enables the use of override numbers. N denies the use of override numbers.

Datafill example

The following example shows sample datafill for table TRKOPTS.

MAP display example for table TRKOPTS, option PRESEL

```
TABLE: TRKOPTS
OPTKEY              OPTINFO
-------------------------------------------------------------
KNGA230PRNWE PRESEL   PRESEL (ALL 123456) (NATL 1345) $ Y
PUBLONMDHBWE PRESEL   PRESEL (ALL B345) (NATL 1345DE) $ Y
```

OPTION=RCI

If the option entry in the key is RCI, datafill subfield OPTION as described in the following table.

Field descriptions OPTION=RCI

Field	Subfield	Entry	Explanation and action
OPT	OPTINFO	RCI	Routing control indicator option for incoming, outgoing, and two-way UK ISUP trunks.
	RCI_TYPE	NO_RCI	Enter NO_RCI to discard the RCI received in the incoming UK ISUP trunk. The outgoing UK ISUP initial address message (IAM) does not include the RCI.
		ALTRTE	Enter ALTRTE to override the alternative routing value in the RCI on incoming, outgoing, and two-way UK ISUP trunks.

OPTION=RINGBACK

If the option entry in the key is RINGBACK, datafill subfield OPTION as described in the following table.

Field descriptions OPTION=RINGBACK

Field	Subfield	Entry	Explanation and action
OPTINFO	OPTION	RINGBACK	Enter RINGBACK for the backwards audible ring tone to be fed upstream (incoming trunk), by the DMS, upon reception of progress message from an outgoing CAS trunk. This option is only valid on FDCP trunks.

Datafill example

The following example shows sample datafill for table TRKOPTS.

MAP display example for table TRKOPTS, option RINGBACK

```
        OPTKEY                    OPTINFO
_______________________________________________
CAS1    RINGBACK                  RINGBACK
```

OPTION=SLOWREL

If the option entry in the key is SLOWREL, datafill subfield OPTION as described in the following table.

Field descriptions OPTION=SLOWREL

Field	Subfield	Entry	Explanation and action
OPTINFO	OPTION	SLOWREL	Enter SLOWREL for slow release of the CAS trunk to ensure that it is not deallocated before RLG is received. A CAS trunk can take up to 30 seconds to send RLG. Use trunks that take more than 1.5 seconds to release. This option is only valid on IBN 2-way (IBNT2) and IBN outgoing (IBNTO), FDCP protocol, FST trunks.

Datafill example

The following example shows sample datafill for table TRKOPTS.

TRKOPTS (continued)

MAP display example for table TRKOPTS, option SLOWREL

```
        OPTKEY                  OPTINFO
_______________________________________________
CAS1    SLOWREL                 SLOWREL
```

OPTION=TRTORLS

If the option entry in the key is TRTORLS, datafill subfield OPTION as described in the following table.

Field descriptions OPTION=TRTORLS

Field	Subfield	Entry	Explanation and action
OPTINFO	OPTION	TRTORLS	Enter TRTORLS for FRLS after a treatment timeout to be sent to the incoming CAS. This option is only valid on FDCP trunks.

Datafill example

The following example shows sample datafill for table TRKOPTS.

MAP display example for table TRKOPTS, option TRTORLS

```
        OPTKEY                  OPTINFO
_______________________________________________
CAS1    TRTORLS                 TRTORLS
```

OPTION=TXICD

If the option entry in the key is TXICD, datafill subfield OPTION as described in the following table.

Field descriptions OPTION=TXICD

Field	Subfield	Entry	Explanation and action
OPTINFO	OPTION	TXICD	Enter TXICD and datafill all outgoing ANSI ISUP trunks that transport the Inhibit Call Diversion calling party category (CPC). Option TXICD allows the transmission of Inhibit Call Diversion across ANSI7+ trunks. Datafill this option only on IBNTO and IBNT2 trunk groups containing ANSI ISUP trunks.

Note: See Supplementary information for TXICD-specific error messages.

Datafill example

The following example shows sample datafill for table TRKOPTS.

MAP display example for table TRKOPTS, option TXICD

```
        OPTKEY                    OPTINFO
_______________________________________________
NWMSC      TXICD                  TXICD
```

Table history

SN06 (DMS)

Added BICC (ISUPPLUS) capability set CS2 for activity 89007299.

UCS18

Added options CGETSTQ, CGETSNOTQ and CGETSRESP for activity 59039429. Added error messages relating to CGETS feature to Supplementary information section.

MMP14

Added option MWI for activity 59017275.

Added options ICMOG and OGMOG for activity 59017822 (ETSI PRI Trunk Metering Provisioning) to allow metering requests for trunk agents.

Added option LMG for activity 59018339 (PRI Trunk Group Billing with DN) to allow the assignment of logical meter groups.

NA013

Added option CNAMINGN for activity 59013088.

Added option DYNAMIC for activity 59007550.

MMP13

Added enhancement to OPTINFO PRESEL option to support eight calltype subscriptions for activity 59012694.

Added field RCI and subfields.

Added options PRESEL and REQCLI for field OPTION for activity 59013577.

Added option DCF to field OPTION for activity 59011983.

TRKOPTS (continued)

Added subfields POINONNIIF and MOLIREQD under option NETOPTS for activity 59013668.

Added option CITYCODE to support activities 59014004 and 60007168.

Added option DFLTPI to support activity 59013159.

MMP12

Added option NATL_CPC for activity 59010190.

Added option NETOPTS for activity 59008417. Added option BCMAP for activity 59008005.

EUR010

Added option INTL for activity AU3275.

Added options TELETAXE and TELETAXE_NOSIG for activity AU3283.

APC010

Added option LDA to subfield OPTION.

EUR009

Added the following options to subfield OPTION:

- CSSCRN
- SLOWREL
- FWRLSIND
- BWRLSIND
- RINGBACK
- TRTORLS
- MCID

For the CSSCRN option, the following subfields are added:

- SCRNTYPE
- ATTRCHK
- MATCH
- TRIGGER

NA011

Added subfield SIGNAL_CONTROL to the OPTINFO field.

NA010

Added the following options to subfield OPTION:

- LSPAO
- LSPFE
- BLOCKLNP

APC009

Added the following options to subfield OPTION:

- CPT
- CFWOPT
- ICDS
- TXICD

EUR008

Adds option PRESEL and OFFNET_CARRID to subfield OPTIONS for IBNT2, IBNTI, IBNTO, and PRA trunks. The OFFNET_CARRID option is not applicable to PRA trunks.

NA008

Introduced table TRKOPTS.

TRKOPTS (continued)

Supplementary information

Error messages

When datafilling table TRKOPTS, the switch can display the following CFWOPT-specific error messages in addition to the DMS table control error messages.

CFWOPT-specific error messages for table TRKOPTS

Message	Description
***WARNING: This option will enable B-party CLI delivery on Call Forwarding features for MISUP and MR2 trunk. It allows CFWOPT option being datafilled against IBNT2 and IBNTO types of trunks. The feature is only available to MISUP and MR2.	This message appears when operating company personnel attempt to change or add a tuple with option CFWOPT. This is a warning message. Verify the trunk is a Malaysia ISDN user part (MISUP) or Malaysia R2 (MR2) trunk.
Must be 2W or OUTGOING trunk in table TRKGRP. Error reported by option CFWOPT.	This message appears when operating company personnel attempt to add option CFWOPT to an incoming trunk. Add option CFWOPT only to a two-way or an outgoing trunk.
CFWOPT is only supported for the following trunk group types: IBNT2, IBNTO. Error reported by option CFWOPT.	This message appears when operating company personnel attempt to add option CFWOPT to trunk types other than IBNT2 and IBNTO. Add option CFWOPT only to IBNT2 and IBNTO trunk types.

When datafilling table TRKOPTS, the switch can display the following CGETS-specific error messages in addition to the DMS table control error messages.

CGETS-specific error messages for table TRKOPTS

Message	Description
`*** ERROR - CGETSTQ option can only be assigned to AXXESS, DAL, EANT, IMT, ONAL, ONAT, and PRA250 trunk types.`	This message is output when trying to add the CGETSTQ option on a trunk group type that is not supported by this feature.
`*** ERROR - Must be 2W or OUTGOING Trunk.`	This message is output when trying to add the CGETSTQ option on an incoming trunk group.
`*** ERROR - CGETSTQ can not be assigned to a trunk group having CGETSNOTQ option.`	This message is output when trying to add the CGETSTQ option to a trunk group that already has the CGETSNOTQ option assigned. These two options are mutually exclusive.
`*** ERROR - CGETSTQ can not be assigned to a trunk group that uses the WIDEBAND SELSEQ in table TRKGRP.`	This message is output when trying to add the CGETSTQ option to a trunk group that has Dialable Wideband Service (DWS). Trunks datafilled with WIDEBAND in the SELSEQ field of table TRKGRP are DWS trunks.
`*** WARNING - The announcement will not be played. Only STND announcement type will be played.`	This message is output when trying to datafill a non-standard announcement into the ANNC field. Table ANNS defines whether an announcement is standard or not.
`*** WARNING - CGETS_OFFICE_QUEUING is ON. CGETSTQ option in table TRKOPTS will have precedence over CGETS_OFFICE_QUEUING parameter in table OFCVAR.`	This message is output when the CGETSTQ option is added to the trunk group and the office queuing parameter is active. In this scenario, the trunk group datafill will take precedence over the office wide datafill.
`*** ERROR - CGETSNOTQ option can only be assigned to AXXESS, DAL, EANT, IMT, ONAL, ONAT, and PRA250 trunk types.`	This message is output when trying to datafill the CGETSNOTQ option on a trunk group type that is not supported by this feature.

TRKOPTS (continued)

CGETS-specific error messages for table TRKOPTS

Message	Description
`*** ERROR - Must be 2W or OUTGOING Trunk.`	This message is output when trying to add the CGETSNOTQ option on an incoming trunk group.
`*** ERROR - CGETSNOTQ can not be assigned to a trunk group having CGETSTQ option.`	This message is output when trying to add the CGETSNOTQ option to a trunk group that already has the CGETSTQ option assigned. These two options are mutually exclusive.
`*** ERROR - CGETSNOTQ can not be assigned to a trunk group that uses the WIDEBAND SELSEQ in table TRKGRP.`	This message is output when trying to add the CGETSNOTQ option to a trunk group that has Dialable Wideband Service (DWS). Trunks datafilled with WIDEBAND in the SELSEQ field of table TRKGRP are DWS trunks.
`*** WARNING - CGETS_OFFICE_QUEUING is ON. CGETSNOTQ option in table TRKOPTS will have precedence over CGETS_OFFICE_QUEUING parameter in table OFCVAR.`	This message is output when the CGETSNOTQ option is added to the trunk group and the office queuing parameter is active. In this scenario, the trunk group datafill will take precedence over the office wide datafill.
`This message is output when trying to datafill the CGETSRESP option on a trunk group type that is not supported by this feature.`	*** ERROR - CGETSRESP option can only be assigned to AXXESS, EANT, IMT, and PRA250 trunk types.
`This message is output when trying to datafill the CGETSRESP on an AXXESS trunk that is not CCS7.`	*** ERROR - CGETSRESP option only supports CCS7 signalling for AXXESS type trunks.
`*** ERROR - CGETSRESP only supports C7UP and ISDN signalling.`	This message is output when trying to datafill the CGETSRESP option on an trunk group that is not CCS7 or ISDN (PRI).
`*** ERROR - CGETSRESP option only supports UCP protocol for C7UP signalling.`	This message is output when trying to datafill the CGETSRESP option on a trunk group that is not using UCP protocol.

CGETS-specific error messages for table TRKOPTS

Message	Description
`*** ERROR - Current GROUP must be datafilled in Table TRKSGRP prior to datafilling CGETSRESP option in table TRKOPTS.`	This message is output when trying to datafill the CGETSRESP option on a trunk group that has not been datafilled in table TRKSGRP yet.
`*** ERROR - Must be INCOMING or 2W Trunk.`	This message is output when trying to add the CGETSRESP option on an outgoing trunk group.
`*** ERROR - CGETSRESP can not be assigned to a trunk group that uses the WIDEBAND SELSEQ in table TRKGRP.`	This message is output when trying to add the CGETSRESP option to a trunk group that has Dialable Wideband Service (DWS). Trunks datafilled with WIDEBAND in the SELSEQ field of table TRKGRP are DWS trunks.

When datafilling table TRKOPTS, the switch can display the following CNAMINGN-specific error messages in addition to the DMS table control error messages.

CNAMINGN-specific error messages for table TRKOPTS

Message	Description
`ERROR - CNAMINGN option can only be assigned to C7UP signaling types.`	Displayed when operating company personnel attempt to add the CNAMINGN option to a non-ISUP trunk.
`ERROR - Must be 2W or OUTGOING trunk.`	Displayed when operating company personnel attempt to add the CNAMINGN option to an incoming ISUP trunk.

TRKOPTS (continued)

CNAMINGN-specific error messages for table TRKOPTS

Message	Description
`ERROR - CNAMINGN option datafilled for this TRKGRP in table TRKOPTS.`	This message appears when the tuple for a particular trunk group is present in the TRKOPTS table and the operating company personnel tries to delete a corresponding tuple in the TRKGRP table.
`ERROR - Incoming trunk not supported by CNAMINGN option in table TRKOPTS.`	This message appears when the tuple for a particular trunk group is present in the TRKOPTS table and the operating company personnel tries to change the direction of the incoming trunk group in the TRKGRP table.

When datafilling table TRKOPTS, the switch can display the following CPT-specific error messages in addition to the DMS table control error messages.

CPT-specific error messages for table TRKOPTS

Message	Description
`***ERROR - Cannot datafill zero length tone pattern`	Displayed if operating company personnel entered a `$' in field PATTERN. A pattern must be entered.
`*** WARNING - This will affect existing R2 calls over this TRKGRP receiving call progress tone`	Displayed if operating company personnel attempt to delete a tuple with option CPT in table TRKOPTS. Deletion of this tuple affects all calls that are routed over this TRKGRP.
`*** ERROR - Must be 2W or OUTGOING Trunk in table TRKGRP`	Displayed when operating company personnel attempt to datafill an incoming trunk with option CPT in table TRKOPTS.
`*** ERROR - CPT option is only allowed for FST trunks`	Displayed when operating company personnel attempt to datafill a trunk that is not FST with option CPT in table TRKOPTS.

CPT-specific error messages for table TRKOPTS

Message	Description
`*** ERROR - CPT option is only allowed for R2 trunks`	Displayed when operating company personnel attempt to datafill a trunk that is not R2 with option CPT in table TRKOPTS.
`*** ERROR - CPT option can only be assigned to IBNT2 and IBNTO trunks`	Displayed when operating company personnel attempt to datafill a trunk that is not an IBN trunk with option CPT in table TRKOPTS.
`*** ERROR - Trunk not datafilled in Table TRKSGRP.` `Datafill Table TRKSGRP with the CLLI first`	Displayed when operating company personnel attempt to datafill a tuple in table TRKOPTS and the trunk CLLI is not datafilled in table TRKSGRP.
`*** ERROR - Cannot change to a Non-IBN / IBNTI Trunk since tuple exists with the CPT option in Table TRKOPTS.` `Delete Tuple from Table TRKOPTS first.`	Displayed when operating company personnel attempt to change a tuple in table TRKGRP from an IBN trunk to a trunk that is not IBN and the trunk exists with option CPT in table TRKOPTS. Delete the tuple in table TRKOPTS with option CPT before you change the corresponding tuple in table TRKGRP.
`CLLI is not in Table TRKGRP`	Displayed when operating company personnel attempt to datafill table TRKOPTS with a CLLI that is not present in table TRKGRP.

TRKOPTS (continued)

CPT-specific error messages for table TRKOPTS

Message	Description
`*** ERROR - Cannot change to an Incoming trunk since tuple exists with the CPT option in Table TRKOPTS.` `Delete Tuple from Table TRKOPTS first.`	Displayed when operating company personnel attempt to change a tuple in table TRKSGRP from outgoing or two-way trunk to an incoming trunk and the trunk is datafilled with option CPT in table TRKOPTS. Delete the tuple in table TRKOPTS with option CPT before you change the corresponding tuple in table TRKSGRP.
`*** ERROR - Cannot change to a Non-R2 trunk since tuple exists with the CPT option in Table TRKOPTS.` `Delete Tuple from Table TRKOPTS first.`	Displayed when operating company personnel attempt to change the datafill of a tuple in table TRKSGRP from an R2 trunk to a trunk that is not R2 and the trunk exists with option CPT in table TRKOPTS. Delete the tuple in table TRKOPTS with option CPT before you change the corresponding tuple in table TRKSGRP.

When datafilling table TRKOPTS, the switch can display the following DYNAMIC-specific error messages in addition to the DMS table control error messages.

DYNAMIC-specific warning and error messages for table TRKOPTS

Message	Description
That dynamic trunking application is not available.	This error message appears when attempting to add a dynamic trunking application whose code is not present in the load. Add an appropriate dynamic trunking application.
Only trunk subgroup 0 can be used in Table TRKSGRP.	The user has added trunk subgroup 1 in Table TRKSGRP. Delete trunk subgroup 1.
Table TRKSGRP does not contain any info for this trunk.	The TRKOPTS DYNAMIC option cannot be assigned until table TRKSGRP is datafilled for the trunk group. Datafill Table TRKSGRP.

DYNAMIC-specific warning and error messages for table TRKOPTS

Message	Description
The DYNAMIC option is only compatible with a TRKSGRP SGRPVAR of C7UP.	The TRKOPTS DYNAMIC option cannot be assigned to trunk subgroups that have a SGRPVAR other than C7UP in Table TRKSGRP. Select another trunk group with the proper SGRPVAR.
The DYNAMIC option is only compatible with a TRKSGRP PROTOCOL of Q764.	The TRKOPTS DYNAMIC option cannot be assigned to trunk subgroups that have a PROTOCOL other than Q764 in Table TRKSGRP. Select another trunk group with the proper PROTOCOL.
The DYNAMIC option is only compatible with a TRKSGRP COTREQ of 0.	The TRKOPTS DYNAMIC option cannot be assigned to trunk subgroups that have a COTREQ other than 0 in Table TRKSGRP. Select another trunk group with the proper COTREQ.
CLLI cannot be datafilled in Table TRKMEM when assigning the DYNAMIC option.	The TRKMEM cannot have any tuples for a CLLI being datafilled in TRKOPTS with the DYNAMIC option. Select another trunk group CLLI that does not already have TRKMEM tuples datafilled.
For OC-IP, the SIGNALING attribute must be ISUP.	The signaling attribute of the DYNAMIC option must be ISUP. Select ISUP as the signaling attribute when datafilling table TRKOPTS.
For OC-IP, the SIGNALING_NETWORK attribute must be IP.	The signaling network attribute of the DYNAMIC option must be IP. Select IP as the signaling network attribute when datafilling table TRKOPTS.
For OC-IP, the BEARER_NETWORK attribute must be IP.	The bearer network attribute of the DYNAMIC option must be IP. Select IP as the bearer network attribute when datafilling Table TRKOPTS.
For OC-IP, the APPLICATION attribute must be OC.	The application attribute of the DYNAMIC option must be OC. Select OC as the application attribute when datafilling Table TRKOPTS.
For OC-IP, the DYNAMIC option can only be assigned to an IT trunk group.	For the OC-IP application, the TRKOPTS DYNAMIC option can only be assigned to trunk groups that have a GRPTYP of IT. Select another trunk group with a GRPTYP of IT.

TRKOPTS (continued)

DYNAMIC-specific warning and error messages for table TRKOPTS

Message	Description
For OC-IP, the DYNAMIC option can only be assigned to an IC or OG trunk group.	For the OC-IP application, the TRKOPTS DYNAMIC option can only be assigned to trunk groups that have a direction of IC or OG. Select another trunk group with a direction of IC or OG.
For OC-IP, no options can be assigned in Table TRKGRP.	For the OC-IP application, the TRKOPTS DYNAMIC option cannot be assigned to trunk groups that have any other options assigned in table TRKGRP. Select another trunk group without any TRKGRP options.
For OC-IP, no options can be assigned in Table TRKSGRP.	For the OC-IP application, the TRKOPTS DYNAMIC option cannot be assigned to trunk groups that have any other options assigned in table TRKSGRP. Select another trunk group without any TRKSGRP options.
For OC-IP, Table ISUPDEST must not contain datafill for this trunk.	For the OC-IP application, no datafill for the trunk is allowed to be in ISUPDEST. Select another trunk group CLLI that does not have any tuple in ISUPDEST.
For OC-IP, associated tuples in Table IPINV need to be deleted first.	When trying to delete an OC-IP tuple from Table TRKOPTS with the DYNAMIC option, you must first remove tuple(s) from IPINV associated with that CLLI. Remove tuple(s) from IPINV associated with the CLLI to be removed from TRKOPTS.
For OC-IP, changes are disallowed; must delete and re-add.	The attributes of an OC-IP DYNAMIC tuple in Table TRKOPTS cannot be changed, nor can an existing DYNAMIC tuple for another application be changed to the OC-IP application. Delete and re-add the desired tuple(s) in Table TRKOPTS.

When datafilling table TRKOPTS, the switch can display the following GETS HPC-specific error messages and warning messages in addition to the DMS table control error messages.

HPC-specific error messages for table TRKOPTS

Message	Description
`The HPCTQ option can only be assigned to TO, T2, IT, ATC, and CELL trunk types.`	An attempt was made to assign option HPCTQ to an unsupported trunk group.
`Must be 2W or OUTGOING trunk.`	An attempt was made to assign option HPCTQ to an incoming trunk.
`The HPCNOTQ option can only be assigned to P2, PX, and PRA trunk types.`	An attempt was made to assign option HPCNOTQ to a trunk group type other than P2, PX, or PRA.
`Must be 2W or OUTGOING trunk.`	An attempt was made to assign option HPCNOTQ to an incoming PX trunk group.

HPC-specific warning messages for table TRKOPTS

Message	Description
The announcement will not be played when the incoming agent is an IT trunk during Call Processing Time.	The HPCTQ option is assigned to an ATC trunk group, and an announcement is specified.
The announcement will not be played. Only STND announcement type will be played.	The HPCTQ option is assigned to a trunk group and the CLLI provided in the announcement subfield is not a standard announcement.

TRKOPTS (continued)

When datafilling table TRKOPTS, the switch can display the following ICDS-specific error messages in addition to the DMS table control error messages.

ICDS-specific error messages for table TRKOPTS

Message	Description
***ERROR - The ICDS option can only be added to ATUP, I-ISUP or AISUP trunks.	Displayed if operating company personnel attempt to add the ICDS option to an IBNTI, IBNT2, or IBNTO trunk that is not an AISUP, I-ISUP, or ATUP trunk.
*** ERROR - The ICDS option can only be assigned to IBNT2, IBNTI and IBNTO trunk types.	Displayed if operating company personnel attempt to add the ICDS option to a non-IBNT2, IBNTI, or IBNTO trunk.
OPTIONS are not the same in key and optinfo fields.	Displayed when the OPTION and OPTINFO fields do not match.

When datafilling table TRKOPTS, the switch can display the following MCID-specific error message may be in addition to the DMS table control error messages.

MCID-specific error message for table TRKOPTS

Message	Description
ERROR - MCID option can only be assigned to IBNTO and IBNT2 trunks.	Displayed if operating company personnel attempt to add the MCID option to a non-IBNT2, or non-IBNTO trunk.

When datafilling table TRKOPTS, the switch can display the following NETOPTS-specific error messages in addition to the DMS table control error messages.

NETOPTS-specific error messages for table TRKOPTS

Message	Description
***WARNING: Option POINONNIIF is only valid for Ie-ISUP and I-ISUP	This message appears if the operating company personnel enter datafill in the POINONNIIF subfield. This warning indicates that option POINONNIIF is only valid for Ie-ISUP and I-ISUP trunks.
***WARNING: Option MOLIREQD is only valid for Ie-ISUP and I-ISUP	This message appears if the operating company personnel enter datafill in the MOLIREQD subfield. This warning indicates that option MOLIREQD is only valid for Ie-ISUP and I-ISUP trunks.

When datafilling table TRKOPTS, the following TXICD specific error messages can be displayed in addition to the DMS table control error messages.

TXICD-specific error messages for table TRKOPTS

Message	Description
***ERROR - The TXICD option may only be added to Q764 trunks.	Displayed if operating company personnel attempt to add the TXICD option to an IBNT2 or IBNTO trunk that is not a Q764 trunk.
*** ERROR - TXICD option can only be assigned to IBNT2, and IBNTO trunk types.	Displayed if operating company personnel attempt to add the TXICD option to a non-IBNT2, or non-IBNTO trunk.

Restrictions

The following conditions and restrictions apply:

- If OVERI option is datafilled it overrides the incoming CLI.
- Provision the LSPFE option on OP, IT, and DA trunk group types only.
- Provision the LSPAO option on the IT trunk group type only.

TRKOPTS (end)

- If you set subfield SIGNAL_CONTROL to Y, you must enter a corresponding value for LSPFE.
- If you use STD signaling in TRKSGRP, the PULSTYP field in TRKSGRP must be MF.
- You cannot provision the CELL option for the IT trunk group type in table TRKGRP.
- Provision the LSPAO option only on IC/2W direction trunk groups.
- SLOWREL is supported in IBN 2-way (IBNT2) and IBN outgoing (IBNTO) trunks.
- SLOWREL is datafilled in table TRKOPTS and is supported only for FDCP protocol and FST trunks.
- FWRLSIND is supported in IBN two-way (IBNT2) and IBN outgoing (IBNTO) trunks.
- FWRLSIND is datafilled in table TRKOPTS and is supported only for FDCP protocol and FST trunks.
- BWRLSIND is supported in IBN two-way (IBNT2) and IBN outgoing (IBNTO) trunks.
- BWRLSIND is datafilled in table TRKOPTS and is supported only for FDCP protocol and FST trunks.
- RINGBACK is supported in IBN two-way (IBNT2) and IBN outgoing (IBNTO) trunks.
- RINGBACK is datafilled in table TRKOPTS and is supported only for FDCP protocol and FST trunks.
- TRTORLS is supported in IBN two-way (IBNT2) and IBN outgoing (IBNTO) trunks.
- TRTORLS is datafilled in table TRKOPTS and is supported only for FDCP protocol and FST trunks.
- MCID is supported in IBN two-way (IBNT2) and IBN outgoing (IBNTO) trunks.
- MCID is datafilled in table TRKOPTS and is supported only for FDCP protocol and FST trunks.

TRKSGRP

Table name

Trunk Subgroup (TRKSGRP) table

Functional description

Table TRKSGRP lists the supplementary information for each subgroup that is assigned to one of the trunk groups listed in table TRKGRP. Input data must be specified for at least one subgroup for each trunk group listed in table TRKGRP, excluding trunk groups that are defined in table TRKSGRP as maintenance (MAINT) group type. No data is required in table TRKSGRP for the MAINT trunk group type.

Memory allocation

Tuples are allocated in blocks of 16, with each tuple consuming 28 bytes:(16 x 28 = 448 bytes)

Datafill sequence and implications

When a tuple is datafilled in table TRKSGRP (or TRKSIG), data integrity is checked to compare EC data obtained from tables TRKSGRP, LTCPSINV, CARRMTC according to the following rules:

- If the value of the CARD field in the corresponding tuple of CARRMTC is NT6X50EC, then no other data checking is executed.
- If the value of the CARD field in the corresponding tuple of CARRMTC is other than NT6X50EC, then the ECSTAT field is TRKSGRP is checked. If ECSTAT is either INTERNAL or INNOTONE, the changes to TRKSGRP are blocked and an error message is generated:

“Inconsistent EC data found between tables TRKSGRP and CARRMTC,"“Please refer CLLI <actual CLLI that caused the inconsistency>"

TRKSGRP (continued)

Field descriptions

The following table describes field names, subfield names, and valid data ranges for table TRKSGRP.

Field descriptions for table TRKSGRP

Field	Subfield or refinement	Entry	Explanation and action
SGRPKEY		CLLI, SGRP	SUBGROUP KEY. Field SGRPKEY is a multiple, consisting of subfields CLLI and SGRP.
	CLLI	valid CLLI datafilled in table CLLI	COMMON LANGUAGE LOCATION IDENTIFIER. Enter the CLLI of the trunk group to which the subgroup belongs.
	SGRP	0, 1	SUBGROUP NUMBER. Enter 0 or 1 for the subgroup number.
CARDCODE		valid PEC	CARD CODE. If the trunk is analog, enter the product engineering code of the trunk. If the trunk is IMT or PBX tie trunk, enter DS1SIG. If the trunk is an FX circuit, enter one of the following: FXOGS, FXOLS, FXSGS, or FXSLS. If the trunk is a R2 trunk, enter P30CAS.
SGRPVAR		STD, DS0TL, STDTL, C7UP, FST, or ISDN	VARIABLE SUBGROUP DATA. Enter one of the following signalling data selectors: STD, DSOTL, STDTL, C7UP, FST or ISDN.
SGRPVAR			VARIABLE SUBGROUP DATA. Refer to the appropriate section for refinement datafill. For example, if you entered STD in the previous field, refer to SGRPVAR=STD for refinement datafill. ***Note:*** There is no refinement datafill when SGRPVAR=DS0TL.

SGRPVAR = STD

The following data is stored in the TRKSGRP table when the value in the field SGRPVAR is STD:

- CLLI of the trunk group to which the subgroup is assigned
- trunk subgroup 0 or 1

- product engineering code of the trunk members assigned to the trunk subgroup
- trunk direction of subgroup: incoming, outgoing, or two-way
- type of pulsing and start dial signal
- overlap outpulsing, if required
- permanent signal, partial dial, interdigital, and trunk guard timing
- maximum number of stop and go signals expected if trunk group is dial pulse intertoll
- whether yield-to-glare is required on a two-way trunk group
- type of ringback signal
- where subgroup has digital echo suppressors, whether full or half operation
- whether subgroup is arranged to switch by satellite
- whether dialing is performed by human or machine

  Note: Some of the trunk groups require specific product engineering codes (PECs). The discrete groups are listed below.

- If the trunk group type is recording, the product engineering code of the trunk circuit must be NT3X06AA.
- If the trunk group is 2-way PBX, NT2X95AA is the product engineering code. Prepare the trunk to receive dial pulse or digitone on all direct outward dial (DOD) calls, so incoming pulse type (field IPULSTYP) specified is ignored by system logic. The outgoing pulse type (field OPULSTYP) can be digitone (DT). This trunk always yields to PBX in glare case, so specify Y for field GLAREYD.

The following list of office parameters defines timing on trunks (for example, wink, delay dial):

- PRE_SND_WKDD_TIME
- SND_WK_TIME
- SND_DD_TIME
- PRE_DIAL_DELAY
- REC_PRE_WK_TIME
- REC_MIN_WK_TIME
- REC_MAX_WK_TIME
- REC_PRE_DD_TIME

TRKSGRP (continued)

- REC_MIN_DD_TIME
- REC_MAX_DD_TIME
- MF_ID_TIME

For information on office parameters, see the *Office Parameters Reference Manual* for your switch.

For trunk selection and compatibility, see the *Trunk Selection and Compatibility Manual*.

The following table describes valid refinement data ranges when SGRPVAR = STD.

Field descriptions-refinements when SGRPVAR=STD

Refinement	Subfield or refinement	Entry	Explanation and action
DIR			DIRECTION. Enter the traffic flow direction.
		IC	Enter IC for incoming traffic, and refer to the DIR=IC section for refinement datafill.
		OG	Enter OG for incoming traffic, and refer to the DIR=IC section for refinement datafill.
		2W	Enter 2W for incoming traffic, and refer to the DIR=IC section for refinement datafill.

DIR = IC

The following table describes valid refinement data ranges when DIR = IC.

Field descriptions-refinements when DIR = IC

Refinement	Subfield or refinement	Entry	Explanation and action
PULSTYP		MF, NP, DT, DP	INCOMING TYPE OF PULSING. If incoming pulsing is required, enter the type of pulsing: dial pulse (DP), digitone (DT), multifrequency (MF), or no pulsing (NP). Enter DT for EANT trunks.
ISTARTSG		IM, DD,WK, XD, GO, GS, LO, LS, SZ	INCOMING START DIAL SIGNAL. If incoming pulse type is DP, DT, or MF, enter the type of start dial signal required: immediate dial (IM), wink (WK), delay dial-on hook idle (DD), delay dial-off hook idle (XD), ground start (GO) (ONAL), ground start (GS) (DAL), loop start (LO) (ONAL), loop start (LS) (DAL), seize protocol (SZ)(ONAL or DAL).
OVLP		N, Y	OVERLAPPED OUTPULSING. This field is not currently used in the UCS DMS-250 switch. Enter N.
PSPDSEIZ		2 to 30	PERMANENT SIGNAL OR PARTIAL DIAL ON SEIZURE TIMING. Enter the time in seconds that the trunk has to wait for reception of the first digit.
PARTDIAL		2 to 30	PARTIAL DIAL TIMING. Enter the time in seconds that the trunk has to wait for reception of each digit, excluding the first.
CCONT		NO	COIN CONTROL. This field is not applicable for UCS DMS-250 switch. Enter NO.
RNGBCK		IB, MW, SX, WK, NO, LN, EI, C6, C7_RING	RINGBACK. If the trunk subgroup is arranged for ringback signal, enter the type of ringback signal required: inband (IB), multiwink (MW), or line number method (LN). Otherwise, enter NO. Ringback signaling is used to collect coins from pay telephones.

TRKSGRP (continued)

Field descriptions-refinements when DIR = IC

Refinement	Subfield or refinement	Entry	Explanation and action
ESUPR		N, H, F	ECHO SUPPRESSOR. This field indicates the location of echo suppressors in relation to the trunk group. Enter full (F) when both echo suppressors are located at the near end of the trunk group. Enter half (H) when an echo suppress or is located at the near and far ends of the trunk group. Enter none (N) if no echo suppresors are used.
SAT		Y or N	SATELLITE. Enter Y when the trunk subgroup is arranged to switch by way of satellite. Otherwise, enter N.
REMBSY		Y or N	REMOTE MAKE BUSY. Enter Y when the trunk subgroup is assigned the remote make busy feature. Otherwise, enter N.
DIALMODE		M or C	DIALMODE. Enter customer (C) when incoming digits originate from a subscriber. Otherwise, enter M to indicate incoming digits are machine produced.
ECSTAT		UNEQ, INTERNAL, EXTERNAL, INNOTONE	ECHO CANCELLATION STATUS. Select entry as follows:
		UNEQ	UNEQ. Enter UNEQ if no echo canceller is equipped on this subgroup.

Field descriptions-refinements when DIR = IC

Refinement	Subfield or refinement	Entry	Explanation and action
		INTERNAL	INTERNAL. Enter INTERNAL when the following conditions exist for a non-data call: • the echo canceller on this trunk subgroup is equipped with NT6X50EC card in the DTC frame • the echo canceller on this trunk subgroup is enabled by call processing ***Note 1:*** This value is not allowed when echo suppressor is enabled. Datafill the NSMATCH and AUTOON refinements. ***Note:*** In SN06, BICC IT trunks may datafill the ECSTAT field to INTERNAL to indicate that ECAN should be requested when interworking with IW SPMs that support ECAN.
	NSMATCH	Y or N	NOISE MATCH CONTROL. Enter Y to turn noise matching on. Enter N to turn noise matching off.
	AUTOON	Y or N	AUTO REENABLE CONTROL. Enter Y to turn auto re-enable on. Enter N to indicate echo canceller is not automatically turned on after 2100 Hz tone control is removed.
		EXTERNAL	EXTERNAL. Indicates the echo canceller is not equipped in the DTC. No call processing is involved.
		INNOTONE	INNOTONE. Indicates internal echo cancellation without 2100 Hz tone control. This value is not allowed when echo suppressor is enabled. Datafill the NSMATCH refinement.
	NSMATCH	Y or N	NOISE MATCH CONTROL. Enter Y to turn noise matching on. Enter N to turn noise matching off.

TRKSGRP (continued)

Field descriptions-refinements when DIR = IC

Refinement	Subfield or refinement	Entry	Explanation and action
OPTION			OPTION. This field is a vector of up to three multiples.
		SPMECIDX	SPMECIDX. See the supplementary TRKSGRP module for spectrum-specific information.

DIR = OG

The following table describes valid refinement data ranges when DIR = OG.

Field descriptions-refinements when DIR = OG

Refinement	Subfield or refinement	Entry	Explanation and action
OPULSTYP		DP, MF, DT, NP	OUTGOING TYPE OF PULSING. If outgoing pulsing is required, enter the type of pulsing: dial pulse (DP), multifrequency (MF), digitone (DT). Enter NP for no pulsing.
OSTARTSG		IM, DD, WK, XD, GO, GS, LO, LS, SX, SZ	OUTGOING START DIAL SIGNAL. If outgoing pulse type is DP, enter the type of dial signal required: immediate dial (IM), wink (WK), delay dial-on-hook idle (DD), delay dial-on-hook idle (XD), ground start (GO) (ONAL), ground start (GS) (DAL), loop start (LS) (DAL), or SZ for DALs and ONALs terminating to PBXs with seize protocol. If OPULSTYP is NP and cardcode is DS1SIG, enter IM.
IDGTIME		0 to 100	INTERDIGITAL TIMING. If the type of pulsing is dial pulse (DP), enter the interdigital timing interval in ten-millisecond intervals. If the type of pulsing is multifrequency (MF), the recommended value to enter is 7 (70 milliseconds). If the type of pulsing is digitone (DT), the recommended value to enter is 6 (60 milliseconds). For NP type of pulsing, enter 0.
NUMSTOPS		0 to 3	NUMBER OF STOP/GOES. If trunk group type is intertoll with DP pulsing, enter the maximum allowable number of stop/go signals. Otherwise, enter 0.

Field descriptions-refinements when DIR = OG

Refinement	Subfield or refinement	Entry	Explanation and action
CCONT		NO	COIN CONTROL. Not applicable for the UCS DMS-250 switch. Enter NO.
RNGBCK		IB, MW, SX, LN, WK, or NO	RINGBACK. If the trunk subgroup is arranged for ringback signal, enter the type of ringback signal required: inband (IB), multiwink (MW), or line number method (LN); otherwise, enter NO. Ringback signaling is used to collect coins from pay telephones.
ESUPR		N, H, F	ECHO SUPPRESSOR. If the trunk subgroup has echo suppressors, enter FULL (F) when both echo suppressors are located at the near end of the trunk group, or enter HALF (H) when an echo suppressor is located at the near and far end of the trunk group. Otherwise, enter NONE (N).
SAT		Y or N	SATELLITE. Enter Y (yes) when the trunk subgroup is arranged to switch by way of satellite. Otherwise, enter N (no).
REMBSY		Y or N	REMOTE MAKE BUSY. Enter Y when trunk subgroup is assigned the remote make busy feature. Otherwise, enter N.
TRKGRDTM		1 to 255	TRUNK GUARD TIMING. Enter the time that must elapse before the trunk, when fundtioning as the terminating agent, is placed in lockout state if the far end does not acknowledge the trunk disconnect. For trunk subgroups with wink, delay dial and immediate dial, the guard time range is 70 milliseconds to 2.25 seconds in ten-millisecond intervals. For trunk subgroups with ground start or loop start, the range is from 1.12 seconds to 36 seconds in 160-millisecond intervals.
ECSTAT			ECHO CANCELLATION STATUS. Select entry as follows:
		UNEQ	UNEQ indicates no echo canceller is equipped on this subgroup.

TRKSGRP (continued)

Field descriptions-refinements when DIR = OG

Refinement	Subfield or refinement	Entry	Explanation and action
		INTERNAL	INTERNAL. Enter INTERNAL when the following conditions exist for a non-data call: • the echo canceller on this trunk subgroup is equipped with NT6X50EC card in the DTC frame • the echo canceller on this trunk subgroup is enabled by call processing ***Note 1:*** This value is not allowed when echo suppressor is enabled. Datafill the NSMATCH and AUTOON refinements. ***Note:*** In SN06, BICC IT trunks may datafill the ECSTAT field to INTERNAL to indicate that ECAN should be requested when interworking with IW SPMs that support ECAN.
	NSMATCH	Y or N	NOISE MATCH CONTROL. Enter Y to turn noise matching on. Enter N to turn noise matching off.
	AUTOON	Y or N	AUTO REENABLE CONTROL. Enter Y to turn auto re-enable on. Enter N to indicate echo canceller is not automatically turned on after 2100 Hz tone control is removed.
		EXTERNAL	EXTERNAL. Indicates the echo canceller is not equipped in the DTC. No call processing is involved.
		INNOTONE	INNOTONE. Indicates internal echo cancellation without 2100 Hz tone control. This value is not allowed when echo suppressor is enabled. Datafill the NSMATCH refinement.
	NSMATCH	Y or N	NOISE MATCH CONTROL. Enter Y to turn noise matching on. Enter N to turn noise matching off.

Field descriptions-refinements when DIR = OG

Refinement	Subfield or refinement	Entry	Explanation and action
OPTION			OPTION. This field is a vector of up to three multiples.
		SPMECIDX	SPMECIDX. See the supplementary TRKSGRP module for spectrum-specific information.

DIR = 2W

The following table describes valid refinement data ranges when DIR = 2W.

Field descriptions-refinements when DIR = 2W

Refinement	Subfield or refinement	Entry	Explanation and action
IPULSTYP		MF, NP, DT, DP	INCOMING TYPE OF PULSING. If incoming pulsing is required, enter the type of pulsing: dial pulse (DP), digitone (DT), multifrequency (MF), or no pulsing (NP). Enter DT for EANT trunks.
ISTARTSG		IM, DD, WK, XD, GO, GS, LO, LS, SZ	INCOMING START DIAL SIGNAL. If incoming pulse type is DP, DT, or MF, enter the type of start dial signal required: immediate dial (IM), wink (WK), delay dial-on hook idle (DD), or delay dial-off hook idle (XD), ground start (GO) (ONAL), ground start (GS) (DAL), loop start (LO) (ONAL), loop start (LS) (DAL), seize protocol (SZ)(ONAL or DAL).
OVLP		N or Y	OVERLAPPED OUTPULSING. Not currently used in the UCS DMS-250 switch. Enter N.
PSPDSEIZ		2 to 30	PERMANENT SIGNAL OR PARTIAL DIAL ON SEIZURE TIMING. Enter the time in seconds that the trunk has to wait for reception of the first digit.
PARTDIAL		2 to 30	PARTIAL DIAL TIMING. Enter the time in seconds that the trunk has to wait for reception of each digit excluding the first.

TRKSGRP (continued)

Field descriptions-refinements when DIR = 2W

Refinement	Subfield or refinement	Entry	Explanation and action
OPULSTYP		DP, MF, DT, NP	OUTGOING TYPE OF PULSING. If outgoing pulsing is required, enter the type of pulsing: dial pulse (DP), multifrequency (MF), digitone (DT). Otherwise, enter NP (no pulsing).
OSTARTSG		IM, DD, WK, XD, GO, GS, LO, LS, SX, SZ	OUTGOING START DIAL SIGNAL. If outgoing pulse type is DP, enter the type of dial signal required, immediate dial (IM), wink (WK), delay dial-on-hook idle (DD), delay dial-on-hook idle (XD), ground start (GO) (ONAL), ground start (GS) (DAL), loop start (LS) (DAL), or SZ for DALs and ONALs terminating to PBXs with seize protocol. If OPULSTYP is NP and cardcode is DS1SIG, enter IM.
IDGTIME		0 to 100	INTERDIGITAL TIMING. If the type of pulsing is dial pulse (DP), enter the interdigital timing interval in ten-millisecond intervals. If the type of pulsing is multifrequency (MF), the recommended value to enter is 7 (70 milliseconds). If the type of pulsing is digitone (DT), the recommended value to enter is 6 (60 milliseconds). If type of pulsing is NP, enter 0.
NUMSTOPS		0 to 3	NUMBER OF STOP/GOES. If trunk group type is intertoll with DP pulsing, enter the maximum allowable number of stop/go signals. Otherwise, enter 0.
GLAREYD		Y or N	YIELD TO GLARE. If the two-way trunk subgroup must yield to glare, enter Y. Otherwise, enter N.
CCONT		NO	COIN CONTROL. Not applicable for the UCS DMS-250 switch, enter NO.
RNGBCK		IB, MW, SX, LN, WK, or NO	RINGBACK. If the trunk subgroup is arranged for ringback signal, enter the type of ringback signal required: inband (IB), multiwink (MW), or line number method (LN). Otherwise, enter NO. Ringback signaling is used to collect coins from pay telephones.

Field descriptions-refinements when DIR = 2W

Refinement	Subfield or refinement	Entry	Explanation and action
ESUPR		F, H, or N	ECHO SUPPRESSOR. If the trunk subgroup has echo suppressors, enter FULL (F) when both echo suppressors are located at the near end of the trunk group, or enter HALF (H) when an echo suppressor is located at the near and far end of the trunk group. Otherwise, enter NONE (N).
SAT		Y or N	SATELLITE. Enter Y (yes) when trunk subgroup is arranged to switch by way of satellite. Otherwise, enter N.
REMBSY		Y or N	REMOTE MAKE BUSY. Enter Y when the trunk subgroup is assigned the remote make-busy feature. Otherwise, enter N.
DIALMODE		C or M	DIALMODE. Enter C when incoming digits originate from a subscriber (customer). Otherwise, enter M to indicate that incoming digits are machine produced.
TRKGRDTM		1 to 255	TRUNK GUARD TIMING. Enter the time in ten-millisecond intervals that must elapse before the trunk is returned to the idle link list after trunk disconnect. For trunk subgroups with wink, delay dial, and immediate dial, the guard time range is 70 milliseconds to 2.25 seconds, in ten-millisecond intervals. For trunk subgroups with ground start or loop start, the range is from 1.12 seconds to 36 seconds, in 160-millisecond intervals.
ECSTAT			ECHO CANCELLATION STATUS. Select entry as follows:
		UNEQ	UNEQ indicates no echo canceller is equipped on this subgroup.

TRKSGRP (continued)

Field descriptions-refinements when DIR = 2W

Refinement	Subfield or refinement	Entry	Explanation and action
		INTERNAL	INTERNAL. Enter INTERNAL when the following conditions exist for a non-data call: • the echo canceller on this trunk subgroup is equipped with NT6X50EC card in the DTC frame • the echo canceller on this trunk subgroup is enabled by call processing ***Note 1:*** This value is not allowed when echo suppressor is enabled. Datafill the NSMATCH and AUTOON refinements. ***Note:*** In SN06, BICC IT trunks may datafill the ECSTAT field to INTERNAL to indicate that ECAN should be requested when interworking with IW SPMs that support ECAN.
	NSMATCH	Y or N	NOISE MATCH CONTROL. Enter Y to turn noise matching on. Enter N to turn noise matching off.
	AUTOON	Y or N	AUTO REENABLE CONTROL. Enter Y to turn auto re-enable on. Enter N to indicate echo canceller is not automatically turned on after 2100 Hz tone control is removed.
		EXTERNAL	EXTERNAL.Indicates the echo canceller is not equipped in the DTC. No call processing is involved.
		INNOTONE	INNOTONE. Indicates internal echo cancellation without 2100 Hz tone control. The INNOTONE value is not allowed when echo suppressor is enabled. Datafill the NSMATCH refinement.
	NSMATCH	Y or N	NOISE MATCH CONTROL. Enter Y to turn noise matching on. Enter N to turn noise matching off.

Field descriptions-refinements when DIR = 2W

Refinement	Subfield or refinement	Entry	Explanation and action
OPTION			OPTION. This field is a vector of up to three multiples.
		SPMECIDX	SPMECIDX. See the supplementary TRKSGRP module for Spectrum-specific information.

SGRPVAR = STDTL

The following table describes valid refinement data ranges when SGRPVAR = STDTL.

Field descriptions-refinements when SGRPVAR = STDTL

Refinement	Subfield or refinement	Entry	Explanation and action
ECSTAT			ECHO CANCELLATION STATUS. Select entry as follows:
		UNEQ	UNEQ. Indicates no echo canceller is equipped on this subgroup.
		INTERNAL	INTERNAL. Enter INTERNAL when the following conditions exist for a non-data call: • the echo canceller on this trunk subgroup is equipped with NT6X50EC card in the DTC frame • the echo canceller on this trunk subgroup is enabled by call processing ***Note 1:*** This value is not allowed when echo suppressor is enabled. Datafill the NSMATCH and AUTOON refinements. ***Note:*** In SN06, BICC IT trunks may datafill the ECSTAT field to INTERNAL to indicate that ECAN should be requested when interworking with IW SPMs that support ECAN.
		EXTERNAL	EXTERNAL. Indicates the echo canceller is not equipped in the DTC. No call processing is involved. Datafill the ECREQD refinement.

TRKSGRP (continued)

Field descriptions-refinements when SGRPVAR = STDTL

Refinement	Subfield or refinement	Entry	Explanation and action
	ECREQD	Y or N	
		INNOTONE	INNOTONE. Indicates internal echo cancellation without 2100 Hz tone control. This value is not allowed when echo suppressor is enabled.
OPTIONS		$	OPTIONS. There are no supported options. Enter $.

SGRPVAR = FST

The following table describes valid refinement data ranges when SGRPVAR = FST.

Field descriptions-refinements when SGRPVAR = FST

Field	Subfield or refinement	Entry	Explanation and action
SAT		Y or N	SATELLITE REQUIRED OR NOT. Enter Y if a satellite is required or N if it is not.
DIALSTART		DELDIAL, IMMEDIATE, WINK, NILTYPE, IMSZA	DIAL START MODE. The entry here determines the dial start mode.
REMBSY		Y or N	REMOTE MAKE BUSY FEATURE ALLOWED OR NOT. If Y is entered, the remote busy feature is allowed.
DIR		IC, OG, 2W	DIRECTION OF TRAFFIC FLOW. IC represents incoming, OG is for outgoing, and 2W is for two-way.
GLAREYD		Y or N	GLARE YIELD. Determines whether the call will yield to oncoming traffic (take itself down) or wait for the oncoming traffic to yield. Only applicable for R2 trunks.
LSSIDX		LSSR2, LSSC1, NIL	LINE SIGNALLING INDEX. Set the INDEX to LSSR2 for R2 trunks.

TRKSGRP (continued)

Field descriptions-refinements when SGRPVAR = FST

Field	Subfield or refinement	Entry	Explanation and action
FSTSIG		R2	SIGNALLING PROTOCOL USED. Set the protocol to R2 for R2 trunks.
RSSIDX		MR2SYS or NIL	INDEX TO TABLE RGSIGSYS. This is the index to the R2 timing parameter in table RGSIGSYS.
TANDEM		EEND or LNK	TANDEMING METHOD USED. Enter EEND for end to end, or LNK for link by link.
PROTIDX		MR2PROT or NIL	INDEX TO TABLE R2PROT. This gives the index to table R2PROT.
TRTMTIDX		MEXTRT or NIL	INDEX TO TABLES TRTMTACT AND ACTTRTMT. This gives the index to treatment and activity mapping tables TRTMTACT and ACTTRTMT.
INCBLDN		Y or N	SET BILLDN ON INCOMING. If this is set, then BILLDN is sent on incoming trunks when there are no CLI digits. If not, no CLI is sent.
OPTION		DIGCOL	DIGIT COLLECTION. If this option is set, the digit analysis tables will be used.
DGNAME		R2COLL, R2RAN, R2REP, R2CONT, R2COL2STP	INDEX TO TABLES DGHEAD AND DGCODE. This field appears only if the option DIGCOL is set. The field contains the index into the digit analysis tables.

TRKSGRP (continued)

SGRPVAR = ISDN

The following table describes valid refinement data ranges when SGRPVAR = ISDN.

Field descriptions-refinements when SGRPVAR = ISDN

Field	Subfield or refinement	Entry	Explanation and action
PSPDSEIZ		2 to 30	PERMANENT SIGNAL OR PARTIAL DIAL ON SEIZURE TIMING. Enter the time in seconds that the trunk has to wait for reception of the first digit. This is used only for inband DTMF digits.
PARTDIAL		2 to 30	PARTIAL DIAL TIMING. Enter the time in seconds that the trunk has to wait for reception of each digit excluding the first. This is only used for inband DTMF digits.
VERSION		87Q931, UNISPEC30	VERSION. This is the version of the protocol.
CRLENGTH		1, 2	CALL REFERENCE LENGTH. This is the number of octets in call reference.
BCHNEG		Y or N	B-CHANNEL NEGOTIATION. This field indicates whether or not B-channel negotiation is allowed.
BCHGLARE		YIELD, STAND	B-CHANNEL GLARE. When B-channel is used simultaneously in setup messages that travel in both directions, this field determines yield or stand. YIELD takes down the call. STAND waits for the other switch to yield.
IFCLASS		USER, NETWORK	This field determines whether the UCS DMS-250 switch functions as the USER or NETWORK. In any PRA connection, one must be the USER and the other is the NETWORK.
CONFIG		PT_PT, PT_MLT_PT	CONFIGURATION. This field determines whether broadcast procedures are used on this interface.
LOCATION		USER, PVTNET, LOCALEO	The location is used when creating CAUSE information elements.

Field descriptions-refinements when SGRPVAR = ISDN

Field	Subfield or refinement	Entry	Explanation and action
SAT		Y or N	SATELLITE. Enter Y when trunk subgroup is arranged to switch by way of satellite. Otherwise, enter N.
ECSTAT			ECHO CANCELLATION STATUS. Select entry as follows:
		UNEQ	UNEQ. Indicates no echo canceller is equipped on this subgroup.
		INTERNAL	INTERNAL. Enter INTERNAL when the following conditions exist for a non-data call: • the echo canceller on this trunk subgroup is equipped with NT6X50EC card in the DTC frame • the echo canceller on this trunk subgroup is enabled by call processing ***Note 1:*** This value is not allowed when echo suppressor is enabled. Datafill the NSMATCH and AUTOON refinements. ***Note:*** In SN06, BICC IT trunks may datafill the ECSTAT field to INTERNAL to indicate that ECAN should be requested when interworking with IW SPMs that support ECAN.
	NSMATCH	Y or N	NOISE MATCH CONTROL. Enter Y to turn noise matching on. Enter N to turn noise matching off.
	AUTOON	Y or N	AUTO REENABLE CONTROL. Enter Y to turn auto re-enable on. Enter N to indicate echo canceller is not automatically turned on after 2100 Hz tone control is removed.
		EXTERNAL	EXTERNAL. Indicates the echo canceller is not equipped in the DTC. No call processing is involved.

TRKSGRP (continued)

Field descriptions-refinements when SGRPVAR = ISDN

Field	Subfield or refinement	Entry	Explanation and action
		INNOTONE	INNOTONE. Indicates internal echo cancellation without 2100 Hz tone control. This value is not allowed when echo suppressor is enabled. Datafill the NSMATCH refinement.
	NSMATCH	Y or N	NOISE MATCH CONTROL. Enter Y to turn noise matching on. Enter N to turn noise matching off.
TRKGRDTM		1 to 255	TRUNK GUARD TIMING. Enter the time in ten-millisecond intervals that must elapse before the trunk is returned to the idle link list after trunk disconnect. For trunk subgroups with wink, delay dial, and immediate dial, the guard time range is 70 milliseconds to 2.25 seconds, in ten-millisecond intervals. For trunk subgroups with ground start or loop start, the range is from 1.12 seconds to 36 seconds, in 160-millisecond intervals.
L1FLAGS		Y or N	Enter Y or N.
PARMNAME		DEFAULT, ATP	PARAMETER NAME. This field is a key into table ISDNPARM for PRI trunks. This field identifies a method other than the default method for handling optional information elements over PRI trunks.
DCHNL		see subfield	Datafill subfield PMTYPE.
	PMTYPE	DTCI, PDTC, LTC, ICP	PMTYPE. see refinements in following sections.
DCHBCKUP		see subfield	Datafill subfield PMTYPE.
	PMTYPE	DTCI, PDTC, LTC, ICP	PMTYPE. see refinements in following sections.

PMTYPE = DTCI

The following table describes valid refinement data ranges when PMTYPE = DTCI.

Field descriptions-refinements when PMTYPE = DTCI

Refinements	Subfield or refinement	Entry	Explanation and action
DTCINO		0 to 511	ISDN DIGITAL TRUNK CONTROLLER NUMBER. This identifies the DTCI number of the D-channel.
DTCICKTNO		0 to 19	ISDN DIGITAL TRUNK CONTROLLER CIRCUIT NUMBER. This is the DS1 span on the DTCI number of the D-channel.
DTCICKTTS		1 to 24	ISDN DIGITAL TRUNK CONTROLLER CIRCUIT TIME SLOT. This is the time slot of the DS1 span used for the D-channel.
DCHRATE		56K, 64K	D-CHANNEL DATA RATE. If the entry in field PMTYPE=DTCI or LTCI, enter the data rate of the D-channel backup: 56K or 64K. The data transmission rate of the carrier (DS1) and that of the D-channel on it should be compatible. If the carrier is datafilled to transmit at 56K, then the entry in field DCHRATE should also be 56K for any D-channel on the carrier.
HDLCTYPE		HDLC, INVHDLC	HIGH LEVEL DATA LINK TYPE. This field specifies how the LTCI sends and/or receives D-channel messages. Enter HDLC for high-level data Link. Enter INVHDLC for inverted high-level data link.

PMTYPE = PDTC

The following table describes valid refinement data ranges when PMTYPE = PDTC.

Field descriptions-refinements when PMTYPE = PDTC

Refinement	Subfield or refinement	Entry	Explanation and action
P30NO		0 to 511	IAC NUMBER. This is the IAC number.
P30CKTNO		0 to 19	IAC CIRCUIT NUMBER. This is the DS1 circuit number.

TRKSGRP (continued)

Field descriptions-refinements when PMTYPE = PDTC

Refinement	Subfield or refinement	Entry	Explanation and action
P30CKTTS		1 to 31	IAC CIRCUIT TIME SLOT. This is the time slot on the IAC DS1 circuit.
DCHRATE		56K, 64K	D-CHANNEL DATA RATE. If the entry in field PMTYPE=DTCI or LTCI, enter the data rate of the D-channel backup: 56K or 64K. The data transmission rate of the carrier (DS-1) and that of the D-channel on it should be compatible. If the carrier is datafilled to transmit at 56K, then the entry in field DCHRATE should also be 56K for any D-channel on the carrier.
HDLCTYPE		HDLC, INVHDLC	HIGH LEVEL DATA LINK TYPE. This field specifies how the LTCI sends and/or receives D-channel messages. Enter HDLC for high-level data Link. Enter INVHDLC for inverted high-level data link.

PMTYPE = LTC

The following table describes valid refinement data ranges when PMTYPE = LTC.

Field descriptions-refinements when PMTYPE = LTC

Refinement	Subfield or refinement	Entry	Explanation and action
LTCNO		0 to 511	ISDN DIGITAL TRUNK CONTROLLER NUMBER. This identifies the DTCI number of the D-channel.
LTCCKTNO		0 to 19	ISDN DIGITAL TRUNK CONTROLLER CIRCUIT NUMBER. This is the DS1 span on the DTCI number of the D-channel.
LTCCKTTS		1 to 24	ISDN DIGITAL TRUNK CONTROLLER CIRCUIT TIME SLOT. This is the time slot of the DS1 span used for the D-channel.

Field descriptions-refinements when PMTYPE = LTC

Refinement	Subfield or refinement	Entry	Explanation and action
DCHRATE		56K, 64K	D-CHANNEL DATA RATE. If the entry in field PMTYPE=DTCI or LTCI, enter the data rate of the D-channel backup: 56K or 64K. The data transmission rate of the carrier (DS-1) and that of the D-channel on it should be compatible. If the carrier is datafilled to transmit at 56K, then the entry in field DCHRATE should also be 56K for any D-channel on the carrier.
HDLCTYPE		HDLC, INVHDLC	HIGH LEVEL DATA LINK TYPE. This field specifies how the LTCI sends and/or receives D-channel messages. Enter HDLC for high-level data Link. Enter INVHDLC for inverted high-level data link.

PMTYPE = ICP

The following table describes valid refinement data ranges when PMTYPE = ICP.

Field descriptions-refinements when PMTYPE = ICP

Refinement	Subfield or refinement	Entry	Explanation and action
ICPNO		0 to 511	ISDN DIGITAL TRUNK CONTROLLER NUMBER. This identifies the DTCI number of the D-channel.
ICPCKTNO		0 to 19	ISDN DIGITAL TRUNK CONTROLLER CIRCUIT NUMBER. This is the DS1 span on the DTCI number of the D-channel.

TRKSGRP (continued)

Field descriptions-refinements when PMTYPE = ICP

Refinement	Subfield or refinement	Entry	Explanation and action
ICPCKTTS		1 to 24	ISDN DIGITAL TRUNK CONTROLLER CIRCUIT TIME SLOT. This is the time slot of the DS1 span used for the D-channel.
DCHRATE		56K, 64K	D-CHANNEL DATA RATE. If the entry in field PMTYPE=DTCI or LTCI, enter the data rate of the D-channel backup: 56K or 64K. The data transmission rate of the carrier (DS-1) and that of the D-channel on it should be compatible. If the carrier is datafilled to transmit at 56K, then the entry in field DCHRATE should also be 56K for any D-channel on the carrier.

SGRPVAR = C7UP

The following table describes valid refinement data ranges when SGRPVAR=C7UP.

Field descriptions-refinements when SGRPVAR = C7UP

Refinement	Subfield or refinement	Entry	Explanation and action
DIR			DIRECTION. Enter the traffic flow direction.
		IC	Enter IC for incoming traffic and refer to the DIR=IC section for refinement datafill.
		OG	Enter OG for incoming traffic and refer to the DIR=IC section for refinement datafill.
		2W	Enter 2W for incoming traffic and refer to the DIR=IC section for refinement datafill.

DIR = IC

The following table describes valid refinement data ranges when DIR = IC.

Field descriptions-refinements when DIR = IC

Refinement	Subfield or refinement	Entry	Explanation and action
ESUPR		N, H, F	ECHO SUPPRESSOR. If the trunk group has echo suppressors, enter H (half) when a half echo suppressor is located at the near end of the trunk group. Enter N (no) when the trunk group has no echo suppressor located at the near end of the trunk group. Enter F (full) when a full echo suppressor is located at the near end of the trunk group. If F is entered, the switch takes no action and is used for administrative purposes only. An entry of F has the same effect as an entry of N (that is, no echo suppressor is inserted in the connection).
SAT		Y or N	SATELLITE. Enter Y if trunk subgroup is arranged to switch by using satellite. Otherwise, enter N.
ECSTAT			ECHO CANCELLATION STATUS. Select entry as follows:
		UNEQ	UNEQ. Indicates no echo canceller is equipped on this subgroup.

TRKSGRP (continued)

Field descriptions-refinements when DIR = IC

Refinement	Subfield or refinement	Entry	Explanation and action
		INTERNAL	INTERNAL. Enter INTERNAL when the following conditions exist for a non-data call: • the echo canceller on this trunk subgroup is equipped with NT6X50EC card in the DTC frame • the echo canceller on this trunk subgroup is enabled by call processing ***Note 1:*** This value is not allowed when echo suppressor is enabled. Datafill the NSMATCH and AUTOON refinements. ***Note 2:*** In SN06, BICC IT trunks may datafill the ECSTAT field to INTERNAL to indicate that ECAN should be requested when interworking with IW SPMs that support ECAN.
	NSMATCH	Y or N	NOISE MATCH CONTROL. Enter Y to turn noise matching on. Enter N to turn noise matching off.
	AUTOON	Y or N	AUTO REENABLE CONTROL. Enter Y to turn auto re-enable on. Enter N to indicate echo canceller is not automatically turned on after 2100 Hz tone control is removed.
		EXTERNAL	EXTERNAL. Indicates the echo canceller is not equipped in the DTC. No call processing is involved.
		INNOTONE	INNOTONE. Indicates internal echo cancellation without 2100 Hz tone control. This value is not allowed when echo suppressor is enabled. Datafill the NSMATCH refinement.
	NSMATCH	Y or N	NOISE MATCH CONTROL. Enter Y to turn noise matching on. Enter N to turn noise matching off.

Field descriptions-refinements when DIR = IC

Refinement	Subfield or refinement	Entry	Explanation and action
ABCNTL		ACTIVEA, NONE	TRANSFER RATE. This field only applies to CCS7 trunks. Entering ACTIVEA indicates A-bit signaling takes place. Entering NONE indicates this field is not used by call processing. This field interworks with the NT6X50EC echo canceller. This field was previously named XFERATE.
PROTOCOL		UCP, Q764, UCS, CCITT	SIGNALING PROTOCOL TYPE. UCP. Enter the signaling protocol type of UCP to provide MSL-100 ISUP connectivity. Enter datafill for the CONTCHK and ADJNODE subfields. Q764. Enter Q.764 for standard ISUP protocol. Enter datafill for the CONTCHK and ADJNODE subfields. UCS. Enter datafill for the CONTCHK and ADJNODE subfields. CCITT. Enter CCITT for international ISUP protocol. Enter datafill for the CONTCHK, ADJNODE, VARIANT and VERSION subfields.

TRKSGRP (continued)

Field descriptions-refinements when DIR = IC

Refinement	Subfield or refinement	Entry	Explanation and action
	CONTCHK		CONTINUITY CHECK. This field determines the type of continuity test performed when such a test is requested. Because analog trunks use separate voice and signalling paths, Nortel recommends you verify the quality of analog trunk voice paths. The voice path on a digital trunk is not a problem, because of internal carrier maintenance. The continuity check is done by connecting a tone and a receiver to the originating end, and causing the tone to loop back at the terminating end. The originating end checks the validity of the tone, and if the tone passes, the voice path is connected. If the tone does not pass, then an attempt on another trunk is made. There are five types of continuity checks: THRL, TLRH, THRH, LOOPAROUND, and 2W2W. The default is THRH. ***Note:*** High tone = 2000 Hz; Low tone = 1780 Hz
		THRL	TRANSMIT HIGH TONE, RECEIVE LOW TONE. This test is used for an outgoing continuity check only, and is only acceptable for outgoing or two-way trunks. It is used only when the far-end switching unit is two-wire.
		TLRH	TRANSMIT LOW TONE, RECEIVE HIGH TONE. This test is used for an outgoing continuity check only, and is acceptable only for outgoing or two-way trunks. It is used only when the far-end switching unit is two-wire. When this option is datafilled on a two-way trunk group and an incoming continuity test is being performed, the trunk monitors for the reception of the high tone before transmitting the low tone.

Field descriptions-refinements when DIR = IC

Refinement	Subfield or refinement	Entry	Explanation and action
		THRH	TRANSMIT HIGH TONE, RECEIVE HIGH TONE. This test is used only for an outgoing four-wire continuity check and is only acceptable for outgoing and two-way trunks. It is used when the far-end switching unit is four-wire. When datafilled for a two-way trunk group, and an incoming continuity test is being performed, the trunk loops the tone. Use when connected to a four-wire switching unit.
		LOOP-AROUND	LOOPAROUND. This test is used for an incoming four-wire continuity check, and is only acceptable for incoming trunks. It is only used when the far-end switching unit is four-wire. This entry indicates that the trunks are looped instead of transmitting their own tones.
	ADJNODE	DMS300, DMSNODE, OTHERNODE, DEXNODE, or NIL	ADJACENT NODE. Enter 1- to 12- characters as the key in table ADJNODE. Table ADJNODE also contains the adjacent node data used for this trunk subgroup. If the reference to table ADJNODE does not apply, enter NIL. ***Note:*** All 2W, IC, and OG CCITT ISUP trunks must reference a tuple in table ADJNODE to determine whether group unblocking messages can be sent to the far-end office.
	VARIANT	V1, V2, V3, V4, V5	VARIATION. This field indentifies the variation of ISUP, if the user part of ISUP is datafilled against the trunk subgroup. VARIANT=V2 indicates a Mexican ISUP variant of CCITT protocol. The VARIANT values V1, V3, V4, and V5 are not currently used. The default value of VARIANT is V1.

TRKSGRP (continued)

Field descriptions-refinements when DIR = IC

Refinement	Subfield or refinement	Entry	Explanation and action
	VERSION	BLUE, ISUP92, MTX_BLUE, MTX_WHITE, AVENTEL, GSM_BLUE, GSM_WHITE, 100_BLUE, 100_WHITE	VERSION. ***Note:*** If this field is datafilled as 100_WHITE, field PRODUCT in the appropriate tuple in table ADJNODE must be datafilled as OTHER.
OPTION			OPTION.
		VACT	VACANT TREATMENT. Enter VACT and datafill the HANDLING refinement.
	HANDLING	SENDRLS, RLSANDLG, GIVETRMT	
		SPMECIDX	SPMECIDX. See the supplementary TRKSGRP module for Spectrum-specific information.
		DEFITC	DEFAULT INFORMATION TRANSFER CAPABILITY. Enter DEFITC and datafill the INFO_TRANSFER_CAPABILITY refinement.
	INFO_ TRANSFER_C APABILITY	SPEECH or 3_1KHZ	INFORMATION TRANSFER CAPABILITY. This field specifies a value that will override the value of office parameter DEFAULT_BEARER_CAPABILITY in table OFCENG. This option can be assigned only to outgoing or two-way ISUP trunks.
TMRNAME		NIL or valid entry datafilled in table C7UPTMR	TIMER NAME. Enter the name, previously datafilled in table C7UPTMR, that is the key to the tuple where the call processing and trunk maintenance timers for the trunk group are found. If the call processing and trunk maintenance datafillable timers are hard-coded, enter NIL. For each entry in this field there must be a corresponding tuple in table C7UPTMR with the same TMRKEY.

DIR = OG

The following table describes valid refinement data ranges when DIR = OG.

Field descriptions-refinements when DIR = OG

Refinement	Subfield or refinement	Entry	Explanation and action
ESUPR		N, H, F	ECHO SUPPRESSOR. If the trunk group has echo suppressors, enter H (half) when a half echo suppressor is located at the near end of the trunk group. Enter N (no) when the trunk group has no echo suppressor located at the near end of the trunk group. Enter F (full) when a full echo suppressor is located at the near end of the trunk group. If F is entered, the switch takes no action and is used for administrative purposes only. An entry of F has the same effect as an entry of N (that is, no echo suppressor is inserted in the connection).
SAT		Y or N	SATELLITE. Enter Y if trunk subgroup is arranged to switch by using satellite. Otherwise, enter N.
ECSTAT			ECHO CANCELLATION STATUS. Select entry as follows:
		UNEQ	UNEQ. Indicates no echo canceller is equipped on this subgroup.
		INTERNAL	INTERNAL. Enter INTERNAL when the following conditions exist for a non-data call: • the echo canceller on this trunk subgroup is equipped with NT6X50EC card in the DTC frame • the echo canceller on this trunk subgroup is enabled by call processing ***Note 1:*** This value is not allowed when echo suppressor is enabled. Datafill the NSMATCH and AUTOON refinements. ***Note 2:*** In SN06, BICC IT trunks may datafill the ECSTAT field to INTERNAL to indicate that ECAN should be requested when interworking with IW SPMs that support ECAN.

TRKSGRP (continued)

Field descriptions-refinements when DIR = OG

Refinement	Subfield or refinement	Entry	Explanation and action
	NSMATCH	Y or N	NOISE MATCH CONTROL. Enter Y to turn noise matching on. Enter N to turn noise matching off.
	AUTOON	Y or N	AUTO REENABLE CONTROL. Enter Y to turn auto re-enable on. Enter N to indicate echo canceller is not automatically turned on after 2100 Hz tone control is removed.
		EXTERNAL	EXTERNAL. Indicates the echo canceller is not equipped in the DTC. No call processing is involved.
		INNOTONE	INNOTONE. Indicates internal echo cancellation without 2100 Hz tone control. This value is not allowed when echo suppressor is enabled. Datafill the NSMATCH refinement.
	NSMATCH	Y or N	NOISE MATCH CONTROL. Enter Y to turn noise matching on. Enter N to turn noise matching off.
ABCNTL		ACTIVEA, NONE	TRANSFER RATE. This field applies to CCS7 trunks only. Entering ACTIVEA indicates A-bit signaling takes place. Entering NONE indicates this field is not used by call processing. This field interworks with the NT6X50EC echo canceller. This field was previously named XFERATE.

Field descriptions-refinements when DIR = OG

Refinement	Subfield or refinement	Entry	Explanation and action
PROTOCOL		UCP, Q764, UCS, CCITT	SIGNALING PROTOCOL TYPE. UCP. Enter the signaling protocol type of UCP to provide MSL-100 ISUP connectivity. Enter datafill for the CONTCHK, COTREQ, and ADJNODE subfields. Q764. Enter Q.764 for standard ISUP protocol. Enter datafill for the CONTCHK, COTREQ, and ADJNODE subfields. UCS. Enter datafill for the CONTCHK, COTREQ, and ADJNODE subfields. CCITT. Enter CCITT for international ISUP protocol. Enter datafill for the CONTCHK, COTREQ, ADJNODE, VARIANT and VERSION subfields.
	CONTCHK		CONTINUITY CHECK. This field determines the type of continuity test performed when such a test is requested. Because analog trunks use separate voice and signalling paths, Nortel recommends you verify the quality of analog trunk voice paths. The voice path on a digital trunk is not a problem, because of internal carrier maintenance. The continuity check is done by connecting a tone and a receiver to the originating end, and causing the tone to loop back at the terminating end. The originating end checks the validity of the tone, and if the tone passes, the voice path is connected. If the tone does not pass, then an attempt on another trunk is made. There are five types of continuity checks: THRL, TLRH, THRH, LOOPAROUND, and 2W2W. The default is THRH. ***Note:*** High tone = 2000 Hz; Low tone = 1780 Hz
		THRL	TRANSMIT HIGH TONE, RECEIVE LOW TONE. This test is used for an outgoing continuity check only, and is only acceptable for outgoing or two-way trunks. It is used only when the far-end switching unit is two-wire.

TRKSGRP (continued)

Field descriptions-refinements when DIR = OG

Refinement	Subfield or refinement	Entry	Explanation and action
		TLRH	TRANSMIT LOW TONE, RECEIVE HIGH TONE. This test is used for an outgoing continuity check only, and is only acceptable for outgoing or two-way trunks. It is used only when the far-end switching unit is two-wire. When this option is datafilled on a two-way trunk group and an incoming continuity test is being performed, the trunk monitors for the reception of the high tone before transmitting the low tone.
		THRH	TRANSMIT HIGH TONE, RECEIVE HIGH TONE. This test is used for an outgoing four-wire continuity check only and is only acceptable for outgoing and two-way trunks. It is used when the far-end switching unit is four-wire. When datafilled for a two-way trunk group, and an incoming continuity test is being performed, the trunk loops the tone. Use when connected to a four-wire switching unit.
		LOOPAROUND	LOOPAROUND. This test is used for an incoming four-wire continuity check, and is only acceptable for incoming trunks. It is only used when the far-end switching unit is four-wire. This entry indicates that the trunks are looped instead of transmitting their own tones.

Field descriptions-refinements when DIR = OG

Refinement	Subfield or refinement	Entry	Explanation and action
	COTREQ	0 to 100	CONTINUITY TEST REQUIRED. You may require continuity tests for a specific percentage of calls handled by each outgoing or two-way trunk in this subgroup. Enter a number that represents the percentage of calls for which you want to require continuity tests. Continuity tests occur during call setup. Where the trunk direction is incoming, leave the field blank. If a continuity test is performed during a call, then a significant time delay is made on the ISUP call (60 ms to 3 seconds). This is due to the delay at the near end waiting for the continuity to pass, and the delay at the far end awaiting the reception of the continuity message. It is therefore suggested that these tests be used for commissioning on a small sampling of the trunks. This field is increased in granularity increments of 1%. Enter the default value 0 to deactivate.
	ADJNODE	DMS300, DMSNODE, OTHERNODE, DEXNODE, or NIL	ADJACENT NODE. Enter 1- to 12- characters as the key in table ADJNODE. Table ADJNODE also contains the adjacent node data used for this trunk subgroup. If the reference to table ADJNODE does not apply, enter NIL. ***Note:*** All 2W, IC, and OG CCITT ISUP trunks must reference a tuple in table ADJNODE to determine whether group unblocking messages can be sent to the far-end office.
	VARIANT	V1, V2, V3, V4, V5	VARIATION. This field indentifies the variation of ISUP, if the user part of ISUP is datafilled against the trunk subgroup. VARIANT=V2 indicates a Mexican ISUP variant of CCITT protocol. The VARIANT values V1, V3, V4, and V5 are not currently used. The default value of VARIANT is V1.

TRKSGRP (continued)

Field descriptions-refinements when DIR = OG

Refinement	Subfield or refinement	Entry	Explanation and action
	VERSION	BLUE, ISUP92, MTX_BLUE, MTX_WHITE, AVENTEL, GSM_BLUE, GSM_WHITE, 100_BLUE, 100_WHITE	VERSION. ***Note:*** If this field is datafilled as 100_WHITE, field PRODUCT in the appropriate tuple in table ADJNODE must be datafilled as OTHER.
OPTION			OPTION.
		VACT	Enter VACT and datafill the HANDLING refinement.
	HANDLING	SENDRLS, RLSANDLG, GIVETRMT	
		SPMECIDX	SPMECIDX. See the supplementary TRKSGRP module for Spectrum-specific information.
		DEFITC	Enter DEFITC and datafill the INFO_TRANSFER_CAPABILITY refinement.
	INFO_ TRANSFER_ CAPABILITY	SPEECH or 3_1KHZ	INFORMATION TRANSFER CAPABILITY. This field specifies a value that will override the value of office parameter DEFAULT_BEARER_CAPABILITY in table OFCENG. This option can be assigned only to outgoing or two-way ISUP trunks.
TMRNAME		NIL or valid entry datafilled in table C7UPTMR	TIMER NAME. Enter the name, previously datafilled in table C7UPTMR, that is the key to the tuple where the call processing and trunk maintenance timers for the trunk group are found. If the call processing and trunk maintenance datafillable timers are hard-coded, enter NIL. For each entry in this field there must be a corresponding tuple in table C7UPTMR with the same TMRKEY.

DIR = 2W

The following table describes valid refinement data ranges when DIR=2W.

Field descriptions-refinements when DIR = 2W

Refinement	Subfield or refinement	Entry	Explanation and action
ESUPR		N, H, F	ECHO SUPPRESSOR. If the trunk group has echo suppressors, enter H (half) when a half echo suppressor is located at the near end of the trunk group. Enter N (no) when the trunk group has no echo suppressor located at the near end of the trunk group. Enter F (full) when a full echo suppressor is located at the near end of the trunk group. If F is entered, the switch takes no action and is used for administrative purposes only. An entry of F has the same effect as an entry of N (that is, no echo suppressor is inserted in the connection).
SAT		Y or N	SATELLITE. Enter Y if trunk subgroup is arranged to switch by using satellite. Otherwise, enter N.
ECSTAT			ECHO CANCELLATION STATUS. Select entry as follows:
		UNEQ	UNEQ. Indicates no echo canceller is equipped on this subgroup.
		INTERNAL	INTERNAL. Enter INTERNAL when the following conditions exist for a non-data call: • the echo canceller on this trunk subgroup is equipped with NT6X50EC card in the DTC frame • the echo canceller on this trunk subgroup is enabled by call processing ***Note 1:*** This value is not allowed when echo suppressor is enabled. Datafill the NSMATCH and AUTOON refinements. ***Note 2:*** In SN06, BICC IT trunks may datafill the ECSTAT field to INTERNAL to indicate that ECAN should be requested when interworking with IW SPMs that support ECAN.

TRKSGRP (continued)

Field descriptions-refinements when DIR = 2W

Refinement	Subfield or refinement	Entry	Explanation and action
	NSMATCH	Y or N	NOISE MATCH CONTROL. Enter Y to turn noise matching on. Enter N to turn noise matching off.
	AUTOON	Y or N	AUTO REENABLE CONTROL. Enter Y to turn auto re-enable on. Enter N to indicate echo canceller is not automatically turned on after 2100 Hz tone control is removed.
		EXTERNAL	EXTERNAL. Indicates the echo canceller is not equipped in the DTC. No call processing is involved.
		INNOTONE	INNOTONE. Indicates internal echo cancellation without 2100 Hz tone control. This value is not allowed when echo suppressor is enabled. Datafill the NSMATCH refinement.
	NSMATCH	Y or N	NOISE MATCH CONTROL. Enter Y to turn noise matching on. Enter N to turn noise matching off.
ABCNTL		ACTIVEA, NONE	TRANSFER RATE. This field applies to CCS7 trunks only. Entering ACTIVEA indicates A-bit signaling takes place. Entering NONE indicates this field is not used by call processing. This field interworks with the NT6X50EC echo canceller. This field was previously named XFERATE.

Field descriptions-refinements when DIR = 2W

Refinement	Subfield or refinement	Entry	Explanation and action
PROTOCOL		UCP, Q764, UCS, CCITT	SIGNALING PROTOCOL TYPE. UCP. Enter the signaling protocol type of UCP to provide MSL-100 ISUP connectivity. Enter datafill for the CONTCHK, COTREQ, and ADJNODE subfields. Q764. Enter Q.764 for standard ISUP protocol. Enter datafill for the CONTCHK, COTREQ, and ADJNODE subfields. UCS. Enter datafill for the CONTCHK, COTREQ, and ADJNODE subfields. CCITT. Enter CCITT for international ISUP protocol. Enter datafill for the CONTCHK, COTREQ, ADJNODE, VARIANT and VERSION subfields.
	CONTCHK		CONTINUITY CHECK. This field determines the type of continuity test performed when such a test is requested. Because analog trunks use separate voice and signalling paths, Nortel recommends you verify the quality of analog trunk voice paths. The voice path on a digital trunk is not a problem, because of internal carrier maintenance. The continuity check is done by connecting a tone and a receiver to the originating end, and causing the tone to loop back at the terminating end. The originating end checks the validity of the tone, and if the tone passes, the voice path is connected. If the tone does not pass, then an attempt on another trunk is made. There are five types of continuity checks: THRL, TLRH, THRH, LOOPAROUND, and 2W2W. The default is THRH. ***Note:*** High tone = 2000 Hz; Low tone = 1780 Hz
		THRL	TRANSMIT HIGH TONE, RECEIVE LOW TONE. This test is used for an outgoing continuity check only, and is only acceptable for outgoing or two-way trunks. It is only used when the far-end switching unit is two-wire.

TRKSGRP (continued)

Field descriptions-refinements when DIR = 2W

Refinement	Subfield or refinement	Entry	Explanation and action
		TLRH	TRANSMIT LOW TONE, RECEIVE HIGH TONE. This test is used for an outgoing continuity check only, and is acceptable for outgoing or two-way trunks only. It is used only when the far-end switching unit is two-wire. When this option is datafilled on a two-way trunk group and an incoming continuity test is being performed, the trunk monitors for the reception of the high tone before transmitting the low tone.
		THRH	TRANSMIT HIGH TONE, RECEIVE HIGH TONE. This test is used for an outgoing four-wire continuity check only and is acceptable for outgoing and two-way trunks only. It is used when the far-end switching unit is four-wire. When datafilled for a two-way trunk, and an incoming continuity test being performed, the trunk loops the tone. Use when connected to a four-wire switching unit.
		LOOPAROUND	LOOPAROUND. This test is used for an incoming four-wire continuity check, and is only acceptable for incoming trunks. It is only used when the far-end switching unit is four-wire. This entry indicates that the trunks are looped instead of transmitting their own tones.

Field descriptions-refinements when DIR = 2W

Refinement	Subfield or refinement	Entry	Explanation and action
	COTREQ	0 to 100	CONTINUITY TEST REQUIRED. You may require continuity tests for a specific percentage of calls handled by each outgoing or two-way trunk in this subgroup. Enter a number that represents the percentage of calls for which you want to require continuity tests. Continuity tests occur during call setup. Where the trunk direction is incoming, leave field blank. If a continuity test is performed during a call, then a significant time delay is made on the ISUP call (60 ms to 3 seconds). This is due to the delay at the near end waiting for the continuity to pass, and the delay at the far end awaiting the reception of the continuity message. It is therefore suggested that these tests be used for commissioning on a small sampling of the trunks. This field is increased in granularity increments of 1%. Enter the default value 0 to deactivate.
	ADJNODE	DMS300, DMSNODE, OTHERNODE, DEXNODE, or NIL	ADJACENT NODE. Enter 1- to 12- characters as the key in table ADJNODE. Table ADJNODE also contains the adjacent node data used for this trunk subgroup. If the reference to table ADJNODE does not apply, enter NIL. ***Note:*** All 2W, IC, and OG CCITT ISUP trunks must reference a tuple in table ADJNODE to determine whether group unblocking messages can be sent to the far-end office.
	VARIANT	V1, V2, V3, V4, V5	VARIATION. This field indentifies the variation of ISUP, if the user part of ISUP is datafilled against the trunk subgroup. VARIANT=V2 indicates a Mexican ISUP variant of CCITT protocol. The VARIANT values V1, V3, V4, and V5 are not currently used. The default value of VARIANT is V1.

TRKSGRP (continued)

Field descriptions-refinements when DIR = 2W

Refinement	Subfield or refinement	Entry	Explanation and action
	VERSION	BLUE, ISUP92, MTX_BLUE, MTX_WHITE, AVENTEL, GSM_BLUE, GSM_WHITE, 100_BLUE, 100_WHITE	VERSION. ***Note:*** If this field is datafilled as 100_WHITE, field PRODUCT in the appropriate tuple in table ADJNODE must be datafilled as OTHER.
OPTION			OPTION.
		VACT	Enter VACT and datafill the HANDLING refinement.
	HANDLING	SENDRLS, RLSANDLG, GIVETRMT	
		SPMECIDX	SPMECIDX. See the supplementary TRKSGRP module for Spectrum-specific information.
		DEFITC	Enter DEFITC and datafill the INFO_TRANSFER_CAPABILITY refinement.
	INFO_ TRANSFER_ CAPABILITY	SPEECH or 3_1KHZ	INFORMATION TRANSFER CAPABILITY. This field specifies a value that will override the value of office parameter DEFAULT_BEARER_CAPABILITY in table OFCENG. This option can be assigned only to outgoing or two-way ISUP trunks.

Field descriptions-refinements when DIR = 2W

Refinement	Subfield or refinement	Entry	Explanation and action
TMRNAME		NIL or valid entry datafilled in table C7UPTMR	TIMER NAME. Enter the name, previously datafilled in table C7UPTMR, that is the key to the tuple where the call processing and trunk maintenance timers for the trunk group are found. If the call processing and trunk maintenance datafillable timers are hard-coded, enter NIL. For each entry in this field there must be a corresponding tuple in table C7UPTMR with the same TMRKEY.
GLARE-TYPE		CIC, SGRPYLD	GLARE TYPE. Enter CIC (circuit identification code), where glare is resolved using circuit identification codes. For example, there are two switches connected with two-way ISUP trunks. When glare occurs, the switch with the higher originating point code is granted control of all the trunks with even-numbered CICs. The switch with the lower originating point code is granted control of all the trunks with odd-numbered CICs.

Datafill example

The following example shows sample datafill for table TRKSGRP.

MAP display example for table TRKSGRP

```
SGRPKEY CARDCODE SGRPVAR SGRPVAR

-------------------------------------------------------------

RCC20PX 0 DS1SIG STD IC DT WK N 11 11 DT WK 5 0 N NO NO N N Y M 160 UNEQ $

RCC0PX 0 DS1SIG STD 2W DT WK N 11 11 DT WK 5 0 N NO NO N N Y M 160 UNEQ $
```

Datafill example

The following example shows sample datafill for table TRKSGRP with a

TRKSGRP (continued)

BICC trunk with ECSTAT set to INTERNAL.

```
>table trksgrp
JOURNAL FILE UNAVAILABLE - DMOS NOT ALLOWED
TABLE: TRKSGRP
>loc bicc_ic 0
>list
           SGRPKEY  CARDCODE
SGRPVAR
                                                                        SGRPVAR
--------------------------------------------------------------------------------
         BICC_IC 0    DS1SIG
   C7UP
2W N N INTERNAL N N NONE Q764 THRH 0 DMSNODE $ NIL CIC
```

Datafill warning

The following example shows the warning for table TRKSGRP if an attempt is made to datafill table TRKSGRP with an IPULSTYP other than DT and ISTARTSG, and other than WK for a PX trunk that has the option NODELAY present.

MAP display of warning for table TRKSGRP

```
WARNING: IPULSTYP DT & ISTARTSG WK required when NODELAY option present.
```

Error messages specific to Carrier GETS

For the Carrier GETS feature, the following messages appears on the MAP (maintenance and administration position) display if the following scenarios occur:

- This message is output when an attempt is made to delete a subgroup from table TRKSGRP that still has an entry in table TRKOPTS:

```
*** ERROR - Must remove CGETSRESP option from
   table TRKOPTS before deletion allowed.
```

- This message is output when an attempt is made to change the protocol on a trunk group in table TRKSGRP that is already datafilled in table TRKOPTS with the CGETSRESP option:

```
*** ERROR - CGETSRESP option in table TRKOPTS only supports UCP
protocol for C7UP signalling
```

- This message is output when an attempt is made to change the signalling type on a trunk group in table TRKSGRP that is already datafilled in table TRKOPTS with the CGETSRESP option:

```
** ERROR - CGETSRESP only supports C7UP and ISDN signalling.
```

Table history

SN06 (DMS)

Updated details of ECSTAT field (feature A89007299).

UCS18

Added details of error messages relating to Carrier GETS feature (lead activity 59039419).

UCS17

New warning message to support option NODELAY is added for table TRKSGRP, (A59033603).

UCS12

Table TRKSGRP was updated for editorial comments.

UCS09

Table TRKSGRP was updated to include a data check for EC datafill information (AX0954).

UCS08

The VERSION subfield for SGRPVAR=C7UP was updated.

TRKSGRP (end)

UCS07

The ITU option was added to the PROTOCOL field. Also, field SGRPVAR was expanded to include FST for R2 trunks.

TRKSGRP type FST

FST

Table TRKSGRP provides the table control required to datafill flexible signaling trunk (FST) trunk subgroups. The new FST trunk subgroup supports a generic R2 signaling system on Meridian Digital Centrex (MDC) trunks. The support applies to IBNTI (incoming), IBNTO (outgoing), and IBNT2 (two-way) trunks.

Datafill

The following table lists the datafill for table TRKSGRP type FST.

Field descriptions (Sheet 1 of 8)

Field	Subfield	Entry	Explanation and action
SGRPKEY		see subfields	*Subgroup key* This field consists of subfields CLLI and SGRP.
	CLLI	alphanumeric (1 to 16 characters)	*Common-language location identifier* Enter the common-language location identifier (CLLI) code that represents the trunk group in table CLLI.
	SGRP	numeric (0 or 1)	*Subgroup number* Enter the number assigned to the trunk subgroup. Enter 1 if two different signaling types are required in the trunk group. Otherwise, enter 0 (zero). The default is 0.
CARDCODE		P30CAS, UK3JOG or UK3JIC	*Card code* Enter P30CAS, UK3JOG, or UK3JIC.
SGRPVAR		see subfield	*Variable subgroup data* This field consists of subfield SIGDATA and subfields SAT, DIALSTRT, REMBSY, DIRSEL, LSSIDX, RSSIDX, A_IDLEPOL, PROTSEL, FSTSIG, RXTXSEP, and OPTIONS.
	SIGDATA	FST	*Signaling data* Enter FST

TRKSGRP type FST (continued)

Field descriptions (Sheet 2 of 8)

Field	Subfield	Entry	Explanation and action
	SAT	Y or N	*Satellite* Enter Y if the trunk subgroup is configured to switch through satellite. Otherwise, enter N.
	DIALSTRT	DELDIAL, IMMEDIATE, IMSZA, NILTYPE, or WINK	*Dial start mode* Enter the type of dial start trunk required: • DELDIAL— delay dial start trunk • IMMEDIATE — immediate dial trunk • IMSZA— immediate-seize-acknowledge dial trunk • WINK— wink start dialing trunk Enter NILTYPE if this field is not applicable. The default is NILTYPE.
	REMBSY	Y or N	*Remote make-busy* Enter Y if trunk subgroup is assigned the Remote Make-Busy (RMB) feature. Otherwise, enter N.
	DIRSEL	see subfield	*Direction selection* This field consists of subfield DIR and subfield GLAREYD (if applicable).
	DIR	IC, OG or 2W	*Direction* Enter the trunk group direction: IC (incoming), OG (outgoing) or 2W (two-way). The entry in this field must be the same as the entry in field DIR for the trunk group datafilled in table TRKGRP. If the trunk group type (field GRPTYP in table TRKGRP) is TPS101, only directions IC or OG can be entered. If the trunk group type is NFA, only 2W can be entered. If the entry in field DIR is 2W, add datafill to field GLAREYD.

TRKSGRP type FST (continued)

Field descriptions (Sheet 3 of 8)

Field	Subfield	Entry	Explanation and action
	GLAREYD	Y or N	*Yield to glare* If the entry in field DIR is 2W, add datafill to this field. Enter Y if the subgroup must yield to glare. Otherwise, enter N.
	LSSIDX	LSSN5 LSSR2 LSSR1 LSSC1 LSSCNB LSSPSB LSS_R1_01 LSS_R1_02 LSS_R1_03 LSS_R1_04 LSS_R1_09 or NIL	*Line signaling index* Enter LSSN5 if N5 line signaling is used on the trunk. Enter LSSR2 if R2 line signaling is used on the trunk. Enter LSSR1 if R1 line signaling is used on the trunk. Enter LSSC1 if C1 line signaling is used on the trunk. Enter LSSCNB for E&M continuous line signaling types. Enter LSSPSB for E&M pulsed line signaling types. Enter LSS_R1_01 if (R1) NTLS01 line signaling is used on the trunk. Enter LSS_R1_02 if (R1) NTLS02 line signaling is used on the trunk. Enter LSS_R1_03 if (R1) NTLS03 line signaling is used on the trunk. Direction field is only OG. Enter LSS_R1_04 if (R1) NTLS04 line signaling is used on the trunk. Direction field is only IC. Enter LSS_R1_09 if (R1) NTLS09 line signaling is used on the trunk. Enter NIL if this field is not applicable.

TRKSGRP type FST (continued)

Field descriptions (Sheet 4 of 8)

Field	Subfield	Entry	Explanation and action
	RSSIDX	alphanumeric (1 to 16 characters) or NIL	*Register signaling index* This field is an index into table RGSIGSYS. Enter an NTRS11 (only when FSTSIG=R2) register signaling system instance of table RGSIGSYS. Enter an MF3 register signaling system instance of table RGSIGSYS for R1 trunks.
	PROTSEL	see subfield	*Protocol selection* This field consists of subfield FSTSIG.
	FSTSIG	R1, R2, N5 or GR1	*Signaling system* Enter R1 if R1 line signaling is used on the trunk. Datafill field RXTXSEP, ANISEL, B_BIT_BLOCK and LNSIGINX. Enter R2 if R2 line signaling is used on the trunk. Add datafill to fields TANDEM, PROTIDX and TRTMTIDX. Enter N5 if N5 line signaling is used on the trunk. Datafill fields N5LNIDX, PTSNMSIG, SZTOPTS, PTSTPST, DISD, ECSTAT, and ECINCL. Enter GR1 if GR1 line signaling (Generic R1) is used on the trunk. Enter datafill for fields RXTXSEP, LNSIGIDX, ANISEL and R1OPTIONS for the GR1 protocol.
	RXTXSEP	Y or N	*Receive transmit path separate* If the entry in subfield FSTSIG is R1 or GR1, add datafill to this field. Enter Y if the four-wire trunk is allowed to separate the receive and transmit lines of the trunk. Enter N if the trunk is two-wire and is not allowed to separate the receive and transmit lines. ***Note:*** This field is used for ARTER test purposes on international R1 trunks. It is also used on trunks that have the entry in field SIGDATA in table TRKSGRP equal to SIGSYS. Continue to add datafill to field OPTIONS.

TRKSGRP type FST (continued)

Field descriptions (Sheet 5 of 8)

Field	Subfield	Entry	Explanation and action
	A_IDLEPOL	0 or 1	*A bit idle polarity.* The A_IDLEPOL field applies to FSTSIG value R1. A_IDLEPOL allows operating company personnel to define the polarity of the A bit in the ABCD IDLE signal. Operating company personnel can define the A bit as either 0 or 1.
	ANISEL	Y or N	*Automatic number identification (ANI).* If the entry in subfield FSTSIG is R1, enter data for this field. This field allows operating company personnel to define the type of ANI signaling for the trunk to use with MF3 register signaling. If the trunk uses ANI signaling, operating company personnel can define the format and the type of the ANI directory number (DN). An entry of Y in this field requires a matching entry in the TRKGRP table.
	R1OPTIONS	MCTOGRLS, MCTICRLS	The MCTOGRLS and MCTICRLS options are only valid for MCT (NTLS09 R1) trunks. These options control how trunks are held and released after MCT activation.
	MCTOGRLS	Y or N	Enter Y in the MCTOGRLS subfield to release the outgoing trunk automatically. Enter N in the MCTOGRLS subfield to release the outgoing trunk using the FRLS maintenance command.
	MCTICRLS	Y or N	Enter Y in the MCTICRLS subfield to release the incoming trunk automatically. Enter N in the MCTICRLS subfield to release the outgoing trunk using the FRLS maintenance command.
	B_BIT_BLOCK	0 or 1	*B bit block.* If the entry in subfield FSTSIG is R1, set the B bit to 0 or 1.

TRKSGRP type FST (continued)

Field descriptions (Sheet 6 of 8)

Field	Subfield	Entry	Explanation and action
	LNSIGIDX	String	*LNSIGSYS index.* If the entry in subfield FSTSIG is R1 or GR1, enter data for this field. This field allows operating company personnel to refer to the key of table LNSIGSYS. The values of this field depend on the tuples in table LNSIGSYS.
	TANDEM	EEND or LNK	*Tandeming method* If the entry in subfield FSTSIG is R2, add datafill to this field. Enter EEND if end-to-end tandeming is used, or LNK if link-by-link tandeming is used.
	PROTIDX	alphanumeric or NIL	*R2 protocol index* If the entry in subfield FSTSIG is R2, add datafill to this field. Enter the R2 register signaling index as described by the command interpreter (CI) command R2VER.
	TRTMTIDX	alphanumeric (4 characters) or NIL	*R2 treatment index* If the entry in subfield FSTSIG is R2, add datafill to this field. Enter the R2 treatment and activity mapping index in tables ACTTRTMT and TRTMTACT.
	N5LNIDX	N5DEF or NIL	*N5 line index* If the entry in subfield FSTSIG is N5, add datafill to this field. Enter N5DEF or NIL.
	PTSNMSIG	numeric (4 to 20)	*Proceed to send to receipt of numeric signal* If the entry in subfield FSTSIG is N5 and the trunk group is incoming or two-way, enter the time, in seconds, between the register seizure and the proceed to send (PTS) signal. Enter the default if the trunk group is incoming. The default is 20.

TRKSGRP type FST (continued)

Field descriptions (Sheet 7 of 8)

Field	Subfield	Entry	Explanation and action
	SZTOPTS	numeric (10 to 20)	*Register seizure to proceed to send* If the entry in subfield FSTSIG is N5 and the trunk group is outgoing or two-way, enter the time, in seconds, between the register seizure (SZ) and the PTS signal. Enter the default if the trunk group is incoming. The default is 20.
	PTSTOST	numeric (20 to 40)	*Proceed to send to signal terminal* If the entry in subfield FSTSIG is N5 and the trunk group is incoming or two-way, enter the time, in seconds, between the PTS signal and the ST signal. Enter the default if the trunk group is outgoing. The default is 20.
	DISD	Y or N	*Discrimination digit* If the entry in subfield FSTSIG is N5, add datafill to this field. Enter Y or N to indicate how the discrimination digit is used.
	ANI_FORMAT	BELL or INTL	*Automatic number identification format.* If the entry in field ANISEL is Y, enter data for the ANI_FORMAT subfield. Operating company personnel can define the format of the ANI signaling for the trunk.
	ANI_DN_SIZE	4 to 10	*Automatic number identification directory number size.* If the entry in subfield ANISEL is Y, enter data for this field. Operating company personnel can define the DN size of the ANI signaling for the trunk.

TRKSGRP type FST (continued)

Field descriptions (Sheet 8 of 8)

Field	Subfield	Entry	Explanation and action
	ECSTAT	EXTERNAL, INNOTONE, INTERNAL, or UNEQ	*Echo canceller status* This field indicates the status of the echo canceller on the trunk subgroup. Enter EXTERNAL if echo cancellations on this trunk subgroup are performed by external echo canceller status equipment, and no call processing control is involved. Enter INNOTONE if internal echo canceller status are to be used for the trunk subgroup, but the use of 2100-Hz tone disabling is turned off. This value is not allowed if the echo suppressor is instrumented on the trunk subgroup. Enter INTERNAL if the echo canceller status on this trunk subgroup are equipped on the NT6X50EC card in the DTC frame, and are enabled by call processing if the call is not a data call. This value is not allowed if echo suppressor is instrumented on the trunk subgroup. Enter UNEQ (unequipped) if echo canceller status is not equipped on this trunk subgroup.
	ECINCL	Y or N	*Echo canceller INCL* If the entry in subfield FSTSIG is N5, add datafill to this field.
	OPTIONS	see subfield	*Options* This field consists of subfield OPTION.
	OPTION	DIGCOL or NIL	*Option* Enter DIGCOL if digit collection analysis is used and add datafill to field DGNAME. Otherwise, enter NIL.
	DGNAME	alphanumeric (up to 8 characters) or NIL	*Digit analysis table index* If the entry in subfield OPTION is DIGCOL, add datafill to this field. This field is an index into table DGHEAD. Enter the detail digit collection information from table DGHEAD.

DIR = IC, 2W or OG, and PROTOCOL = CCITT or Q767

Datafill subfield VARIANT as described in the following table if the entry in field DIR is IC, 2W, or OG, and the entry in field PROTOCOL is CCITT or Q767.

CAUTION
Risk of XPM outage
VARIANT entries V15 to V20 are for future use. Do not use these entries. Use of these entries causes XPM outages.

Field descriptions for conditional datafill

Field	Subfield	Entry	Explanation and action
	VARIANT	BASE, BRAZIL, DEFAULT, DENMARK, GERMANY, FRANCE, MEXICO, PORTUGAL, SPAIN, BELGIUM, ITALY, ISRAEL, PNG, UK, CHILE, COSTA RICA, NORWAY, NEW_ZEALAND, V15, V16, V17, V18, V19, V20, SAUDI, SPIROU, or TURKEY	*Variation* This field is used if the user part of ISUP is datafilled against the trunk subgroup to identify the variation of ISUP. The default is BASE. ***Note 1:*** Entries V15 to V20 are for future use. Do not use these entries. Use of these entries causes XPM outages ***Note 2:*** BRAZIL is used to indicate a Brazilian R2 trunk. .

Datafill examples

An example of datafill if the entry in field DIR is incoming (IC).

TRKSGRP type FST (continued)

MAP display example for table TRKSGRP type FST

```
                SGRPKEY CARDCODE
 SGRPVAR
                                                  SGRPVAR
 ____________________________________________________________
               ICR2NONEBA 0 P30CAS
 FST
  DELDIAL  Y  IC  LSSR2  R2IDX  R2  EEND  MEXR2 MEXTRT
  R2  FSTR2A
```

An example of datafill if the entry in field DIR is outgoing (OG).

MAP display example for table TRKSGRP type FST

```
                SGRPKEY  CARDCODE
 SGRPVAR
                                                  SGRPVAR
 ____________________________________________________________
              OCR2NONEBA 0 P30CAS
 FST
  DELDIAL  Y  OG  NIL  R2IDX  EEND  MEXR2 MEXTRT
```

An example of datafill if the entry in field DIR is two-way (2W).

MAP display example for table TRKSGRP type FST

```
                 SGRPKEY  CARDCODE
 SGRPVAR
                                                  SGRPVAR
 ____________________________________________________________
               2WR2NONEBA 0 P30CAS
 FST
  DELDIAL  Y  2W  Y NIL R2IDX R2 EEND MEXR2 MEXTRT
  DIGCOL  FSTR2A
```

An example of datafill if the entry in field FSTSIG is GR1.

TRKSGRP type FST (end)

MAP display example for table TRKSGRP type FST

```
                                SGRPKEY CARDCODE

SGRPVAR
                                                                                SGRPVAR
 ____________________________________________________________________________________
                               2WR2NONEBA 0 P30CAS
FST

R1INT03OG 0 P30CAS FST N NILTYPE N OG LSSR103 NIL GR1 R1NTLS03 N $ $
R1INT04IC 0 P30CAS FST N NILTYPE N IC LSSR104 R1MF3 GR1 R1INTLS04 N $ $
R1INT09OG 0 P30CAS FST N NILTYPE N OG LSSR109 R1MF3 GR1 R1INTLS09OG N (MCTOGRLS Y) $ $
R1INT09IC 0 P30CAS FST N NILTYPE N OG LSSR109 R1MF3 GR1 R1NTLS09IC N (MCTICRLS Y) $ $
```

An example of datafill for CCITT protocol with field VARIANT.

MAP display example for table TRKSGRP type FST

```
                            SGRPKEY CARDCODE
SGRPVAR                                                                    SGRPVAR
 ____________________________________________________________________________________
                           2WR2NONEBA 0 P30CAS
FST
  BZDR22DIGAAC 0 P30CAS FST N IMMEDIATE N 2W N LSSCNB BR2SYS R2 LNK
  BRR2PROT BRATRT N N BRAZIL (DIGCOL R2C2STP) $

  BZDR22DIGAAC 0 P30CAS FST N IMMEDIATE N 2W N LSSPSB BR2SYS R2 LNK
  BRR2PROT BRATRT N N BRAZIL (DIGCOL R2C2STP) $
```

Table history

MMP13

Added values BRAZIL and DEFAULT to subfield VARIANT to support activity 59014280.

TRKSGRP type TUP

TUP

If the type of signaling is telephone user part (TUP) on trunk group types IBNTI, IBNTO, and IBNT2 as datafilled in table TRKGRP, datafill table TRKSGRP as described in the following datafill table.

Datafill

The following table lists the datafill for table TRKSGRP type TUP.

Field descriptions (Sheet 1 of 2)

Field	Subfield	Entry	Explanation and action
SGRPKEY		see subfields	*Subgroup key* This field consists of subfields CLLI and SGRP.
	CLLI	alphanumeric (1 to 16 characters)	*Common language location identifier* Enter the common language location identifier (CLLI) code that is assigned in table CLLI to the trunk group to which the subgroup belongs.
	SGRP	numeric (0 or 1)	*Subgroup number* Enter the number assigned to the trunk subgroup.
CARDCODE		DS1SIG	*Card code* Enter DS1SIG.
SGRPVAR		see subfield	*Variable subgroup data* This field consists of subfield SIGDATA and refinements DIR, IPULSTYP, OPULSTYP, ESUPR, SAT, ECSTAT, PROTOCOL, CBI, ALTRTE, and TMRNAME.

TRKSGRP type TUP (continued)

Field descriptions (Sheet 2 of 2)

Field	Subfield	Entry	Explanation and action
	SIGDATA	TUP	*Signaling data* Enter TUP for the United Kingdom national variant of the Common Channel Signaling 7 ISDN user part type trunks.
	DIR	2W, IC, or OG	*Direction* Enter the trunk group direction: 2W (two-way), IC (incoming), or OG (outgoing). If the entry in field DIR is 2W, datafill subfields IPULSTYP, ESUPR, SAT, ECSTAT, PROTOCOL, CBI, ALTRTE, TMRNAME, OVLP, GLAREVAR, RCGLI, and OPTIONS as described below. If the entry in field DIR is IC, datafill subfields IPULSTYP, ESUPR, SAT, ECSTAT, PROTOCOL, ALTRTE, TMRNAME, and RCGLI. If the entry in field DIR is OG, datafill subfields OPULSTYP, ESUPR, SAT, ECSTAT, PROTOCOL, CBI, ALTRTE, TMRNAME, OVLP, and OPTIONS.

TRKSGRP type TUP (continued)

DIR = 2W

If the entry in field DIR is 2W, datafill subfields IPULSTYP, ESUPR, SAT, ECSTAT, PROTOCOL, CBI, ALTRTE, TMRNAME, OVLP, GLAREVAR, RCGLI, and OPTIONS as described below.

Field descriptions for conditional datafill (Sheet 1 of 4)

Field	Subfield	Entry	Explanation and action
	IPULSTYP	SS7	*Incoming type of pulsing* Enter SS7.
	ESUPR	F, H, or N	*Echo suppressor* Enter F (full) if a full echo suppressor is located at the near end of the trunk group. The switch takes no action and is used for administrative purposes only. No echo suppressor is inserted in the connection. Enter H (half) if the trunk group has echo suppressors and a half echo suppressor is located at the near end of the trunk group. Enter N (no) if the trunk group has no echo suppressors located at the near end of the trunk group. The default value is N.
	SAT	Y, N, or NIL	*Satellite* Enter Y (yes), if the trunk subgroup is configured to switch through satellite. Otherwise, enter N (no). Enter NIL if the call processing and trunk maintenance datafillable timers are hard coded. Table C7UPTMR is not datafilled for this trunk.

Field descriptions for conditional datafill (Sheet 2 of 4)

Field	Subfield	Entry	Explanation and action
	ECSTAT	EXTERNAL INNOTONE INTERNAL or UNEQ	*Echo canceller status* This field indicates the status of the echo canceller on the trunk subgroup. Enter EXTERNAL if echo cancellations on this trunk subgroup are performed by external echo canceller status equipment, and no call processing control is involved. Enter INNOTONE if internal echo canceller status are to be used for the trunk subgroup, but the use of 2100-Hz tone disabling is turned off. This value is not allowed if the echo suppressor is instrumented on the trunk subgroup. Enter INTERNAL if the echo canceller status on this trunk subgroup are equipped on the NT6X50EC card in the digital trunk controller (DTC) frame, and are enabled by call processing if the call is not a data call. This value is not allowed if echo suppressor is instrumented on the trunk subgroup. Enter UNEQ (unequipped) if echo canceller status is not equipped on this trunk subgroup.
	PROTOCOL	BTUP MBTUP or UCP	*Signaling protocol type* Enter BTUP if the protocol is for the United Kingdom variant of the national user part. Enter MBTUP if the protocol is for United Kingdom variant of the national user part used within a UK market specific network. Enter UCP to provide ISDN user part (ISUP) connectivity between the DMS-250 and the MSL-100 switching units.
	CBI	Y or N	*Cross border indicator* Enter Y if the call is traversing the boundary between two networks. Otherwise, enter N.

TRKSGRP type TUP (continued)

Field descriptions for conditional datafill (Sheet 3 of 4)

Field	Subfield	Entry	Explanation and action
	ALTRTE	Y or N	*Alternate routing* This field determines whether routing control indicator (RCI) override is in effect. To specify that RCI override is operative, enter Y (yes). Otherwise, enter N (no).
	TMRNAME	alphanumeric (1 to 16 characters) or NIL	*Timer name* Enter the timer name, previously datafilled in table C7UPTMR, that is the key to the tuple where the call processing and trunk maintenance timers for the trunk group are found.
	OVLP	Y or N	*Overlap outpulsing* Enter Y if trunk-to-trunk overlap outpulsing is required. Otherwise, enter N.
	GLAREVAR	see subfield	*Variable glare control data* This field consists of subfield GLARETYP.
	GLARETYP	CIC or SGRPYLD	*Glare type* Enter CIC (circuit identification code) if glare is resolved using CICs. For example, given two switching units connected with two-way trunks, if glare occurs, the switching unit with the higher originating point code is granted control of all the trunks with even-numbered CICs. This other switching unit, with the lower originating point code, is granted control of all the trunks with odd-numbered CICs. Enter SGRPYLD (subgroup yield) if glare is resolved on a trunk subgroup basis, and datafill subfield GLAREYLD. For example, the switching unit administrators agree between themselves as to which trunk subgroups they are going to control and which they are going to yield. This is done on a trunk subgroup basis. The subgroup glare resolution method is only available if the value of office parameter ISUP_SUBGRP_GLARE_AVAILABLE in table OFCOPT is set to Y.

TRKSGRP type TUP (continued)

Field descriptions for conditional datafill (Sheet 4 of 4)

Field	Subfield	Entry	Explanation and action
	GLAREYLD	Y or N	*Glare yield* Datafill this field if the entry in subfield GLARETYP is SGRPYLD. Enter Y if this switching unit is to yield control of the trunks in a glare condition in this subgroup. Otherwise, enter N.
	RCGLI	Y or N	*Request calling line identity* Enter Y to request the calling line identity (CLI). Otherwise, enter N.
	OPTIONS	see subfield	*Options* This field has one subfield, OPTION.
	OPTION	ACO, SPMECIDX, or blank	*Option* Enter ACO to specify answer charge override. Enter SPMECIDX to specify a Spectrum peripheral module (SPM) echo canceller index. Then enter data for subfield EC_IDX.
	EC_IDX	0 to 255	*Echo canceller index* Enter the value created for this trunk subgroup in table SPMECAN. After entering data to the OPTIONS field, datafill is complete for SIGDATA = TUP.

TRKSGRP type TUP (continued)

DIR = IC

If the entry in field DIR is IC, datafill subfields IPULSTYP, ESUPR, SAT, ECSTAT, PROTOCOL, ALTRTE, TMRNAME, RCGLI, and OPTIONS as described below.

Field descriptions for conditional datafill (Sheet 1 of 3)

Field	Subfield	Entry	Explanation and action
	IPULSTYP	SS7	*Incoming type of pulsing* Enter SS7.
	ESUPR	F, H, or N	*Echo suppressor* Enter F (full) if a full echo suppressor is located at the near end of the trunk group. The switch takes no action and is used for administrative purposes only. No echo suppressor is inserted in the connection. Enter H (half) if the trunk group has echo suppressors and a half echo suppressor is located at the near end of the trunk group. Enter N (no) if the trunk group has no echo suppressors located at the near end of the trunk group. The default value is N.
	SAT	Y, N, or NIL	*Satellite* Enter Y (yes), if the trunk subgroup is configured to switch through satellite. Otherwise, enter N (no). Enter NIL if the call processing and trunk maintenance datafillable timers are hard coded. Table C7UPTMR is not datafilled for this trunk.

Field descriptions for conditional datafill (Sheet 2 of 3)

Field	Subfield	Entry	Explanation and action
	ECSTAT	EXTERNAL INNOTONE INTERNAL or UNEQ	*Echo canceller status* This field indicates the status of the echo canceller on the trunk subgroup. Enter EXTERNAL if echo cancellations on this trunk subgroup are performed by external echo canceller status equipment, and no call processing control is involved. Enter INNOTONE if internal echo canceller status are to be used for the trunk subgroup, but the use of 2100-Hz tone disabling is turned off. This value is not allowed if the echo suppressor is instrumented on the trunk subgroup. Enter INTERNAL if the echo canceller status on this trunk subgroup are equipped on the NT6X50EC card in the DTC frame, and are enabled by call processing if the call is not a data call. This value is not allowed if echo suppressor is instrumented on the trunk subgroup. Enter UNEQ (unequipped) if echo canceller status is not equipped on this trunk subgroup.
	PROTOCOL	BTUP MBTUP or UCP	*Signaling protocol type* Enter BTUP if the protocol is for the United Kingdom variant of the national user part. Enter MBTUP if the protocol is for United Kingdom variant of the national user part used within a UK market specific network. Enter UCP to provide ISDN user part (ISUP) connectivity between the DMS-250 and the MSL-100 switching units.
	ALTRTE	Y or N	*Alternate routing* This field determines whether routing control indicator (RCI) override is in effect. To specify that RCI override is operative, enter Y (yes). Otherwise, enter N (no).

TRKSGRP type TUP (continued)

Field descriptions for conditional datafill (Sheet 3 of 3)

Field	Subfield	Entry	Explanation and action
	TMRNAME	alphanumeric (1 to 16 characters) or NIL	*Timer name* Enter the timer name, previously datafilled in table C7UPTMR, that is the key to the tuple where the call processing and trunk maintenance timers for the trunk group are found.
	RCGLI	Y or N	*Request calling line identification* Enter Y (yes) to request the CLI. When RCGLI is datafilled with Y, this CLI request functions regardless of the terminating agent. Otherwise, enter N (no), the default value. If the entry in field DIR is IC, datafill is complete for SIGDATA = TUP. ***Note:*** For the UK market, software release EUR004 modified this field to accept CLI requests when terminating to any agent, not just ISUP.
	OPTIONS	see subfield	*Options* This field has one subfield, OPTION.
	OPTION	ACO, SPMECIDX, or blank	*Option* Enter ACO to specify answer charge override. Enter SPMECIDX to specify a Spectrum peripheral module (SPM) echo canceller index. Then enter data for subfield EC_IDX.
	EC_IDX	0 to 255	*Echo canceller index* Enter the value created for this trunk subgroup in table SPMECAN. After entering data to the OPTIONS field, datafill is complete for SIGDATA = TUP.

Note: The options list is common to the datafill for all the signaling data selectors. Therefore some options may not be applicable to certain trunk types. For TUP signaling, the ACO option cannot be datafilled on an incoming trunk. An attempt to do so causes the following error message: *** ACO option is invalid on incoming IUP trunks

DIR = OG

If the entry in field DIR is OG, datafill subfields OPULSTYP, ESUPR, SAT, ECSTAT, PROTOCOL, CBI, ALTRTE, TMRNAME, OVLP, and OPTIONS as described below.

Field descriptions for conditional datafill (Sheet 1 of 3)

Field	Subfield	Entry	Explanation and action
	OPULSTYP	SS7	*Outgoing type of pulsing* Enter SS7.
	ESUPR	F, H, or N	*Echo suppressor* Enter F (full) if a full echo suppressor is located at the near end of the trunk group. The switch takes no action and is used for administrative purposes only. No echo suppressor is inserted in the connection. Enter H (half) if the trunk group has echo suppressors and a half echo suppressor is located at the near end of the trunk group. Enter N (no) if the trunk group has no echo suppressors located at the near end of the trunk group. The default value is N.
	SAT	Y, N, or NIL	*Satellite* Enter Y (yes), if the trunk subgroup is configured to switch through satellite. Otherwise, enter N (no). Enter NIL if the call processing and trunk maintenance datafillable timers are hard coded. Table C7UPTMR is not datafilled for this trunk.

TRKSGRP type TUP (continued)

Field descriptions for conditional datafill (Sheet 2 of 3)

Field	Subfield	Entry	Explanation and action
	ECSTAT	EXTERNAL INNOTONE INTERNAL or UNEQ	*Echo canceller status* This field indicates the status of the echo canceller on the trunk subgroup.Enter EXTERNAL if echo cancellations on this trunk subgroup are performed by external echo canceller status equipment, and no call processing control is involved. Enter INNOTONE if internal echo canceller status are to be used for the trunk subgroup, but the use of 2100-Hz tone disabling is turned off. This value is not allowed if the echo suppressor is instrumented on the trunk subgroup. Enter INTERNAL if the echo canceller status on this trunk subgroup are equipped on the NT6X50EC card in the DTC frame, and are enabled by call processing if the call is not a data call. This value is not allowed if echo suppressor is instrumented on the trunk subgroup. Enter UNEQ (unequipped) if echo canceller status is not equipped on this trunk subgroup.
	PROTOCOL	BTUP MBTUP or UCP	*Signaling protocol type* Enter BTUP if the protocol is for the United Kingdom variant of the national user part. Enter MBTUP if the protocol is for United Kingdom variant of the national user part used within a UK market specific network. Enter UCP to provide ISDN user part (ISUP) connectivity between the DMS-250 and the MSL-100 switching units.
	CBI	Y or N	*Cross border indicator* Enter Y if the call is traversing the boundary between two networks. Otherwise, enter N.
	ALTRTE	Y or N	*Alternate routing* Enter Y if alternate routing is allowed. Otherwise, enter N.

Field descriptions for conditional datafill (Sheet 3 of 3)

Field	Subfield	Entry	Explanation and action
	TMRNAME	alphanumeric (1 to 16 characters) or NIL	*Timer name* Enter the timer name, previously datafilled in table C7UPTMR, that is the key to the tuple where the call processing and trunk maintenance timers for the trunk group are found.
	OVLP	Y or N	*Overlap outpulsing* Enter Y if trunk-to-trunk overlap outpulsing is required. Otherwise, enter N.
	OPTIONS	see subfield	*Options* This field has one subfield, OPTION.
	OPTION	ACO, SPMECIDX, or blank	*Option* Enter ACO to specify answer charge override. Enter SPMECIDX to specify a Spectrum peripheral module (SPM) echo canceller index. Then enter data for subfield EC_IDX.
	EC_IDX	0 to 255	*Echo canceller index* Enter the value created for this trunk subgroup in table SPMECAN. After entering data to the OPTIONS field, datafill is complete for SIGDATA = TUP.

Datafill example

An example of datafill for the United Kingdom variant of national user part (TUP) is shown below.

TRKSGRP type TUP (end)

MAP display example for table TRKSGRP type TUP

```
          SGRPKEY  CARDCODE
SGRPVAR
                                                    SGRPVAR
------------------------------------------------------------
         BTUPIBN2W 0 DS1SIG
TUP
  2W SS7  N N UNEQ BTUP N   TMRS1 N SGRPYLD Y ACO

         BTUPIBNIC 0 DS1SIG
TUP
  IC SS7  N N UNEQ BTUP N N BTUPIC Y CIC N (SPMECIDX 1) $

         BTUPIBNOG 0 DS1SIG
TUP
  OG SS7  N N UNEQ BTUP N N  TMRS1 N          ACO

         QNSY200BTBWE 0 DS1SIG
TUP
  2W SS7  N N UNEQ BTUP N N BTUP2W N CIC N (SPMECIDX 0) $
```

TRKSIG

Table name

FlexDial Trunk Group Signaling (TRKSIG) table

Functional Description

See *UCS DMS-250 FlexDial Framework Application Guide* for table TRKSIG datafill information.

TRKSIG (Supplement for Spectrum)

Table name

Trunk Group Signaling

ATTENTION

This Spectrum-specific information is a supplement to the existing DMS switch TRKSIG table.

Functional description

Note: Table TRKSIG is used only by AXXESS trunks. AXXESS trunks are associated with a tuple in table SPMECAN by way of table TRKSIG.

Table TRKSIG provides an integer index to reference a tuple in table SPMECAN. When the option SPMECIDX is added, operating company personnel can datafill an integer index that references a tuple in the table SPMECAN.

The option SPMECIDX in table TRKSIG is applicable to SS7 and PTS trunks only.

The SPMECIDX option provisions a Spectrum trunk with a Spectrum echo canceller (ECAN). The SPMECIDX option has no effect on extended peripheral module (XPM) trunks—field ECSTAT provisions ECANs on XPM trunks. The SPMECIDX option is applicable to Spectrum trunks only. Similarly, the ECSTAT field is applicable only to XPM trunks and does not impact Spectrum trunks.

Datafill sequence and implications

SS7 and PTS trunks

The SPMECIDX option is applicable to SS7 and PTS trunks only.

ESUPR option

The SPMECIDX option cannot be added to a tuple if the ESUPR option is present in the tuple with a value other than “N." ESUPR is not changed by this feature, so only information pertinent to its relation with the SPMECIDX option is provided. The ESUPR option is used in conjunction with echo suppressors. Spectrum echo cancellers cannot coexist with echo suppressors. A value of “N" for the ESUPR option indicates that an echo suppressor is not present. Therefore, the addition of the SPMECIDX option, which provisions a

Spectrum ECAN, to the options vector is allowed (when the ESUPR option is present with a value “N").

Add or delete a tuple

If the SPMECIDX option is present, and a tuple is added or changed, following conditions must be met:

- The index supplied to the SPMECIDX option must be present in table SPMECAN.
- If the ESUPR option is present, the ESUPR option can only be supplied with a value of “N."

The SPMECIDX option is added to the options vector (CSS7_OPT), which follows field ISUPIDX for SS7 trunks. For PTS trunks the SPMECIDX is added to the options vector (PTS_OPT), which follows field RESETDIGIT. Refer to “Datafill" for more information.

The following illustrates that the SPMECAN table must first be datafilled with the appropriate index, before the index can be referenced in table TRKSIG using the SPMECIDX option. Deleting a tuple from table TRKSIG does not affect table SPMECAN.

```
>table spmecan

>add 1 Y Y G165 N Y Y Y Y Y 32MS 6DB N N

>table trksig

>add FXSLSDTLSDT_0001 FXS LS DTMF 7 6 5 S1234567890P P M LS DTMF 6 160 UNDEF
(BCCOMPAT VOICE_DATA) (ORIGFLTR 7) (ANSWFLTR 16) (RETOFFHK NIL)
(DIGSOUTP 10) (SPMECIDX 1) $
```

The index supplied to option SPMECIDX must exist in table SPMECAN.

Delete a tuple

Deleting a tuple from table TRKSIG does not affect table SPMECAN.

Table size

No change

TRKSIG (Supplement for Spectrum) (continued)

Datafill

The following table describes the SPMECIDX option.

Field	Subfield or refinement	Entry	Explanation and action
SPMECIDX		0-255	

SS7 trunks

The SPMECIDX option is added to the options vector (CSS7_OPT), which follows field ISUPIDX for SS7 trunks.

“UCS2EAEQ" in the following example is the entry for ISUPIDX. “BCCOMPAT VOICE_DATA" is the CCS7_OPT options vector.

```
SS7UCP_0047   CCS7   UCP   DMSNODE   UCS2EAEQ   (ABCNTRL )   (GLARE STAND)
EXTERNAL)   (BCCOMPAT VOICE_DATA)   (DELIVER ALWAYS)   (COT 100 LOOPAROUND)
(SPMECIDX 255) $
```

SS7 signaling type TRKSIG data refinements

The following table contains the SS7 signaling types refinement fields.

Field	Subfield or refinement	Entry	Explanation and action
CCS7	PROTOCOL		No change.
	ADJNODE		No change.
	ISUPIDX		No change.
	OPTIONS	NIL, SPMECIDX, COT, DELIVER, BCCOMPAT, ESUPR, ECSTAT, GLARE, ABCNTRL	This options vector contains all the options applicable to this trunk group.

PTS trunks

For PTS trunks, the SPMECIDX is added to the options vector (PTS_OPT), which follows field RESETDIGIT.

The following illustrates that the SPMECIDX option is allowed when the ESUPR option is datafilled with a value of “N." “UNDEF" is the entry for RESETDIGIT. “BCCOMPAT VOICE_DATA" is the PTS_OPT options vector.

```
FXSLSDTLSDT_0001  FXS  LS  DTMF  7  6  5  S1234567890P  P  M  LS  DTMF  6  1(
(ESUPR N)   (BCCOMPAT VOICE_DATA)   (ANSWFLTR 16)   (RETOFFHK NIL)
(DIGSOUTP 10)   (SPMECIDX 0) $
```

PTS signaling type TRKSIG data refinements

The following table contains the PTS signaling types refinement fields.

Note: The PTS signaling types consist of the DS1, FXS, and FXO SIGTYPE values.

(Sheet 1 of 2)

Field	Subfield or refinement	Entry	Explanation and action
DS1, FXS, or FXO	ISTARTSG		No change
	INCMINFO		No change
	DIALMODE		No change
	OSTARTSG		No change
	OPULSTYP		No change
	OIDGTMR		No change
	TRKGRDTM		No change

TRKSIG (Supplement for Spectrum) (continued)

(Sheet 2 of 2)

Field	Subfield or refinement	Entry	Explanation and action
	RESETDIGIT		No change
	OPTIONS	NIL, SPMECIDX, DIGSOUTP, RETOFFHK, ATDANS, TDSCFLTR, ANSWFLTR, ODSCFLTR, ORIGFLTR, DELIVER, BCCOMPAT, ESUPR, ECSTAT, ACKWINK, CPIALLOW, MLTSTAGE, IRINGCHK, ALTSEIZ, REMBSY, DETDIAL, GLAREYD	Up to 23 options can be provisioned in this vector.

Error message

The following illustrates the error message that displays when an attempt is made to add the SPMECIDX option when the ESUPR option has a value other than “N."

```
SPMECIDX option is NOT allowed along with the ESUPR option with value other tl
TUPLE TO BE CHANGED:
FXSLSDTLSDT_0001
FXS LS DTMF 7 6 5 S1234567890P P M LS DTMF 6 160 UNDEF (ESUPR H)
(BCCOMPAT VOICE_DATA) (ORIGFLTR 7) (ANSWFLTR 16) (RETOFFHK NIL)
(DIGSOUTP 10) (SPMECIDX 1) $

ENTER Y TO CONFIRM, N TO REJECT OR E TO EDIT.
```

Datafill example

The following shows two table TRKSIG tuples, the first with the SPMECIDX option datafilled and the second example without the SPMECIDX option.

```
FXSLSDTLSDT_0001 FXS LS DTMF 7 6 5 S1234567890P P M LS DTMF 6 160 UNDEF
(BCCOMPAT VOICE_DATA) (ORIGFLTR 7) (ANSWFLTR 16) (RETOFFHK NIL)
(DIGSOUTP 10) (SPMECIDX 100) $

FXSLSDTLSDT_0002 FXS LS DTMF 7 6 5 S1234567890P P M LS DTMF 6 160 UNDEF
(BCCOMPAT VOICE_DATA) (ORIGFLTR 7) (ANSWFLTR 16) (RETOFFHK NIL)
(DIGSOUTP 10)$
```

Supplementary information

Dump and restore

Since SPMECIDX is added as an option in table TRKSIG, if the feature is not present on the dump side and only present on the restore side, then there is no impact on table TRKSIG. The SPMECIDX does not show on the restore side after one-night processing (ONP).

If this feature is present on both the dump and restore sides, the SPMECAN table is restored prior to table TRKSIG. If any tuples in table TRKSIG are pointing to a tuple in table SPMECAN before ONP, they continue to do so after ONP.

Table history

SPM01 on UCS08 (CSP08)

Table TRKSIG was changed to provide an integer index to reference a tuple in table SPMECAN.

TRTMTACT

Table name

Treatment to Activity Mapping Table

Functional description

Table TRTMTACT is used by the central control (CC) and provides a translation from an extended treatment to an R2 activity. It is used when an office recognizes that a treatment must be applied to a call.

This table is only required for incoming R2 multifrequency-compelled (MFC) signaling trunks.

If the treatment translates into a non-nil activity, then a backwards signal is sent to a previous office, indicating the type of treatment to apply. The treatment is not connected in this office.

If the extended treatment translates into the nil activity, then the treatment is connected at this office. Previous offices are instructed to connect speech.

Each protocol has one set of TRTMTACT tuples datafilled to provide the mappings required. A maximum of 256 valid treatments are allowed.

For related information, refer to table ACTTRTMT for a list of R2 activities.

Datafill sequence and implications

There is no requirement to datafill other tables prior to table TRTMTACT, however, if the operating company intends to supply trunk access, the following tables must be datafilled first.

- ACTCTL
- ACTSIG
- R2PROT

Table size

0 to 3840 tuples

Table size is dynamically determined by the number of tuples added. Up to 256 tuples can be datafilled for each treatment-to-activity mapping. Up to 15 mappings can be defined in each office.

Datafill

The following table lists datafill for table TRTMTACT.

Field descriptions

Field	Subfield or refinement	Entry	Explanation and action
INDEX		see subfields	*Treatment index* This field consists of subfields TRTNAME and TRTMT.
	TRTNAME	vector (up to 8 characters)	*Treatment group name* Enter the treatment group name that associates a trunk group with a range of treatments or treatment group. This field is used by table TRKGRP on MTR and OPR trunk types, and TRKSGRP on FST trunk types. Up to 16 names can be entered, including the name NIL.
	TRTMT	alphanumeric (up to 4 characters)	*Treatment* Enter the name of the extended treatment. The full list of extended treatments is valid. Reference table TMTCNTL for a full list of extended treatment types and their descriptions.
ACTIVITY		CONGES-TION SPARE_-TRTMT 1SPARE_-TRTMT2 SUB_BUSY SUB_LBUSY SUB_OUT_-ORD SUB_TBUSY SUB_XFRD TEMP_OUT-_ORD UNASSIGN-_NUM	*R2 activity* Enter the type of treatment activity. Any entry outside the range indicated for this field is invalid. Reference table ACTCTL for entry descriptions.

TRTMTACT (end)

Datafill example

The following example shows sample datafill for table TRTMTACT.

MAP display example for table TRTMTACT

```
INDEX                   ACTIVITY
TRTNAME    TRTMT
_____________________________________________________________

MORTRTT    BUSY         SUB_BUSY
```

TSTLCONT

Table name

Test Line Control Table

Functional description

Table TSTLCONT lists the index (TSTNOIND) within the range of 000 to 164 assigned to each of the test line number (TLNOS) subtables.

This table is not used when test calls are performed on common channel interoffice signaling (CCIS) trunks. However, even if the office is entirely CCIS, this table must be datafilled for testcall software to function.

Datafill sequence and implications

Refer to table TSTLCONT.TLNOS

Table size

Refer to table TSTLCONT.TLNOS

Datafill

Refer to table TSTLCONT.TLNOS.

Datafill example

Refer to table TSTLCONT.TLNOS.

MAP display example for table TSTLCONT

```
TSTNOIND   TLNOS
_____________________________________________________________

       0 (   27)
       1 (    0)
       2 (    0)
       3 (    0)
```

TSTXCON

Table name

Test Cross Connections Table

Functional description

Table TSTXCON acts as a look-up table to define the relationship between MAP (maintenance and administration position) terminal jacks and headsets, and external trunk numbers (EXTRKNM). Table TSTXCON uses the terminal descriptions provided in table TERMDEV, using field TERMDES as the key. The EXTRKNMs are selected from the datafill in table TRKMEM. Jack, headset, and EXTRKNM connections are made from the MANUAL sublevel of the Trunk Test Position (TTP) level of the MAP.

Datafill sequence and implications

The following tables must be datafilled before table TSTXCON:

- TERMDEV
- TRKMEM

Table size

0 to defined number of tuples

Table size and memory size are defined by the maximum number of MAP devices entered in table TERMDEV.

Datafill

The following table lists datafill for table TSTXCON.

Field descriptions

Field	Subfield or refinement	Entry	Explanation and action
TERMDES		alphaumeric (up to 8 characters)	*Terminal designation* Enter the MAP (maintenance and administration position) terminal device name. The entry must be a valid device name datafilled in field TERMDES in table TERMDEV. This is the key field.
JKHSETAB		see subfields	*Jack and headset A&B trunk combinations* This field consists of subfields TRKNAME and EXTRKNM. A vector of up to 24 multiples of jack (or headset) and external trunk number combinations can be datafilled. If less than 24 multiples are required, end the list with a $ (dollar sign). For GL02, only one jack (or headset) and external trunk number combination can be datafilled.
	TRKNAME	JACK or HSET	*Trunk name* Enter the name of the trunk test connection. Entries are a vector consisting of the type of test connection (JACK or HSET) followed by the external trunk number. Datafill subfield EXTRKNM to complete each combination.
	EXTRKNM	1 to 9999	*External trunk number* Enter the external trunk number associated with the trunk name datafilled in subfield TRKNAME to complete each combination. Entries outside this range are invalid.

TSTXCON (end)

Datafill example

The following example shows sample datafill for table TSTXCON.

MAP display example for table TSTXCON

```
  TERMDES

JKHSETAB
_____________________________________________________________________
   MAP
(HSET    4)$
```

Table history

GL02

Field JKHSETAB limited to 1 headset per MAP for GL02.

BCS36

Field JKHSETAB was changed to accept up to 24 multiples.

BCS34

Table TSTXCON was introduced.

TTL4

Table name

Terminating Test Line #4 Table

Functional description

Table TTL4 defines up to a maximum of eight sets of values for use by the 104 test line. The following information is specified by each of the eight sets of values:

- the reference transmission test tone level
- the near-to-far-end transmission noise threshold level
- whether answer supervision is returned to the near end

Datafill sequence and implications

There is no requirement to datafill other tables prior to table TTL4.

Table size

Table TTL4 has a fixed length of eight entries.

Datafill

The following table lists datafill for table TTL4.

Field descriptions (Sheet 1 of 2)

Field	Subfield or refinement	Entry	Explanation and action
INDEX		numeric (0 to 7)	*Index* Enter the index into table TTL4.
TTLEV		numeric (0 to 100)	*Transmission test tone level* Enter the reference transmission test tone level in increments of 0.1 decibel (dB).

TTL4 (end)

Field descriptions (Sheet 2 of 2)

Field	Subfield or refinement	Entry	Explanation and action
NOISELEV		numeric (0 to 50)	*Noise level* Enter the near-to-far-end transmission noise level in increments of 1 decibel above reference noise (dBrn) with C-message weighting (dBrnc).
ANSSUPRV		Y or N	*Answer supervision* Enter Y (yes) if answer supervision is required to return to the near end. Otherwise, enter N (no). Any entry outside the range indicated for this field is invalid.

Datafill example

An example of initial datafill for table TTL4 is shown below. This example has been datafilled in accordance with the following requirements:

- For index 0, the transmission test tone level is 0 dB, the near-to-far-end transmission noise level is 41 dBrnc, and answer supervision is returned to the near end.
- For index 1, the transmission test tone level is 0 dB, the near-to-far-end transmission noise level is 44 dBrnc, and answer supervision is not returned to the near end.

MAP display example for table TTL4

```
INDEX    TTLEV     NOISELEV  ANSSUPRV
_____________________________________________________

    0        0           41         N
```

TYP2PRTM

Table name

Pretranslator Name (TYP2PRTM) table

Functional description

Table TYP2PRTM is used to accommodate universal translations for national calls on UCS DMS-250 ISUP IMT GLOBAL and INTRA trunk agencies in the global market (SOC option GIMT0001 enabled). The table provides a pretranslated name for call processing, based on the called party NOA received in the incoming IAM message, and PRTNM obtained from table PRETNAME.

Note: GLOBAL ISUP IMT refers to IMT with NETWKSPC field in TRKGRP set to GLOBAL and the protocol in TRKSGRP set to UCP. INTRA ISUP IMT refers to IMT with NETWKSPC field in TRKGRP set to INTRA and the protocol in TRKSGRP set to UCP.

The translation scheme is as follows:

- If the PRTNM obtained from table TRKGRP is Nil pretranslator name (NPRT), the call is given vacant code (VACT) treatment.
- If the PRTNM obtained from table PRETNAME is Nil pretranslator name (NPRT), the call is given VACT treatment.
- If the pretranslator is not datafilled in table TYP2PRTM, the pretranslator obtained from PRETNAME is retained.
- When the OPRTNM field of table TYP2PRTM is datafilled with Nil Pretranslator Name (NPRT), the call is given a VACT treatment.

Datafill sequence and implications

Datafill PRTNM and OPRTNM in table STDPRTCT before datafilling TYP2PRTM.

Table size

The maximum table size is 1024 tuples.

Memory requirements

Tuples in table TYP2PRTM dynamically allocate required memory. Each tuple requires 2 bytes of memory; memory required by block of 128 NOAs (against one PRTNM) is 256 bytes. Therefore, 1024 x 256bytes or 256K bytes of memory are required.

TYP2PRTM (end)

Field descriptions

The following table describes field names, subfield names, and valid data ranges for table TYP2PRTM.

Field	Subfield or refinement	Entry	Explanation and action
KEY			KEY. This field consists of a 2-part multiple: PRTNM and NOA.
	PRTNM	Pretranslator name from table STDPRTCT	INCOMING PRETRANSLATOR NAME. Enter a valid entry from table STDPRTCT.
	NOA	Valid NOA	NATURE OF ADDRESS. Enter the called party NOA.
OPRTNM		Pretranslator name from table STDPRTCT	TRANSLATED PRTNM. Enter the translated PRTNM used to enter table STDPRTCT. Default value is NPRT.

Datafill example

The following example shows datafill for table TYP2PRTM.

```
KEY OPRTNM
__________
IMT SUBR IMT
IMT VPN IMT
IMT NATL IMT
IMT INTL IMT
GIMT SUBR GIMT
GIMT VPN GIMT
GIMT NATL GIMT
GIMT INTL GIMT
```

Table history

UCS06

Table TYP2PRTM is created.

UIFNDBS

Table name

Universal International Freephone Number (UIFN) Database table

Functional description

Table UIFNDBS is the UIFN database for the in-switch UIFN feature. The key to table UIFNDBS is the length of the UIFN after pretranslations. Table UIFNDBS has a subtable, UIFNDBS.UIFNFEAT, where the UIFNs are entered as data, along with an incoming exclusion index, STS, transum, and translation system information for call processing. The structure of the UIFN database is based on subtables to accommodate the evolution of the UIFN feature.

Datafill sequence and implications

The STS field in table HNPACONT must be datafilled before table UIFNDBS. No particular sequence or UIFN SOC state is required to enter data for this table.

Table size

The maximum size for table UIFNDBS is one tuple.

Datafill

The following table lists datafill for table UIFNDBS.

Field descriptions

Field	Subfield or refinement	Entry	Explanation and action
UIFNLEN		11	UIFN LENGTH. The value for UIFNLEN represents the length of the dialed number received, excluding the value of the field NOPREDIG in STDPRTCT and additional digits. UIFNLEN must be 11 digits.
UIFNFEAT		no entry required (see explanation)	UIFN FEATURE. No data is entered for this field. A zero (0) is displayed to indicate that the UIFNFEAT subtable is empty. A one (1) is displayed to indicate subtable UIFNFEAT contains at least one tuple.

Datafill example

The following example shows sample datafill for table UIFNDBS.

UIFNDBS (end)

MAP display example for table UIFNDBS

```
UIFNLEN         UIFNFEAT
_____________________________________________________________
   11               (  1)
```

Table history

UCS08

This table was introduced to support the Universal International Freephone Number function.

UIFNGSC

Table name

Universal International Freephone Number (UIFN) Global Service Code (GSC) table

Functional description

Table UIFNGSC contains datafill for valid UIFN Global Service Codes. This table is used for all UIFN calls.

Datafill sequence and implications

There is no requirement to datafill other tables prior to table UIFNGSC.

Table size

The maximum size of table UIFNGSC is 1,000 tuples.

Datafill

The following table lists datafill for table UIFNGSC.

Field descriptions

Field	Subfield or refinement	Entry	Explanation and action
GSC_KEY		3 digits of 0 to 9	GLOBAL SERVICE CODE KEY. Enter a three digit GSC.

Datafill example

The following example shows sample datafill for table UIFNGSC.

MAP display example for table UIFNGSC

```
GSC_KEY
_____________________________________________________________
800
899
```

UIFNGSC (end)

Table history

UCS08

This table was introduced to support the Universal International Freephone Number function.

UNIPROF

Table name

Universal Profile (UNIPROF) table

Functional description

This table stores the possible profiles for different ANI values. When an ANI is received, it is validated in table ANIVAL and then indexes this table to find the profile for the recieved ANI number.

Datafill sequence and implications

Table CDRTMPLT must be datafilled before table UNIPROF if the CDRTMPLT option is to be used.

Table CAINGRP must be datafilled before table UNIPROF if the CAINGRP option is to be used.

Table size

0 to 65534 tuples.

Datafill

The following table lists datafill for table UNIPROF.

Field descriptions (Sheet 1 of 3)

Field	Subfield or refinement	Entry	Explanation and action
UNIKEY		vector of up to 8 characters	UNIVERSAL PROFILE KEY. This field is the key to the table.
PROFNUM		0 to 65,533	PROFILE NUMBER. A unique identifier for the profile.
UNITYPE		NPA, NXX, or SUB	UNIVERSAL PROFILE TYPE. Enter the type of profile to be used. For NPA and NXX ANI types, datafill the STATUS refinement. For SUB ANI types, datafill the STATUS, OPART, TERMPART, SATRES, MLTCOSID, ANIDELV, and OPTIONS refinements.
	STATUS	CA, NA, DA, AL, RD	STATUS. Enter the status of the type. CA=casual. DA=disallowed. NA=not allowed. AL=allowed. RD=recently disallowed. For NPA and NXX types, the only valid entries are CA, NA, and DA. For type SUB, the only valid entries are CA, AL, DA, and RD.

UNIPROF (continued)

Field descriptions (Sheet 2 of 3)

Field	Subfield or refinement	Entry	Explanation and action
	OPART	0 to 999	ORIGINATING PARTITION NUMBER. Enter an originating partition (OPART) number.
	TERMPART	0 to 31	TERMINATING PARTITION NUMBER. When ANIDIGS field identifies a 10-digit ANI, enter the terminating partition number associated with the subscriber that is translated to a serving translation scheme (STS) for off-net calling.
	SATRES	N or Y	SATELLITE RESTRICTED. Enter Y to restrict the call from being routed through a satellite.
	MLTCOSID	0 to 2047	MULTIPLE CLASS OF SERVICE INDEX. This field indexes into table MULTICOS to indirectly point to table COSUS. The default value is 0 to indicate no COS screening is performed. With table MULTICOS, a single MLTCOSID can contain up to 32 COSUS indexes. and therefore COS screening can be performed up to 32 times per call.
	ANIDELV		ACCOUNT NUMBER IDENTIFICATION DELIVERY. This field controls the delivery of ANI for FGD and PRI CLID-billed originations. This field is only used for 10-digit ANIs.
		ALWAYS	ALWAYS. For ISUP, deliver the CPN, CGN and OLI. For PTS, deliver the ANI. For PRI, deliver the CLID.
		NEVER	NEVER. Do not deliver anything
		CPONLY	CPONLY. For ISUP deliver only the CPN. For PTS, deliver the ANI. For PRI, deliver the CLID.

Field descriptions (Sheet 3 of 3)

Field	Subfield or refinement	Entry	Explanation and action
		CGNONLY	CGONLY. For ISUP, deliver only the CGN and OLI. For PTS, deliver the ANI. For PRI, deliver nothing.
	OPTIONS	ACCTIDX, ACCT, PIN, PINDIGS, OPCHOICE, PASSTHRU, CAINGRP, CDRTMPLT	OPTIONS. Enter up to ten options, one at a time, and datafill the corresponding refinement(s) after each one. (see Table 2 for refinement information)

Option descriptions

Option descriptions (Sheet 1 of 3)

Option	Refinement	Entry	Explanation and action
ACCTIDX			ACCOUNT INDEX. This option indexes the account code database.
	ACCTIDX	0 to 4294967295	ACCOUNT INDEX. Enter the value for the account code database index.
ACCT			ACCOUNT CODE. If this option is selected, an account code will be collected.
	ACCTLEN	0 to 12	ACCOUNT CODE LENGTH. Enter the number of digits that should be collected for the account code.
	ACCTVAL	Y or N	ACCOUNT CODE VALIDATION. The entry in this refinement determines whether or not the the account code should be validated.
PIN			PERSONAL IDENTIFICATION NUMBER.
	PINLEN	0, 2, or 3	PIN LENGTH. This refinement identifies the length of all multiple PIN digits.
	PININDEX	0 to 8191	PIN INDEX. Enter the index to table MULTIPIN.

UNIPROF (continued)

Option descriptions (Sheet 2 of 3)

Option	Refinement	Entry	Explanation and action
PINDIGS			PERSONAL IDENTIFICATION NUMBER DIGITS. This option is used to further identify authorized users of the system.
	PINDIGS	0 to 4 digits (0 to 9, A to D)	Enter up to 4 characters with a combination of numbers or A through D. Enter $ when PIN digits are no longer required.
OPCHOICE			OPERATOR CHOICE. Enter OPCHOICE to provide alternate routing of operator service calls. This option is only available ofr 0- or 0+ calls.
	OPCHIDX	0 to 1023	OPERATOR CHOICE INDEX. This value is an index to table OPCHOICE
PASSTHRU			PASS THROUGH. This option identifies the particular FGD call types using this ANI number where the PASSTHRU feature is active.
	PASSTHRU	PURE_ONLY	Only pure-FGD calls originating with this ANI profile use the PASSTHRU feature.
		CUT_ONLY	Only cut-through FGD calls originating with this ANI profile use the PASSTHRU feature.
		PURE_CUT	Both pure-FGD and cut-through FGD calls originating with this ANI profile use the PASSTHRU feature.
CAINGRP			CAIN GROUP. This option identifies the CAIN services associated with the specified profile.
	CAINGRP	a valid CAIN group from table CAINGRP	CAIN GROUP. Specify the CAIN group to subscribe to.
CDRTMPLT			CDR TEMPLATE. This option is used to identify the CDR template used to generate CDRs for the specified ANI.

Option descriptions (Sheet 3 of 3)

Option	Refinement	Entry	Explanation and action
	TMPLTIDX		TEMPLATE INDEX. When SOC option UBFR0001 is enabled, you can use table CDRTMPLT to create new CDR templates. For more information on CDR templates, see *UCS DMS-250 Billing Records Application Guide*.
	USEEDIT	Y or N	USEEDIT. Enter N to use the active version of the CDR template. Y indicates that the edit version is used. *Note:* This option is for testing only and should be set to N, which is the default.

Datafill example

The following example shows sample datafill for table UNIPROF.

MAP display example for table UNIPROF

```
UNIKEY   PROFNUM   UNITYPE   REFAREA
-------------------------------------------------------
UNIKEY1 1 NPA CA
UNIKEY2 2 NXX CA
UNIKEY3 3 SUB AL 7 31 N 0 ALWAYS (OPCHOICE 2) (ACCTIDX 1)
$
UNIKEY4 4 SUB AL 7 31 N 0 ALWAYS (ACCT 2 N) (PIN 2 33) $
UNIKEY64K SUB AL 7 31 N 20 ALWAYS    $
```

Table history

UCS13

Removed UCS07 and UCS07FLEX values from table OPTION=CDRTMPLT (A60007776).

UCS11

The OPCHIDX field is updated. The maximum number of entries is expanded to 1023. (A60006449).

UCS08

Feature AX0211 increased the maximum table size for UNIPROF to 65,534 tuples.

UNIPROF (end)

UCS07

Table UNIPROF is created.

UNRESDAT

Table name

Usage Restricted by Date (UNRESDAT) table

Functional description

Table UNRESDAT permits the operating company to block certain classes of their customers from making calls on certain dates when call screening is applied. For example, if a certain class of customers is allowed to make calls only on certain days of the month, the call screening would be applied only on those days.

Field descriptions

The following table describes field names, subfield names, and valid data ranges for table UNRESDAT.

Field	Subfield or refinement	Entry	Explanation and action
DATE		see subfields	DATE KEY. This field consists of a 3-part key: MONTH, DAY, and REST.
	MONTH	JAN, FEB, MAR, APR, MAY, JUN, JUL, AUG, SEP, OCT, NOV, DEC	MONTH KEY. Enter the month when calls are restricted.
	DAY	1 to 31	DAY OF THE MONTH KEY. Enter the day of the month when calls are restricted.
	REST	1 to 255	RESTRICTION. Enter 1 to 255.
RESTRICTION		R, U, B, V	RESTRICTION TYPE. Enter one of the following: • R - restricted • U - unrestricted • B - blocked • V - vacant (none of the above)

Datafill example

The following example shows datafill for table UNRESDAT.

UNRESDAT (end)

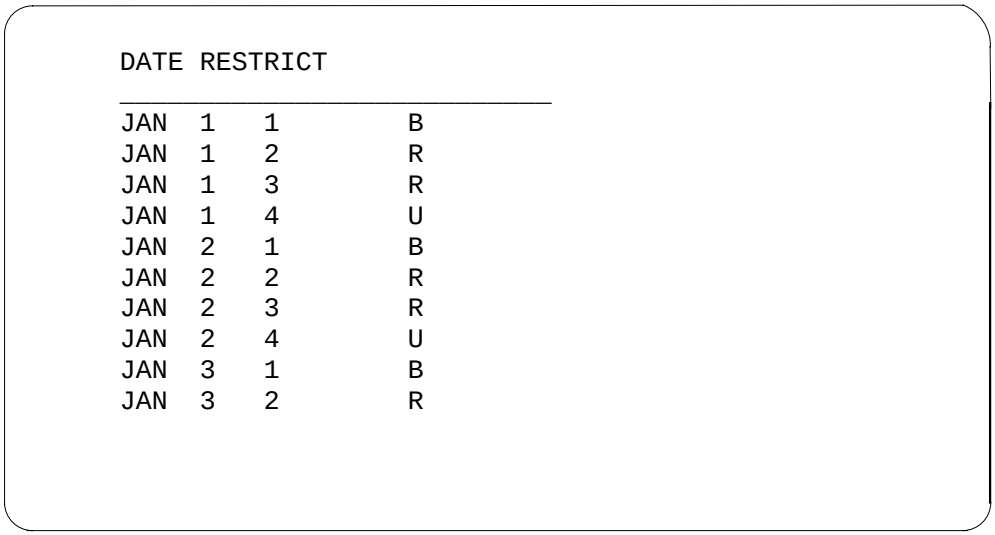

DATE	RESTRICT		
JAN	1	1	B
JAN	1	2	R
JAN	1	3	R
JAN	1	4	U
JAN	2	1	B
JAN	2	2	R
JAN	2	3	R
JAN	2	4	U
JAN	3	1	B
JAN	3	2	R

Table history

UCS06

Updated table to accommodate expansion of TOD restriction tables.

UNRESDAY

Table name

Usage Restricted by Day (UNRESDAY) table

Functional description

Table UNRESDAY permits the operating company to block certain classes of their customers from making calls on certain days when call screening is applied. For example, if a certain class of customers is allowed to make calls only during non-business hours, Monday through Friday, the call screening would be applied only on those days.

Field descriptions

The following table describes field names, subfield names, and valid data ranges for table UNRESDAY.

Field	Subfield or refinement	Entry	Explanation and action
DAY		see subfields	DAY. This consists of a 2-part key: DAYKEY and RESTKEY.
	DAYKEY	MON, TUE, WED, THU, FRI, SAT, SUN	DAY OF THE WEEK KEY. Enter the day of the week when calls are not to be screened by date and time.
	RESTKEY	1 to 255	RESTRICTION KEY. Enter 1 to 255.
RESTRICT		R, U, B, V	RESTRICTIONS. Enter one of the following: • R - restricted • U - unrestricted • B - blocked • V - vacant (none of the above)

Datafill example

The following example shows datafill for table UNRESDAY.

UNRESDAY (end)

```
DAY RESTRICT
_____________________________

MON   1        R
MON   2        B
MON   3        R
MON   4        U
TUE   1        R
TUE   2        B
TUE   3        R
TUE   4        U
WED   1        R
WED   2        B
```

Table history

UCS06

Updated table to accommodate expansion of TOD restriction tables.

UNRESTIM

Table name

Usage Restricted by Date and Time (UNRESTIM) table

Functional description

Table UNRESTIM permits the operating company to block certain classes of customers from making calls during certain hours of the day on days that call screening is applied. For example, if a certain class of customer is allowed to make calls only during non-business hours, the call screening is applied only on those days.

Field descriptions

The following table describes field names, subfield names, and valid data ranges for table UNRESTIM.

Field	Subfield or refinement	Entry	Explanation and action
CLASS		1 to 255	CLASS KEY. Enter class index from table COSUS.
VALID		see subfields	VALID. This is a 4 part field: FROM_HOUR, FROM_MINUTE, TO_HOUR and TO_MINUTE. Up to 7 ranges can be datafilled. Examples: 12:00 Midnight = 0, 5:00PM = 17
	FROM_HOUR	0 to 23	FROM HOUR. Enter the start time when the USERCLAS becomes valid.
	FROM_MINUTE	0 to 59	FROM MINUTE. Enter the start time when the USERCLAS becomes valid.
	TO_HOUR	0 to 23	TO HOUR. Enter the stop time when the USERCLAS becomes invalid.
	TO_MINUTE	0 to 59	TO MINUTE. Enter the stop when the USERCLAS becomes invalid.

Datafill example

The following example shows datafill for table UNRESTIM.

UNRESTIM (end)

```
CLASS          VALID
_____________________________

1 $
2 $
3) ( 4  0  4  1) $
4 $
```

Table history

UCS06

Updated table to accommodate expansion of TOD restriction tables.

VAMPTRID

Table name

Variable Advanced Intelligent Network Messaging Platform Transaction ID (VAMPTRID) table

Functional description

The Variable AIN Messaging Platform (VAMP) framework provides key resources used in Carrier AIN messaging, including transaction and component IDs, message buffers, and T1 timing facilities. To send and receive messages, CAIN applications built on VAMP must provision the necessary resources in table VAMPTRID.

All VAMP resources are datafilled in table VAMPTRID. There are three resource types provisioned through table VAMPTRID.

- Transaction IDs (TRID)
- Component IDs (COMP)
- Message buffers (MESG)

Refer to the *UCS DMS-250 NetworkBuilder Application Guide* for more information.

There is one tuple for each VAMP-based AIN application on the switch. The tuples are added by software.

ATTENTION

Tuples cannot be added or removed from the table through table control interface. Tuples can only be updated.

ATTENTION

An increase to any field in this table takes effect immediately. A decrease to any field adjusts the usage limits and warning thresholds immediately, but store is not actually deallocated until a cold restart is performed.

When large numbers of resources are added to a tuple in one operation, a short delay may occur while the resources are initialized and made available to the application. The message ``This operation may take up to 30 seconds'' may be displayed on the MAP terminal.

VAMPTRID (continued)

Table size

For each application, 4096 words of store are required as overhead when no resources are datafilled.

An additional 128 words of store are used by each transaction ID block, and an additional 256 words of store are used by each component ID block or message buffer.

Datafill sequence and implications

Datafill this table before queries can be made with any application based on the VAMP framework.

Field descriptions

The following table describes field names, subfield names, and valid data ranges for table VAMPTRID.

VAMPTRID field descriptions (Sheet 1 of 2)

Field	Subfield or refinement	Entry	Explanation and action
KEY		CAIN02, IN1	VAMP MESSAGING SET. Enter the application ID. There is no default.
TRIDS		0 to 32767	TRANSACTION ID BLOCKS. Enter the number of the transaction ID blocks to be allocated for use by the application.

VAMPTRID field descriptions (Sheet 2 of 2)

Field	Subfield or refinement	Entry	Explanation and action
COMPS		0 to 32767	COMPONENT ID BLOCKS. Enter the number of the component ID blocks to be allocated for use by the application.
MESGS		0 to 32767	MESSAGE BUFFERS. Enter the number of the message buffers to be allocated for use by the application.
ACGBS		0 to 32767	ACG BLOCKS. Enter the number of ACG blocks to be allocated for use by the application.

Datafill example

The following example shows datafill for table VAMPTRID

```
KEY TRIDS COMPS MESGS ACGBS
_____________________________
CAIN02 60 60 60 60
IN1 60 60 60 60
```

VAMPTRID (end)

Table history

UCS09

The key field was modified to include a new value IN1 (AX1249).ACGBS field added to table VAMPTRID (AX1249).

UCS05

Table VAMPTRID is created.

VARCLI.CLIDATA

Table name

Variable Length CLI (VARCLI.CLIDATA) subtable

Functional description

Table VARCLI is used to support originations on UCS DMS-250 ISUP IMT trunk agencies in the global market (SOC option GIMT0001 is enabled). Subtable VARCLI.CLIDATA contains the variable length calling line identification (CLI) and the corresponding index into the table ANISCUSP. Only the CLIs of length equal to or less than the corresponding length specified by the key in the table VARCLI can be datafilled in these subtables. Anything smaller in length is taken as a range of values while anything greater in length is not allowed.

Field descriptions

The following table describes field names, subfield names, and valid data ranges for subtable VARCLI.CLIDATA.

Field	Subfield or refinement	Entry	Explanation and action
FROMDIGS		1 to 15 digits (0 to 9)	FROM DIGITS. Enter the CLI or starting point for the range of CLIs that are mapped to a particular index in the table ANISCUSP.
TODIGS		1 to 15 digits (0 to 9)	TO DIGITS. Enter the CLI or ending point for the range of CLIs that are mapped to a particular index in the table ANISCUSP.
ANIINDEX		3, 6, or 10 digits(0 to 9)	ANI INDEX. Enter the 3-, 6-, or 10 digit ANI to which a range of variable length CLIs or a single CLI maps. The 3-, 6-, or 10 digit number is an index into the table ANISCUSP.

Datafill example

The following example shows datafill for subtable VARCLI.CLIDATA.

VARCLI.CLIDATA (end)

```
FROMDIGS TODIGS ANIINDEX
_______________________________
1122334455 1122334455 1122334455
2046112211 2046112211 2046112211
2126112263 2126112263 2126112263
2135112264 2135112264 2135112264
2145112211 2145112211 2145112211
2146112211 2146112211 2146112211
2146112216 2146112216 2146112216
```

Table history

UCS06

Subtable VARCLI.CLIDATA is created.

VERSIONS

Table name

Versions Table

Functional description

Table VERSIONS, a read-only table, stores the type versions defined on a particular load. Table VERSIONS consists of three fields: the key and two numeric ranges to store the version data. The external representation of a tuple in table VERSIONS consists of the name of the type, current version of the type, and and the version of the type on the dump side. The version of the type on the dump side has no meaning until the dump side table VERSIONS is transferred to the restore side and the mapping is created. Table VERSIONS contains only tuples for types that have undergone a change requiring its type version to be incremented.

Datafill sequence and implications

During a software upgrade, this table must be transferred first.

Table size

Memory is allocated dynamically for this table.

Datafill

The following table lists datafill for table VERSIONS.

Field descriptions

Field	Subfield or refinement	Entry	Explanation and action
TYPENAME		alphanumeric (up to 32 characters)	*Type name* This is the key field; it stores the name of a data dictionary type that is considered to have type versions.
CURRVERS		0 to 32767	*Current version* This field stores the current version of a type.
DUMPVERS		0 to 32767	*Dump version* This field stores the dump version of the current type.

Datafill example

The following example shows sample datafill for table VERSIONS.

VERSIONS (end)

TYPENAME	CURRVERS	DUMPVERS
EXTENDED_TREATMENT	0	0
TABLE_OWNERSHIP	0	0
DATA_SELECTOR	0	0
OFFICE_PARM_NAME	0	0
VOLUME_TYPE	0	0
BANNER_LOGICAL_TUPLE	0	0
VAR_LTC_PSLINK_TC_TAB	1	0
LTC_LOGTUPLE	1	0

Table history

CSP02

Table VERSIONS was introduced.

VARCLI

Table name

Variable Length Calling Line Identification (VARCLI) table

Functional description

Table VARCLI is used to support originations on UCS DMS-250 ISUP IMT trunk agencies in the global market (SOC option GIMT0001 is enabled). The table provides a mapping between the variable length calling line identifications (CLIs) received on UCS ISUP IMT GLOBAL trunks, and the 3-, 6-, and 10-digit ANIs in table ANISCUSP. The CLI, like the ANI, identifies the originating subscriber's phone set.

The index into the table VARCLI is the length of the CLI digits received in the incoming IAM. The length can be anywhere between 1 to 15 digits. Corresponding to each digit length, there is a subtable (CLIDATA) associated with it. The index into the subtable CLIDATA, which does the mapping, is the CLI itself.

Field descriptions

The following table describes field names, subfield names, and valid data ranges for table VARCLI.

Field	Subfield or refinement	Entry	Explanation and action
VCLIDX		1 to 15	VARIABLE CLI INDEX. Enter the digit length of the CLI to be found.
CLIDATA		see subtable CLIDATA	CLI subtable. This field indexes the CLIDATA subtable. Refer to VARCLI.CLIDATA for more information.

Datafill example

The following example shows datafill for table VARCLI.

```
VCLIDX CLIDATA
_____________

1 (1)
2 (1)
3 (1)
```

VARCLI (end)

Table history

UCS06

Table VARCLI is created.

VPNFGD

Table name

Virtual Private Network on Feature Group D (VPNFGD) table

Functional description

Table VPNFGD enhances the equal access network trunk (EANT) trunk group call processing to accommodate equal access and other types of traffic over a “shared" FGD trunk. This mixed traffic distinguishes the ANI information digits provided by the operating company as part of the FGD signaling protocol.

If a call is not allowed based on the COS table index of the received ANI (in other words, the ANIs COS is exceeded), the switch uses the ANI originating partition (OPART) to index into the VPNFGD table. Table VPNFGD determines whether class of service override is allowed.

If a call is allowed, the calling party is prompted for an authcode followed by a PIN and account code, if required. After the switch validates the authcode, optional PIN, and account code, regular call processing continues.

If COS override is not allowed, the call receives class of service exceeded treatment.

Table size

Table VPNFGD contains up to 801 tuples.

Memory requirements

Table VPNFGD statically allocates for the maximum number of tuples. Each tuple uses 1 word of data store.

NT-40-1 word * 801 tuples + 3 words overhead = 804 words total Supernode-1 word * 801 tuples + 4 words overhead = 805 words total

VPNFGD (end)

Field descriptions

The following table describes field names, subfield names, and valid data ranges for table VPNFGD.

Field	Subfield or refinement	Entry	Explanation and action
OPART		0 to 999	ORIGINATING PARTITION NUMBER. Enter the OPART number that indexes into this table.
COSOVE		Y or N	CLASS OF SERVICE OVERRIDE. Enter Y to allow class of service override. Enter N to disallow class of service override.
ADIN		0 to 99	AUTHCODE DATABASE INDEX NUMBER. This field indexes into the appropriate range for validation.

Datafill example

The following example shows datafill for table VPNFGD.

```
OPART    COSOVE    ADIN
_____________________
   111         Y       1
```

VRINV

Table name

Version Registry Inventory (VRINV) Data Table.

Functional description

Table VRINV provides read-only software versioning information by product, load, layer, and fuction. The VRINV table replaces table BCS Number Equivalent Viewable Parameters.

Datafill sequence and implications

Table VERSIONS must be datafilled before table VRINV.

All other tables must be datafilled after table VRINV.

Table size

Minimum size: 6 x 14 words per tupleMaximum size: 1100 x 14 words per tuple.

Datafill

The following table lists the datafill for table VRINV.

Field descriptions

Field	Subfield or refinement	Entry	Explanation and action
VUNAME		alphanumeric 1 to 32 characters.	CLASS = PRODUCTThis field contains the Nortel-defined product name stripped of the version information.CLASS = LOADThis field containsthe first four characters of the eight character product computer module (CM) load's ordering code.CLASS= LAYERThis field contains the predefined layer name stripped of the version and edition information.CLASS= FUNCTIONThis field contains the Nortel-defined runtime software function name.

VRINV (continued)

CLASS = PRODUCT

The following table lists the datafill for table VRINV when the entry in subfield CLASS = PRODUCT.

Field descriptions

Field	Subfield or refinement	Entry	Explanation and action
ADMIN		NIL	This field is not used at this time.
VERTAB	VERSION	-1 to 999	This field identifies the active PRODUCT version code.
	LOCATION	node id unit id	This field contains the Location Node identification code (NIL or CM) and the Location Unit Number identification code (0 or 1).

CLASS = LOAD

The following table lists the datafill for table VRINV when the entry in subfield CLASS = LOAD.

Field descriptions

Field	Subfield or refinement	Entry	Explanation and action
TARGET		alphanumeric (1 to 32 characters)	This field identifies the Motorola 68K-family loadbuild environment used. Entries may be M68K, M68SNSE, M88K, or M88SNSE.
LCF		alphanumeric (1 to 32 characters)	This field identifies the version and edition of the software used in the control file loadbuild.
ADMIN		NIL	This field is not used at this time.
VERTAB	VERSION	-1 to 999	This field identifies the active LOAD version code.
	ISSUE	alphanumeric (1 to 3 characters)	Identifies the active LOAD issue number.
	LOCATION	node id unit id	This field contains the Location Node identification code (NIL or CM) and the active Location Unit Number identification code (0 or 1).

CLASS = LAYER

The following table lists the datafill for table VRINV when the entry in subfield CLASS = LAYER.

Field descriptions

Field	Subfield or refinement	Entry	Explanation and action
ADMIN		NIL	This field is not used at this time.
VERTAB	VERSION	-1 to 999	This field identifies the active LAYER version code.
	SIB-VERSION	-1 to 999	This field identifies the active LAYER sub-version code.
	LOCATION	node id unit id	This field contains the Location Node identification code (NIL or CM) and the active Location Unit Number identification code (0 or 1).

CLASS=FUNCTION

The following table lists the datafill for table VRINV when the entry in subfield CLASS = FUNCTION.

Field descriptions

Field	Subfield or refinement	Entry	Explanation and action
ADMIN		NIL	This field is not used at this time.
VERTAB	VERSION	-1 to 999	This field identifies the active FUNCTION version code.
DATA		Eight character alphanumeric	This field contains the eight character alphanumeric function code.
	LOCATION	node idunit id	This field contains the Location Node identification code (NIL or CM) and the active Location Unit Number identification code (0 or 1).

Datafill example

The following example shows sample datafill for table VRINV.

VRINV (end)

MAP display example for table VRINV

```
> lis all
TOP
VUKEY                                                    CLASSVAR
_____________________________________________________________________
           LEC0
PRODUCT NIL (9 CM UNIT_1)$
           LEC00
LOAD M88K US_NA100.BB01 NIL (9 000 CM UNIT_1)$
           BAS
LAYER NIL (100 43 CM UNIT_1)$
           TL
LAYER NIL (90 27 CM UNIT_1)$
           SHR
LAYER NIL (90 64 CM UNIT_1)$
           LOAD_CONTEXT_MAPID
FUNCTION DMS_VERSIONING_PLATFORM (44 00005841 CM UNIT_1)$
            DSCWID
FUNCTION CALL_WAITING_DELUXE (1 00000000 CM UNIT_1)$
            C7MTCE
FUNCTION CCS7_SERVICES (5 00000000 CM UNIT_1)
            VERSION_REGISTRY
FUNCTION DMS_VERSION PLATFORM (2 00000000 CM UNIT_1)$
BOTTOM
>quit
```

Table history

Table VRINV was introduced in TL06.

Table VRINV was updated in NA009.

VPROMPTS

Table name

Voice Prompts (VPROMPTS) table

Functional description

Table VPROMPTS allows customers dialing a universal access (UA) number to receive user-friendly voice prompts. The voice prompts instruct the subscriber about using the Mechanized Calling Card Service (MCCS).

The voice prompts may include the following information:

- dialing the address
- calling card number
- entering account code digits
- misdialing digits
- dialing incomplete numbers
- dialing incorrect numbers
- dialing no numbers

The UCS DMS-250 switch uses only FGC Universal Access, FGD Universal Access (PTS and SS7), Pure FGD signaling, and SS7 IMT UA trunks for voice prompting.

Datafill sequence and implications

Datafill table ANNS before table VPROMPTS. VPROMPTS field PRPTCLLI uses CLLI table names. Table DRAMTRK field PRTCLLI must be datafilled with the CLLI announcement or the call routes to a Storage Overflow Recorder (SORD) treatment. Since voice prompts are dependent on DRAMS, announcements must be provisioned in table DRAMS, ANN, ANNMEMS, and DRAMTRK.

Table size

Table VPROMPTS supports upto a maximum of 1024 MCCS UA VPROMPT announcement sets.

VPROMPTS (continued)

Field descriptions

The following table describes field names, subfield names, and valid data ranges for table VPROMPTS.

(Sheet 1 of 3)

Field	Subfield or refinement	Entry	Explanation and action
KEY			VOICE PROMPTS KEY. This field consists of a two-part multiple: VPIDX_KEY and ANNOU_KEY.
	VPIDX_KEY	0 to 1023	VOICE PROMPT INDEX. Enter an index to identify a collection of voice prompts. These voice prompts are also identified in table STDPRTCT. ***Note:*** All required UA announcements must be datafilled with a VPIDX of zero. Non-zero values of VPIDX do not need a complete collection of announcements, since any announcement will default to the one associated with a VPIDX of 0.
	ANOU_KEY		VOICE PROMPT IDENTIFICATION NAME. Enter the PROMPTID indexes into this table. Voice prompts are active or passive. Active voice prompts allow subscriber dialing while the prompt plays.
		UAGREET	*Active voice prompts* : UAGREET=universal access (UA) greeting
		UAADDR	UAADDR=UA address
		UATCN	UATCN=UA calling card number
		PFGDREORIG	PFGDREORIG=pure FGD reorigination
		INVTCN	INVTCN=invalid calling card number
		PARTIALTCN	PARTIALTCN=1st partially dialed calling card number
		ACCOUNT	ACCOUNT=message instructing dialer to enter an account code

VPROMPTS (continued)

(Sheet 2 of 3)

Field	Subfield or refinement	Entry	Explanation and action
		CCAP	CCAP=calling card prompt for the dialer to enter a card number or 0 for operator-assistance
		LCNV	LCNV=calling card not valid prompt for the dialer to re-enter a valid calling card number
		FDNZ	FDNZ=first digit not zero
		CCNV	CCNV=calling card not valid
		CCTO	CCTO=calling card timeout
		INVADDR	INVADDR=invalid address
		PARTIALAC	PARTIALAC=partial account code dialing
		INVAC	INVAC=invalid account code dialing ***Note 1:*** FDNZ can only be interrupted with an asterisk. ***Note 2:*** CCAP, LCNV, LECV, and PFGDREORIG are announcements for pure FGD calls only.
		FAILTCN	*Passive voice prompts:* FAILTCN=second partial or invalid calling card number failed
		OPERATOR	OPERATOR=message before call routes to an operator
		CONFIRMATION	CONFIRMATION=message indicating subscriber entered a valid number
		LECV	LECV=LEC calling card number valid

VPROMPTS (end)

(Sheet 3 of 3)

Field	Subfield or refinement	Entry	Explanation and action
PRPTCLLI		CLLI datafilled in table ANNS	VOICE PROMPT COMMON LANGUAGE IDENTIFIER. Enter any announcement CLLI from table ANNS.
PSIGTIME		0 to 30	VOICE PROMPT PERMANENT SIGNAL TIME. Enter the permanent signal timer that overrides the PSIG timer in table TRKSGRP. This timer starts after the voice prompt plays. Enter a value of greater than 0 for active voice prompts. Enter 0 for passive voice prompts.

Datafill example

The following example shows sample datafill for table VPROMPTS.

```
      KEY     PRPTCLLI     PSIGTIME
_____________________________________________________
0 UAGREET   UAGREETANN       10
0 OPERATOR  OPERATORANN      0
```

Table history

UCS09

Updated field VIPIDX_KEY to support 1024 sets of announcements (AX0964).

UCS06

Updated for MCCS voice prompts enhancements.

VCHIDTAB

Table name

Virtual Channel Identifier table

Functional description

Table VCHIDTAB is used for preserving the relationship between integrated link maintenance (ILM) virtual channels and pairs of access identifiers over BCS applications.

Direct access to the table is restricted. The customer has read only access. Indirect access is permitted through datafilling of a device requiring ILM supported resources, or as part of a restore operation on the N + 1 BCS as part of a BCS application.

Datafill sequence and implications

Not applicable because the table is write protected against direct datafill.

Table size

From 0 to 2048 tuples. Table size is dynamically determined by the number of tuples.

Datafill

Field descriptions (Sheet 1 of 3)

Field	Subfield or refinement	Entry	Explanation and action
VCHID		see subfields	*Virtual channel identifier*The tuple is a unique identifier that ILM uses to identify a virtual channel (VCh). A VCh connects two access identifiers. An access identifier further refines the concept of access key and access identifier by specifying a channel on an access. The VCHID field is a multiple with two parts: EPT_KEY and INDEX.
	EPT_KEY	0 to 2047	*Endpoint key*This subfield contains a unique identifier that ILM uses to identify a pair of access keys that are connected by ILM transport resources.

VCHIDTAB (continued)

Field descriptions (Sheet 2 of 3)

Field	Subfield or refinement	Entry	Explanation and action
	INDEX	0 to 127	*Endpoint index*If there is more than one transport resource between two access keys, the endpoint index is used to differentiate between them.
ACID1		see subfields	*Access identifier one*The first of a pair of access identifiers between which the virtual channel runs. This tuple is a multiple with three parts: KEY, INDEX, and CHANNEL
	KEY	0 to 1023	*Access key*The access key part of the access identifier.
	INDEX	0 to 1023	*Access index*The access index part of the access identifier.
	CHANNEL	0 to 1023	*Access channel*The access channel part of the access identifier.
ACID2		see subfields	*Access identifier two*The second of a pair of access identifiers between which the virtual channel runs. This tuple is a multiple with three parts: KEY, INDEX, and CHANNEL
	KEY	0 to 1023	*Access key*The access key part of the access identifier.
	INDEX	0 to 1023	*Access index*The access index part of the access identifier.
	CHANNEL	0 to 1023	*Access channel*The access channel part of the access identifier.
VCCVCH1		see subfields	*Virtual channel controller* and *local virtual channel* for access key 1.This tuple is a multiple with two parts: VCC and LVCH.
	VCC	0 to 63	*Virtual channel controller*
	LVCH	0 to 511	*Local virtual channel*
VCCVCH2		see subfields	*Virtual channel controller* and *local virtual channel* for access key 2.This tuple is a multiple with two parts: VCC and LVCH.
	VCC	0 to 63	*Virtual channel controller*

Field descriptions (Sheet 3 of 3)

Field	Subfield or refinement	Entry	Explanation and action
	LVCH	0 to 511	*Local virtual channel*
LKEY1		0 to 255	*Local virtual channel endpoint key one*
LKEY2		0 to 255	*Local virtual channel endpoint key two*

Datafill example

The following example shows sample datafill for table VCHIDTAB.

MAP display example for table VCHIDTAB

```
VCHID    ACID1    ACID2    VCCVCH1  VCCVCH2  LKEY1  LKEY2
_____________________________________________________________

 0 0     0 0 0    1 0 0     0   0     0   0     0      0
 1 0     1 0 0    2 1 0     1   0     0   0     0      0
 2 1     3 1 0    2 1 0     2   0     0   0     1      0
```

Table history

BCS26

Table VCHIDTAB was introduced.

Supplementary information

Table VCHIDTAB must be restored before any of the inventory tables of the devices that require ILM resources. Currently, these tables are APINV, LIMINV, LIUINV, and NIUIV. It is recommended that this table immediately follow tables PLATAB and TAPIDTAB.

XAFWLOAD

Table name

XA-Core firmware load table.

Functional description

The table XAFWLOAD stores the following information:

- firmware (FW) load file locations and names
- field replaceable unit (FRU) product equipment codes (PEC)
- FW soak times
- valid FW versions

Field LOADTYPE is added. The entry may either be FW, DLL. FW indicates Firmware ROM type. DLL indicates Firmware Downloadable Load, and is applicable to the HIOP.

The system uses table XAFWLOAD to control firmware versions and to detect a firmware version mismatch.

Datafill sequence and meaning

There is no requirement to enter datafill into other tables before table XAFWLOAD.

Table size

0 to 40 tuples.

Datafill

The table that follows lists datafill for table XAFWLOAD.

Field descriptions

Field	Subfield	Entry	Explanation and action
INDEX	none	1 to 40	Tuple entry ID in table XAFWLOAD.
FRU	none	PE, IOP or CMIC	Indicates the type of card or packlet.
PEC	none	alphanumeric (8 characters)	Indicates the product equipment code (PEC).
VERSION	none	alphanumeric (up to 8 characters)	Indicates the FW version.
VOLUME	none	alphanumeric (up to 20 characters)	Indicates the volume name.

XAFWLOAD (continued)

Field descriptions

Field	Subfield	Entry	Explanation and action
FILE	none	alphanumeric (up to 32 characters)	Indicates the file name.
LOADTYPE	none	0 to 40	Tuple entry ID in table XAFWLOAD
STATUS	none	new, current or old	The system uses the status entry to indicate which volume and filename to retrieve when executing the LoadFW command. All tuples have a unique combination of FRU, PEC and STATUS except when status = OLD.
SOAK	none	0 to 240	Indicates the time period in hours that the system soaks the firmware. For HIOP DLL entries, soak time of 0 sould be used. The default entry is 48.

Datafill example

The figure that follows shows sample datafill for table XAFWLOAD.

```
INDEX  FRU PEC      VERSION  VOLUME      FILE     LOADTYPE  STATUS   SOAK

1     PE   NTLX02AA XAPE01AC F02LFWLOADS PEFW413  FW        old      48
2     PE   NTLX02AA XAPE01AF F02LFWLOADS PEFW421  FW        current  48
3     PE   NTLX02AA XAPE01BA F02LFWLOADS PEFW424  FW        new      48
4     IOP  NTLX03AA XAIO01AA F02LFWLOADS ISEFW41  FW        old       0
5     IOP  NTLX03AA XAIO01AC F02LFWLOADS ISEFW44  FW        current   0
6     CMIC NTLX05AA OC06PK22 F02LFWLOADS 0C3FW75  FW        current  72
7     AMDI NTLX05AA OC06PK47 F02LFWLOADS 0C3FW87  FW        current  36
8     ETHR NTLX09AA EP14DO03 F02LFWLOADS EP14DO03 FW        current  48
9     HIOP NTLX04AA XHIO01YC F02LFWLOADS NTLX01YC FW        current  48
10    HIOP NTLX04AA XHIO01YD F02LFWLOADS XHIO01YD DLL       current   0
```

XAFWLOAD (end)

Table history

BAS17

Field LOADTYPE is added in BAS17. This field only applies to BAS17 and above.

BAS14

Table XAFWLOAD is added in BAS14.

Additional information

Table XAFWLOAD does not use translation verification tools.

If the system cannot find a matching entry in table XAFWLOAD with the version of firmware currently running, it will create a tuple in the table. Since it is unknown if there is a volume and filename where this firmware load exists, the newly created tuple is created with the default values of unknown_volume_name and unknown_file_name. Tuples with the default value may fail a TABAUDIT, and hence a TABXFER. It is the responsibility of the craftsperson to manually edit this tuple and specify the correct volume name and file name where this load resides.

Refer to your FRU specific IM for additional information. For example, the IM upgrading the IOPs, “Upgrade XA-Core IOP Packs/Packlets to NTLX03AB, NTLX5AB, and NTLX3BB”, IM# 65-6171 refers to the NTP 297-8991-510 “DMS-100 Family XA-Core Maintenance Manual”, section entitled “Upgrade firmware on an xa-core component” which outlines the procedure in detail.

XFERADDR

Table name

Data Transferal Table

Functional description

The data transferal system permits an operating company to transfer information concerning the operation of a DMS-100 Family switch to its data processing center. Normally, two types of information can be requested: billing information, in the form of automatic message accounting (AMA) data, and operational measurements (OM) data. Other types of data can also be handled. Data is contained on storage devices at the DMS switch.

Data transfer is structured by operating company personnel through commands at the DMS-100 switch. Data transferal is effected through a digital data packet switching network, such as DATAPAC.

Table XFERADDR stores the addresses from which XFER can accept requests for information. Table XFERADDR contains the following information:

- the index number of the tuples in the table
- the unit number for either the multiprotocol controller (MPC) or data packet controller (DPC) used for data transmission
- the MPC link used for data transmission

Table XFERADDR is initially datafilled by Northern Telecom support personnel during installation. The table can be modified by operating company personnel using the table editor (see the *Basic Translations Tools Guide*).

Datafill sequence and implications

Table GLADEV must be datafilled before table XFERADDR.

Note: Table GDLADEV identifies specific application devices that XFER uses. Table GDLADEV must be datafilled with either MPC or DPC before table XFERADDR can be datafilled. If changing transmission protocols for an application (such as changing to the MPC after the DPC is datafilled), all tuples in table XFERADDR must be deleted before table GDLADEV can be changed.

Table size

Memory for table XFERADDR is automatically allocated for 64 entries. This allocation cannot be changed.

XFERADDR (continued)

Datafill

The following table lists datafill for table XFERADDR.

Field descriptions (Sheet 1 of 2)

Field	Subfield or refinement	Entry	Explanation and action
INDEX		see subfield	*Data transfer address key* This field consists of subfield K. This is the key to the table.
	K	0 to 63	*Table index* Enter an integer value for the table index. This number serves as an index to the tuples in the table. There is no default value.
UNIT		integer (0 to 255 or 0 to 15 [see note])	*Unit number* These values are obtained from table MPC or table DPACNUM. If the multiprotocol controller (MPC) is datafilled in table GDLADEV, values for this field are limited to 0 to 255. If the data packet controller (DPC) is datafilled in table GDLADEV, values for this field are limited to 0 to 15. ***Note:*** Canada only Any entry outside the range indicated for this field is invalid. There is no default value.

Field descriptions (Sheet 2 of 2)

Field	Subfield or refinement	Entry	Explanation and action
LINK		intege r(-1, 2, or 3)	*Link number* Entry values 2 and 3 are currently the only values that can be entered for the MPC. If the DPC is datafilled in table GDLADEV, the value for the LINK field must be -1. Values other than -1 (MPC) and 2 or 3 (DPC) are not valid. There is no default value.
ADDRESS		numeric (8 to 15 digits)	*Data network address* Enter a minimum of eight digits for the data network address. Data network addresses that are used for MPC card connections must be unique and cannot also appear in table NOPADDR. There is no default address.

Datafill example

The following example shows sample datafill for table XFERADDR.

Field INDEX shows the tuple position in the table as 1. Field UNIT shows that DPC 14 is datafilled. Field LINK is -1, the only possible value when the DPC is datafilled in table GDLADEV. The data number address assigned to this DPC and link (16134700010) is the final value.

MAP display example for table XFERADDR

```
INDEX   UNIT   LINK         ADDRESS
_____________________________________________________________

    1     14     -1     16134700010
```

Table history

BCS36

Field INDEX was separated into field INDEX and subfield K.

XFERSSYS

Table name

Transfer Subsystem Table

Functional description

Table XFERSSYS holds information about each Device Independent Recording Package (DIRP) subsystem from which data can be transmitted using the transfer (XFER) utility. Table XFERSSYS is an added external table that stores information previously entered using table editor commands. Table editor commands are used to add, delete, and modify tuples in table XFERSSYS.

Table XFERSSYS contains the subsystem name, protocol identification, and function key number (if these are specified). The key to the table is the subsystem name (field SSNAME). This key is the same as the key for table DIRPSSYS.

Datafill sequence and implications

Datafill table DIRPSSYS before table XFERSSYS.

Table size

0 to 23 tuples

Datafill

The following table lists datafill for table XFERSSYS.

Field descriptions (Sheet 1 of 2)

Field	Subfield or refinement	Entry	Explanation and action
SSNAME		see subfield	*XFER subsystem key* This field consists of subfield K.
	K	alphanumeric (1 to 4 characters)	*Subsystem name* Enter a name to identify the subsystem to the Device Independent Recording Package (DIRP). Subsystem names must be datafilled in table DIRPSSYS before they can be entered in this field.

Field descriptions (Sheet 2 of 2)

Field	Subfield or refinement	Entry	Explanation and action
PROTCLID		numeric (1 to 255)	*Protocol identification* This is the transferal protocol identification (ID) number. With the XFER (transfer) utility, the poller supplies the hexadecimal version of the protocol ID number in its Start Conversation message. Enter the decimal equivalent of this number.
FKEY		F13 F14 F15 F16 F17 F18, or FNONE	*Function key* Enter the function key that is required to represent the subsystem at the XFER level of the MAP. Keys F13 to F18 can be defined for subsystems by using this table. The entry for the defined subsystem does not appear in the menu until the user exits and re-enters the XFER level of the MAP. Enter FNONE if no function key is specified for this subsystem and no entry appears on the menu.

Datafill example

The following example shows sample datafill for table XFERSSYS.

MAP display example for table XFERSSYS

```
SSNAME PROTCLID  FKEY
_____________________________________________________

   OM         3   F15
  AMA         1   F13
```

Table history

BCS36

Field SSNAME was separated into field SSNAME and subfield K.

XFERSSYS (end)

Supplementary information

This section provides information on dump and restore procedures when datafilling table XFERSSYS.

Dump and restore

Dump and restore procedures in table XFERSSYS rebuild the information between BCS loads. This ensures that information created previously is not lost when a new BCS load is initiated.

XLAPLAN

Table name

XLAPLAN

Functional description

Feature AU3279, LINEATTR Servord Enhance ments, splits table LINEATTR (Line Attribute) into three tables to make data management easier:

- LINEATTR
- XLAPLAN
- RATEAREA

Table XLAPLAN receives initial datafill in a one night process (ONP) from table LINEATTR. If a specific tuple from table LINEATTR results in a tuple that exists in table XLAPLAN, the tuple is not added to table XLAPLAN and the XLAPLAN key copies back to table LINEATTR. If a specific tuple from table LINEATTR does not result in a tuple that exists in table XLAPLAN, the tuple is added to table XLAPLAN and the XLAPLAN key copies back to table LINEATTR.

Note: You can delete the tuples in table XLAPLAN that other tables do not reference.

The LINEATTR Compression Tool feature (59017776) checks for duplicate tuples during the ADD, CHA, and REP commands. A warning message appears before the confirmation to provide an alert of a duplicate tuple. The message only generates with the OFCVAR table parameter XLAPLAN_RATEAREA_SERVORD_ENABLED (XRSE) set to MANDATORY_PROMPTS. This warning does not prevent datafill validation.

Datafill sequence and implications

The following tables must be datafilled before table XLAPLAN:

- CUSTENG
- SUBGRP
- NCOS

- SCRNCLAS
- SNPANAME
- POSNAME
- STDPRTCT

Table size

The maximum size of the XLAPLAN table is 32 000 tuples.

Datafill

The following table lists datafill for table XLAPLAN.

Field descriptions (Sheet 1 of 2)

Field	Subfield	Entry	Explanation and action
XLAPIDX		alphanumeric (up to 16 characters)	XLAPLAN log key. Enter the index into table XLAPLAN
SCRNCL		alphanumeric (up to 4 characters) or NSCR	Screening class. If screening by class of service is required, enter the name of the class of service subtable assigned to the LINEATTR key. If screening by class of service is not required, enter NSCR.
HSTS		numeric (0 to 999)	Serving translation scheme. Enter the serving numbering plan area (SNPA) assigned to the LINEATTR key. The HSTS of an existing tuple cannot be changed.
PRTNM		alphanumeric (up to 4 characters) or NPRT	Pretranslator name. If pretranslation of digits is required, enter the name of the standard pretranslator subtable assigned to the LINEATTR key. If standard pretranslation is not required, enter NPRT.
ZEROMPOS		alphanumeric (up to 10 characters) or NONE	Zero minus position. If a LINEATTR is configured for operator (0-) and special toll (0+) dialing, enter the position in the position table to which operator (0-) calls are routed. Otherwise, enter NONE.

Field descriptions (Sheet 2 of 2)

Field	Subfield	Entry	Explanation and action
RESINFO		Y, N	Residential enhanced services information.. Enter Y (yes) if the LINEATTR key is required to support RES lines (the LCC must be 1FR, 1MR, OWT, EOW, INW, 2WW, ETW, CCF, CDF, CFD, CSP, ZMD, or ZMZPA). Datafill subfields refinements CUSTGRP, SUBGRP, and NCOS. Otherwise, enter N (no), and leave CUSTGRP, SUBGRP, and NCOS blank.
	CUSTGRP	alphanumeric (up to 16 characters)	Customer group. Enter the customer group name assigned to the LINEATTR key. This name must appear in table CUSTENG field CUSTNAME.
	SUBGRP	numeric (0 to 7)	Customer subgroup. Enter the subgroup within the customer group associated with the LINEATTR key. This subgroup must appear in table SUBGRP.
	NCOS	numeric (0 to 511)	Network class of service. Enter the network class of service (NCOS) number in the customer group associated with the LINEATTR key. This number must appear in table NCOS field NCOS.
OPTIONS		SECDT or $	Second dial tone. Enter SECDT to enable a secondary dial tone for wireless features that require that the subscriber enter more digits. Enter $ to end the option entry.
ADMININF		alphanumeric (up to 32 characters)	Administration information. Enter any string containing alphabetic characters, numeric characters, or underscores up to 32 characters. This entry provides a short explanation or note regarding the use of the LINEATTR tuple. The operating company defines the content of this entry.

Datafill example

The following examples show sample datafill for table LINEATTR and table XLAPLAN.

MAP display example for table LINEATTR (pre NA011)

```
LNATTIDX LCC CHGCLSS COST SCRNCL LTG STS PRTNM LCANAME
ZEROMPOS TRAFSNO MRSA
SFC LATANM MDI IXNAME DGCLNAME FANIDIGS RESINFO OPTIONS
0 1FR NONE NT FR01 0 613 P621 L613 TSPS 10 NIL NILSFC
LATA1 0 NIL NIL 00 N $
```

MAP display example for table LINEATTR (NA011)

```
LNATTIDX LCC CHGCLSS COST LTG TRAFSNO SFC MDI IXNAME
DGCLNAME FANIDIGS DFLTXLP DFLTRA OPTIONS
0 1FR NONE NT 0 10 NILSFC 0 NIL NIL 00 613_P621_0
L613_LATA1_0 $
```

MAP display example for table XLAPLAN (NA011)

```
XLAP1DX SCRNCL  HSTS  PRTNM  ZEROMPOS  RESINFO  OPTIONS ADMININF
613_P621_0 FR01    613    P621    TSPS      N     SECDT    $
```

Table history

NA014

The LINEATTR Compression Tool feature (59017776) checks for duplicate tuples during the ADD, CHA, and REP commands. A warning message appears before the confirmation to provide an alert of a duplicate tuple. The message only generates with the OFCVAR table parameter XLAPLAN_RATEAREA_SERVORD_ENABLED (XRSE) set to MANDATORY_PROMPTS.

LWW0006

Feature 59010108, Line Data and SERVORD Fold-in, incorporated table XLAPLAN into DMS-100 Wireless.

Feature 59005842, Second Dial Tone for Wireless Services, added field Option.

NA011

Table XLAPLAN table was introduced in NA011.

XPMLFP

Table name

XPM Loadfile Patching Table

Functional description

Table XPMLFP stores data used by the computing module (CM) to automatically schedule loadfile patching. Table XPMLFP sets up parameters for extended multiprocessor system (XMS)-based peripheral module (XPM) loadfile patching for each CM.

Datafill sequence and implications

Table PMLOADS must be datafilled before table XPMLFP.

Table size

1 tuple

Datafill

The following table lists datafill for table XPMLFP.

Field descriptions (Sheet 1 of 2)

Field	Subfield or refinement	Entry	Explanation and action
XLFPKEY		XPMLFP	*Key to table XPMLFP* Enter XPMLFP.
SOAK		1 to 365	*Soak* Enter the number of days a patch is applied to an XPM before it is applied to the loadfile. The default value for this field is 12 (12 days).
TIME		see subfields	*Time* This field consists of subfields HOUR and MINUTE.
	HOUR	0 to 23	*Hour* Enter the hour at which loadfile patching begins. The default value for this field is 3 (3:00 a.m.).

XPMLFP (end)

Field descriptions (Sheet 2 of 2)

Field	Subfield or refinement	Entry	Explanation and action
	MINUTE	0 to 59	*Minute* Enter the minute after the hour specified in field HOUR at which loadfile patching begins. The default value for this field is 15 (15 min).
WORKVOL		alphanumeric (up to 16 characters)	*Workspace volume* Indicate in this field which volume to use for workspace. Enter the set of disk drive unit (DDU) volumes and system load module (SLM) disks that are available to the CM. ***Note:*** Working files associated with XPM loadfile patching are deleted when XPM loadfile patching completes or aborts. The default value for this field is UNKNOWN.

Datafill example

The following example shows sample datafill for table XPMLFP.

MAP display example for table XPMLFP

```
XLFPKEY SOAK  TIME          WORKVOL
_____________________________________________________________

 XPMLFP   12  3 15          UNKNOWN
```

Table history

BCS36

Table XPMLFP was introduced (in accordance with feature AF5004).

WZONE

Table name

World Zone One (WZONE) table

Functional description

Table WZONE identifies calls to World Zone One area codes that require the generation of a NETS601 log. The NPA in the called number is compared with customer-provisioned Numbering Plan Area (NPA) values datafilled in this table. If a match is found, a NETS601 log is generated. This is applicable to FGD, PRI, and DAL originating or two-way trunk groups.

Table size

The maximum size of table WZONE is 800 NPA tuples, 640,000 NPA-NXX tuples and 6, 400, 000, 000 NPA-NXX-XXXX tuples for a total of upto 6, 400, 640, 800 tuples.

Field descriptions

The following table describes field names, subfield names, and valid data ranges for table WZONE.

Field	Subfield or refinement	Entry	Explanation and action
KEY		A valid entry of 3, 6, or 10-digits	KEY Enter 3, 6, or 10-digit numbers. The NPA and NXX of these numbers must be in the range of 200-999.

Datafill example

The following example shows datafill for table WZONE.

```
Key
```

Table history

UCS09

Updated WZ1NPA field to Key field (AX0980).

ZZY2NPA

Table name

00Y to Numbering Plan Area (ZZY2NPA) table

Functional description

Table ZZY2NPA associates the numbering plan area (NPA) of a calling party with the 00Y digits received by the tandem switch over a FGC ONAT trunk group.

The inter-exchange carrier uses this NPA for originator NPA screening and banded billing for INWATS calls. Restricted originations occur when a specified INWATS subscriber does not want to receive calls from certain NPA areas. Banded billing occurs when the party receiving the INWATS calls pays a different rate based on the calling party location.

INWATS 800 calls block all non-FGC ONAT and FGD EANT trunk groups through the use of table STDPRT. Table ZZY2NPA is accessed only for INWATS calls originating over a FGC call processing agency.

This table translates the 00Y digits received on an INWATS FGC call into an originating NPA for each trunk group. The 00Y internally strips off the digits and replaces them with “800" so that proper translations and routing can be performed.

Datafill sequence and implications

Datafill table CLLI before datafilling this table. When deleting a CLLI name from the database, delete it from this table before deleting it from the CLLI table. Failure to delete entries from table ZZY2NPA before deleting them from table CLLI can corrupt table ZZY2NPA.

Table size

The maximum table size is 80,950 tuples.

Memory allocation

The general store formula for table ZZY2NPA is as follows:

2054 words + (10 words x [number of CLLIs datafilled rounded to nearest 10])

Field descriptions

The following table describes field names, subfield names, and valid data ranges for table ZZY2NPA.

Field	Subfield or refinement	Entry	Explanation and action
KEY			KEY. This field consists of a 2-part key: CLLI and Y.
	CLLI	CLLI datafilled in table CLLI	COMMON LANGUAGE LOCATION IDENTIFIER. Enter the CLLI name of the FGC trunk group requiring 00Y to NPA conversion.
	Y	0 to 9	Y DIGIT OF 00Y. Enter a value ranging 0-9 representing the NPA of the subscriber making the INWATS call. ***Note:*** The exchange carrier notifies the operating company of the mapping from Y digits to NPAs. For any particular FGC trunk group facility, each Y digit can represent only one NPA.
NPA		3 digits (0-9, B-F, N)	NUMBERING PLAN AREA. Enter a 3-digit number in the following form to be associated with the specific CLLI name and Y digit representing the NPA where the INWATS call originates. N X (N = 2-9 and X = 0-9). This field can also be datafilled in the NXX format when N is a number between 2 and 9, and when X is a number between 0 and 9.

Datafill example

The following example shows datafill for table ZZY2NPA.

```
                    KEY  NPA
_____________________________
ONT535TWMFWK        3    213
```

Digital Switching Systems

UCS DMS-250

Data Schema Reference Manual Volume 5 of 5

Copyright © 1998-2001 Nortel Networks,
All Rights Reserved

NORTEL NETWORKS CONFIDENTIAL: The information contained herein is the property of Nortel Networks and is strictly confidential. Except as expressly authorized in writing by Nortel Networks, the holder shall keep all information contained herein confidential, shall disclose the information only to its employees with a need to know, and shall protect the information, in whole or in part, from disclosure and dissemination to third parties with the same degree of care it uses to protect its own confidential information, but with no less than reasonable care. Except as expressly authorized in writing by Nortel Networks, the holder is granted no rights to use the information contained herein.

Nortel Networks, the Nortel Networks logo, the Globemark, How the World Shares Ideas, and Unified Networks are trademarks of Nortel Networks.

Publication number: 297-2621-851
Product release: UCS15
Document release: Standard 09.02
Date: June 2001
United States of America

NORTEL NETWORKS™

How the world shares ideas.